REPUBLIC OF KENYA

KENYA RURAL ROADS AUTHORITY

BUNGOMA REGION

ROUTINE & SPOT IMPROVEMENT WORKS

ROAD: C807 (A104 NAMBUCHI - NAKHWANA - MUYENGA - C807 MYANGA)

TENDER NO: KeRRA/011/BGM/39/BML-22%RMLF SAVINGS/2-52-18|19-537

BUMULA CONSTITUENCY

BID DOCUMENT FOR ROUTINE & SPOT IMPROVEMENT

- **INVITATION FOR TENDERS**
- **INSTRUCTIONS TO BIDDERS**
- **QUALIFICATION CRITERIA**
- **CONDITIONS OF CONTRACT**
- **APPENDIX TO FORM OF AGREEMENT**
- **STANDARD FORMS**
- **SPECIFICATIONS, DRAWINGS AND BILLS OF QUANTITIES**

JULY, 2019

THE REGIONAL MANAGER, **KENYA RURAL ROADS AUTHORITY,** **BUNGOMA REGION,** **P. O. BOX 1473 - 50200** **BUNGOMA, KENYA**	**THE DIRECTOR GENERAL,** **KENYA RURAL ROADS AUTHORITY,** **P. O. BOX 48151 – 00100,** **NAIROBI, KENYA**

STANDARD TENDER DOCUMENT

FOR

PROCUREMENT OF WORKS

- ROUTINE & SPOT IMPROVEMENT WORKS

TABLE OF CONTENTS

CONTENTS **PAGE NO.**

SECTION I: INVITATION FOR TENDERS 4

SECTION II: INSTRUCTIONS TO TENDERERS 6

SECTION III: QUALIFICATION CRITERIA 15

SECTION IV: CONDITIONS OF CONTRACT 19

SECTION V: APPENDIX TO FORM OF AGREEMENT 30

SECTION VI: STANDARD FORMS 33

SECTION VII: CONTRACTOR'S EVALUATION CHECKLIST 62

SECTION VIII: SPECIFICATIONS, DRAWINGS AND BILLS OF QUANTITIES 65

SECTION I: INVITATION FOR TENDERS

SECTION II: INSTRUCTIONS TO TENDERERS

TABLE OF CONTENTS

CLAUSE		PAGE.
1 .	GENERAL	8
2.	TENDER DOCUMENTS	10
3.	PREPARATION OF TENDERS	10
4.	SUBMISSION OF TENDERS	12
5.	TENDER OPENING AND EVALUATON	12
6.	AWARD OF CONTRACT	14

INSTRUCTIONS TO TENDERERS.

1. General

1.1 The Employer as defined in the Appendix to Conditions of Contract invites tenders for Works Contract as described in the tender documents. The successful Tenderer will be expected to complete the Works by the Intended Completion Date specified in the said Appendix.

1.2 Tenderers shall include the following information and documents with their tenders, unless otherwise stated:

(a) copies of certificates of registration, and principal place of business;
(b) total monetary value of construction work performed for each of the last five years;
(c) experience in works of a similar nature and size for each of the last five years, and clients who may be contacted for further information on these contracts;
(d) major items of construction equipment owned;
(e) qualifications and experience of key site management and technical personnel proposed for the Contract;
(f) reports on the financial standing of the Tenderer, such as profit and loss statements and auditor's reports for the last five years;
(g) Authority to seek references from the Tenderer's bankers.
(h) Registration with National Construction Authority **Civil Engineering** – **NCA 7 and above** valid at the date of tender of submission
(i) Certificate of Incorporation
(j) VAT Registration Certificate
(k) Valid current Tax compliance certificate
(l) PIN registration certificate
(m) current litigation information

1.3 The Tenderer shall bear all costs associated with the preparation and submission of his tender, and the Employer will in no case be responsible or liable for those costs.

1.4 Bidders participating in the special groups category – AGPO will not provide bid securities, but **MUST** fill and sign the Tender Securing Declaration form as prescribed in the tender document

1.5 The Tenderer, at the Tenderer's own responsibility and risk, is encouraged to visit and examine the Site of the Works and its surroundings, and obtain all information that may be necessary for preparing the tender and entering into a contract for construction of the Works. The costs of visiting the Site shall be at the Tenderer's own expense.

1.6 The procurement entity's employees, committee members, board members and their relatives (spouse(s) and children) are not eligible to participate in the tender.

1.7 There will be no price charged for the tender document it will be downloaded from the official KeRRA Website: www.kerra.go.ke

1.8 The procuring entity shall allow the tenderer to review the tender document free of charge before collection.

2. Tender Documents

2.1 A complete set of tender document comprises the documents listed here below and any addenda issued in accordance with clause 2.4 here below:-

(a) Instructions to Tenderers
(b) Form of Tender
(c) Conditions of Contract and Appendix to Form of Agreement
(d) Specifications
(e) Drawings
(f) Bills of Quantities
(g) Other materials required to be filled and submitted in accordance with these Instructions and Conditions

2.2 The Tenderer shall examine all instructions, forms and specifications in the tender documents. Failure to furnish all information required by the tender documents may result in rejection of his tender.

2.3 A prospective tenderer making inquiries of the tendering documents may notify the Employer in writing or by cable, telex or facsimile at the address indicated in the letter of invitation to tender. The Employer will respond to any request for clarification received earlier than seven [7] days prior to the deadline for submission of tenders. Copies of the Employer's response will be forwarded to all persons issued with tendering documents, including a description of the inquiry, but without identifying its source.

2.4 Before the deadline for submission of tenders, the Employer may modify the tendering documents by issuing an addenda. Any addendum thus issued shall be part of the tendering documents and shall be communicated in writing or by cable, telex or facsimile to all Tenderers. Prospective Tenderers shall acknowledge receipt of each addendum in writing to the Employer.

2.5 To give prospective Tenderers reasonable time in which to take an addendum into account in preparing their tenders, the Employer shall extend, as necessary, the deadline for submission of tenders in accordance with clause 4.2 here below.

3. Preparation of Tenders

3.1 All documents relating to the tender and any correspondence shall be in English Language.

3.2 The tender submitted by the Tenderer shall comprise the following:-

(a) The Tender;

(b) Tender Security; (Where applicable as per the Invitation to Tender)

(c) Priced Bill of Quantities

(d) Any other materials required to be completed and submitted by Tenderers.

3.3 The Tenderer shall fill in rates and prices for all items of the Works described in the Bill of Quantities. Items for which no rate or price is entered by the Tenderer will not be paid for when executed and shall be deemed covered by the other rates and prices in the Bill of Quantities. All duties, taxes and other levies payable by the Contractor under the Contract, as of 30 days prior to the deadline for submission of tenders, shall be included in the tender price submitted by the Tenderer.

3.4 The rates and prices quoted by the Tenderer shall not be subject to any adjustment during the performance of the Contract.

3.5 The unit rates and prices shall be in **Kenya Shillings**.

3.6 Tenders shall remain valid for a period of **One Twenty (120**) days from the date of submission. However in exceptional circumstances, the Employer may request that the Tenderers extend the period of validity for a specified additional period. The request and the Tenderers' responses shall be made in writing.

3.7 The Tenderer shall prepare **one (1) original** document comprising the tender documents as described in these Instructions to Tenderers.

3.8 The original shall be typed or written in indelible ink and shall be signed by a person or persons duly authorized to sign on behalf of the Tenderer. All pages of the tender where alterations or additions have been made shall be initialed by the person or persons signing the tender.

3.9 Clarification of tenders shall be requested by the tenderer to be received by the procuring entity not later than **7 days** prior to the deadline for submission of tenders.

3.10 The procuring entity shall reply to any clarifications sought by the tenderer within **7 days** of receiving the request to enable the tenderer to make timely submission of its tender.

4. Submission of Tenders

4.1 The tender duly filled and sealed in an envelope shall;-

(a) be addressed to the Employer at the address provided in the invitation to tender;

[b] bear the name and identification number of the Contract as defined in the invitation to tender; and

[c] Provide a warning not to open before the specified time and date for tender opening.

4.2 Tenders shall be delivered to the Employer at the address specified above not later than the time and date specified in the invitation to tender.

4.3 The tenderer shall not submit any alternative offers unless they are specifically required in the tender documents.

Only one tender may be submitted by each tenderer for each tender. Any tenderer who fails to comply with this requirement will be disqualified.

4.4 Any tender received after the deadline for opening tenders will be returned to the tenderer un-opened.

4.5 The Employer may extend the deadline for submission of tenders by issuing an amendment in accordance with sub-clause 2.5 in which case all rights and obligations of the Employer and the Tenderers previously subject to the original deadline will then be subject to the new deadline.

5. Tender Opening and Evaluation

5.1 The tenders will be opened in the presence of the Tenderers' representatives who choose to attend at the time and in the place specified in the invitation to tender.

5.2 The Tenderers' names, the total amount of each tender and such other details as may be considered appropriate, will be announced at the tender opening by the Employer. Minutes of the tender opening, including the information disclosed to those present will also be prepared by the Employer.

5.3 Information relating to the examination, clarification, evaluation and comparison of tenders and recommendations for the award of the Contract shall not be disclosed to Tenderers or any other persons not officially concerned with such process until the award to the successful Tenderer has been announced. Any effort by a Tenderer to

influence the Employer's officials, processing of tenders or award decisions shall result in the rejection of his tender.

5.4 Tenders determined to be substantially responsive will be checked for any arithmetic errors. Errors will be corrected as follows:

(a) where there is a discrepancy between the amount in figures and the amount in words, the amount in words will prevail; and

(b) where there is a discrepancy between the unit rate and the line item total resulting from multiplying the unit rate by the quantity, the unit rate as quoted will prevail, unless in the opinion of the Employer's representative, there is an obvious typographical error, in which case the adjustment will be made to the entry containing that error.

(c) In the event of a discrepancy between the tender amount as stated in the Form of Tender and the corrected tender figure in the main summary of the Bill of Quantities/Quotation, the amount as stated in the Form of Tender shall prevail.

(d) The Error Correction Factor shall be computed by expressing the difference between the tender amount and the corrected tender sum as a percentage of the Corrected Builder's Work (i.e. corrected tender sum less P.C. and Provisional Sums).

(e) The Error Correction Factor shall be applied to all Builder's Work (as a rebate or addition as the case may be) for the purposes of valuations for Interim Certificates and valuation of variations.

(f) The amount stated in the tender will be adjusted in accordance with the above procedure for the correction of errors and with concurrence of the Tenderer, shall be considered as binding upon the Tenderer. If the Tenderer does not accept the corrected amount, the tender may be rejected and the Tender Security forfeited.

5.5 The tender evaluation committee shall evaluate the tender within 30 days of the validity period from the date of opening the tender.

5.6 Contract price variations shall not be allowed for contracts not exceeding one year (12 months)

5.7 Where contract price variation is allowed, the valuation shall not exceed 25% of the original contract price.

5.8 Price variation requests shall be processed by the procuring entity within 30 days of receiving the request.

5.9 To assist in the examination, evaluation, and comparison of tenders, the Employer at his discretion, may request [in writing] any Tenderer for clarification of the tender, including breakdowns of unit rates. The request for clarification and the response shall be in writing or by cable, telex or facsimile but no change in the tender price or substance of the tender shall be sought, offered or permitted.

5.10 The Tenderer shall not influence the Employer on any matter relating to his tender from the time of the tender opening to the time the Contract is awarded. Any effort by the Tenderer to influence the Employer or his employees in his decision on tender evaluation, tender comparison or Contract award shall result in the rejection of the tender.

6. Award of Contract

6.1 The award of the Contract will be made to the Tenderer who has offered the lowest evaluated tender price.

6.2 Notwithstanding the provisions of clause 6.1 above, the Employer reserves the right to accept or reject any tender and to cancel the tendering process and reject all tenders at any time prior to the award of Contract without thereby incurring any liability to the affected Tenderer or Tenderers or any obligation to inform the affected Tenderer or Tenderers of the grounds for the action.

6.3 The Tenderer whose tender has been accepted will be notified of the award prior to expiration of the tender validity period in writing or by cable, telex or facsimile. This notification (hereinafter and in all Contract documents called the “Letter of Acceptance”) will state the sum [hereinafter and in all Contract documents called the “Contract Price” which the Employer will pay the Contractor in consideration of the execution, completion, and maintenance of the Works by the Contractor as prescribed by the Contract. The contract shall be formed on the parties signing the contract. At the same time the other tenderers shall be informed that their tenders have not been successful and shall be given reasons for non-responsiveness.

6.4 The Contract Agreement will incorporate all agreements between the Employer and the successful Tenderer. It will be signed by the Employer and sent to the successful Tenderer, within 30 days following the notification of award. Within 21 days of receipt, the successful Tenderer will sign the Agreement and return it to the Employer.

6.5 Within 21 days after receipt of the Letter of Acceptance, the successful Tenderer shall deliver to the Employer a Performance Security amount stipulated in the Appendix to Conditions of Contract.

6.6 The parties to the contract shall have it signed within 30 days from the date of notification of contract award unless there is an administrative review request.

6.7 The procuring entity may at any time terminate procurement proceedings before contract award and shall not be liable to any person for the termination.

6.8 The procuring entity shall give prompt notice of the termination to the tenderers and on request give its reasons for termination within 14 days of receiving the request from any tenderer.

7. Corrupt and fraudulent practices

7.1 The procuring entity requires that the tenderer observes the highest standard of ethics during the procurement process and execution of the contract. A tenderer shall sign a declaration that **he has not and will not** be involved in corrupt and fraudulent practices.

7.2 The procuring entity will reject a tender if it determines that the tenderer recommended for award has engaged in corrupt and fraudulent practices in competing for the contract in question.

7.3 Further a tenderer who is found to have indulged in corrupt and fraudulent practices risks being debarred from participating in public procurement in Kenya.

SECTION III: QUALIFICATION CRITERIA

Qualification Criteria			Compliance Requirements	Documentation
No.	**Subject**	**Requirement**	**Single Entity**	**Submission Requirements**
1. Eligibility				
1.1	**Eligibility**	Nationality in accordance with confidential business Questionnaire in the standard forms	Must meet requirement	Refer to standard form section 7
1.4	**Incorporation & Registration**	Pursuant to sub clause 1.2 the following shall be provided; - Certified Copy of Certificate of incorporation to show that the applicant is a registered company and legally authorised to do business in Kenya -Proof of registration with the National Construction Authority **Civil Engineering** Road works & Bridges Category **NCA 7 and above** for Road Works. - Proof of prequalification F/Y 2017/2019 with KeRRA Category (As specified in the Invitation to Tender) - VAT Registration -PIN Registration -Valid Tax Compliance Certificate -Proof of financial soundness -Pre-tender site certificate	Must meet requirement	Refer to standard form section 7

Qualification Criteria			Compliance Requirements	Documentation
No.	**Subject**	**Requirement**	**Single Entity**	**Submission Requirements**
2.1	**History of Non-Performing Contracts**	Non-performance of a contract did not occur within the last **three (3)** years prior to the deadline for application submission based on all information on fully settled disputes or litigation. A fully settled dispute or litigation is one that has been resolved in accordance with the Dispute Resolution Mechanism under the respective contract, and where all appeal instances available to the applicant have been exhausted.	Must meet requirement by itself or as party to past	Litigation History
2.2	**Pending Litigation**	All pending litigation shall in total not represent more than fifty per cent (50%)] of the Applicant's net worth and shall be treated as resolved against the Applicant.	Must meet requirement by itself or as party to past	Refer to standard form section 7
3.1	**Financial Performance**	Submission of audited accounts/balance sheets and bank statements for the last three [3] years for Kshs. **3M** and above works to demonstrate: (a) the current soundness of the applicants financial position and its prospective long term profitability, and (b) capacity to have a cash flow amount of min **Kshs 1,000,000.00** [One Million] equivalent working capital Not applicable for works below Kshs. **3 [Three] Million.**	Must meet requirement (a) Must meet requirement (b) Must meet requirement	Refer to standard form section 7

Qualification Criteria			Compliance Requirements	Documentation
No.	**Subject**	**Requirement**	**Single Entity**	**Submission Requirements**
3.2	**Average Annual Construction Turnover**	Minimum average annual construction turnover of Kshs 1 Million [One Million], calculated as total certified payments received for contracts in progress or completed, within the last three [3], years for works over **Kshs. 3M [Three Million**] Letter from the bank for Proof of having a Bank Account for works below **Kshs. 3M [Three**] **Million**	Must meet requirement	Refer to standard form section 7
4.1	**General Construction Experience**	Experience under construction contracts in the role of contractor, subcontractor, or management contractor for at least the last Five (5) years for works above Kshs. **3M [Three Million**] prior to the applications submission deadline	Must meet requirement	Refer to standard form section 7
4.2(a)	**Specific Construction Experience**	Participation as contractor, management contractor or subcontractor, in at least two (2) contracts within the last five (5) years, each with a value of at least Kshs. **1 Million (One Million)** for works over **Kshs**. **3M [Three Million**] **& KShs. 500,000.00 [Five hundred thousand**] for works within **Kshs**. 1 **– 3 Million,** that have been successfully and substantially completed and that are similar to the proposed works. The similarity shall be based on the physical size, complexity, methods/technology or other characteristics as described in Scope of Works	Must meet requirement	Refer to standard form section 7

Qualification Criteria			Compliance Requirements	Documentation
No.	**Subject**	**Requirement**	**Single Entity**	**Submission Requirements**
4.2(b)		b) For the above or other contracts executed during the period stipulated in 4.2(a) above, a minimum construction experience of: - Spot improvement & rehabilitation works.	Must meet requirements	Refer to standard form section 7
4.3	**Work Methodology**	Submission of a brief work methodology	Should demonstrate understanding of the scope of works and other general requirements	Refer to standard form section 7
5. Equipment Holding				
5.1	**Minimum number of Equipment**	The bidder must indicate the minimum core plant and equipment considered by the company to be necessary for undertaking the project together with proof of ownership	Must meet the requirement	Refer to standard form section 7
6. Current Commitment				
6.1	**On-going contracts**	The total value of current works on the on-going contracts must not exceed Kshs. Three (3) Million for works below Three (3) Million; The total value of current works on the on-going contracts must not exceed Kshs. Ten (10) Million for works above 3 Million	Must meet requirements	

Qualification Criteria			Compliance Requirements	Documentation
No.	**Subject**	**Requirement**	**Single Entity**	**Submission Requirements**
7. Site Staff				
		The site staff shall possess minimum levels set below;		
1	**Site Agent**	Qualification = Diploma In Civil Engineering General Experience = 3 yrs Specific Experience = 1 - 2 Yrs	Must meet requirements	Refer to guideline notes
2	**Dep. Site Agent/ Site Engineer**	Qualification = Diploma In Civil Engineering General Experience = 3 yrs Specific Experience = 1 - 2 Yrs		
3	**Senior Foreman**	Qualification = Diploma In Civil Engineering General Experience = 3 yrs Specific Experience = 1 - 2 Yrs		
4	**Site Surveyor**	Qualification = Diploma In Survey General Experience = 3 yrs Specific Experience = 1 - 2 Yrs		
5	**Foremen (5 N0.)**	Qualification = KCSE General Experience = 2 yrs Specific Experience =2 Yrs		

SECTION IV: CONDITIONS OF CONTRACT

Table of Clauses **Page**

1. DEFINITIONS…… 21

2. CONTRACT DOCUMENTS…… 22

3. EMPLOYER'S REPRESENTATIVE'S DECISIONS…… 23

4. WORKS, LANGUAGE AND LAW OF CONTRACT…… 23

5. SAFETY, TEMPORARY WORKS AND DISCOVERIES……. 23

6. WORK PROGRAM AND SUB-CONTRACTING…….. 23

7. THE SITE……. 23

8. INSTRUCTIONS…… 24

9. EXTENSION OF COMPLETION DATE…….. 24

10. MANAGEMENT MEETINGS……. 25

11. DEFECTS…… 25

12. BILLS OF QUANTITIES……. 26

13. VARIATIONS…….. 26

14. PAYMENT CERTIFICATES AND FINAL ACCOUNT …… 27

15. INSURANCES ……. 28

16. LIQUIDATED DAMAGES…… 28

17. COMPLETION AND TAKING OVER…… 28

18. TERMINATION…… 28

19. PAYMENT UPON TERMINATION…… 29

20. CORRUPT GIFTS AND PAYMENTS OF COMMISSION…… 29

21. SETTLEMENT OF DISPUTES…… 30

CONDITIONS OF CONTRACT

1. Definitions

1.1 In this Contract, except where context otherwise requires, the following terms shall be interpreted as indicated;

"**Bills of Quantities**" means the priced and completed Bill of Quantities forming part of the tender [where applicable].

"**Schedule of Rates**" means the priced Schedule of Rates forming part of the tender [where applicable].

"**The Completion Date**" means the date of completion of the Works as certified by the Employer's Representative.

"**The Contract**" means the agreement entered into by the Employer and the Contractor as recorded in the Agreement Form and signed by the parties.

"**The Contractor**" refers to the person or corporate body whose tender to carry out the Works has been accepted by the Employer.

"**The Contractor's Tender**" is the completed tendering document submitted by the Contractor to the Employer.

"**The Contract Price**" is the price stated in the Letter of Acceptance.

"**Days**" are calendar days; "Months" are calendar months.

"**A Defect**" is any part of the Works not completed in accordance with the Contract.

"**The Defects Liability Certificate**" is the certificate issued by Employer's Representative upon correction of defects by the Contractor.

"**The Defects Liability Period**" is the period named in the Appendix to Conditions of Contract and calculated from the Completion Date.

"**Drawings**" include calculations and other information provided or approved by the Employer's Representative for the execution of the Contract.

"**Employer**" Includes Central or Local Government administration, Universities, Public Institutions and Corporations and is the party who employs the Contractor to carry out the Works.

"**Equipment**" is the Contractor's machinery and vehicles brought temporarily to the Site for the execution of the Works.

"**Site**" means the place or places where the permanent Works are to be carried out including workshops where the same is being prepared.

"**Materials**" are all supplies, including consumables, used by the Contractor for incorporation in the Works.

"**Employer's Representative**" is the person appointed by the Employer and notified to the Contractor for the purpose of supervision of the Works.

"**Specification**" means the Specification of the Works included in the Contract.

"**Start Date**" is the date when the Contractor shall commence execution of the Works.

"**A Subcontractor**" is a person or corporate body who has a Contract with the Contractor to carry out a part of the Work in the Contract, which includes Work on the Site.

"**Temporary works**" are works designed, constructed, installed, and removed by the Contractor which are needed for construction or installation of the Works.

"**A Variation**" is an instruction given by the Employer's Representative which varies the Works.

"**The Works**" are what the Contract requires the Contractor to construct, install, and turnover to the Employer.

2. Contract Documents

2.1 The following documents shall constitute the Contract documents and shall be interpreted in the following order of priority;

(1) Agreement,
(2) Letter of Acceptance,
(3) Contractor's Tender,
(4) Conditions of Contract,
(5) Specifications,
(6) Drawings,
(7) Bills of Quantities

3. Employer's Representative's Decisions

3.1 Except where otherwise specifically stated, the Employer's Representative will decide contractual matters between the Employer and the Contractor in the role representing the Employer.

4. Works, Language and Law of Contract

4.1 The Contractor shall construct and install the Works in accordance with the Contract documents. The Works may commence on the Start Date and shall be carried out in accordance with the Program submitted by the Contractor, as updated with the approval of the Employer's Representative, and complete them by the Intended Completion Date.

4.2 The ruling language of the Contract shall be English language and the law governing the Contract shall be the law of the Republic of Kenya.

5. Safety, Temporary works and Discoveries

5.1 The Contractor shall be responsible for design of temporary works and shall obtain approval of third parties to the design of the temporary works where required.

5.2 The Contractor shall be responsible for the safety of all activities on the Site.

5.3 Anything of historical or other interest or significant value unexpectedly discovered on the Site shall be the property of the Employer. The Contractor shall notify the Employer's Representative of such discoveries and carry out the Employer's Representative's instructions for dealing with them.

6 Work Program and Sub-contracting

6.1 Within seven days after Site possession date, the Contractor shall submit to the Employer's Representative for approval a program showing the general methods, arrangements, order and timing for all the activities in the Works.

6.2 The Contractor may sub-contract the Works (but only to a maximum of 25 percent of the Contract Price) with the approval of the Employer's Representative. However, he shall not assign the Contract without the approval of the Employer in writing. Sub-contracting shall not alter the Contractor's obligations.

7 The site

7.1 The Employer shall give possession of all parts of the Site to the Contractor.

7.2 The Contractor shall allow the Employer's Representative and any other person authorized by the Employer's Representative, access to the Site and to any place where work in connection with the Contract is being carried out or is intended to be carried out.

8 Instructions

8.1 The Contractor shall carry out all instructions of the Employer's Representative which are in accordance with the Contract.

9 Extension of Completion Date

9.1 The Employer's Representative shall extend the Completion Date if an occurrence arises which makes it impossible for completion to be achieved by the Intended Completion Date. The Employer's Representative shall decide whether and by how much to extend the Completion Date.

9.2 For the purposes of this clause, the following occurrences shall be valid for consideration;

Delay by:-

(a) force majeure, or

(b) reason of any exceptionally adverse weather conditions, or

(c) reason of civil commotion, strike or lockout affecting any of the trades employed upon the Works or any of the trades engaged in the preparation, manufacture or transportation of any of the goods or materials required for the Works, or

(d) reason of the Employer's Representative's instructions issued under these Conditions, or

(e) reason of the contractor not having received in due time necessary instructions, drawings, details or levels from the Employer's Representative for which he specifically applied in writing on a date which having regard to the date for Completion stated in the appendix to these Conditions or to any extension of time then fixed under this clause was neither unreasonably distant from nor unreasonably close to the date on which it was necessary for him to receive the same, or

(f) delay on the part of artists, tradesmen or others engaged by the Employer in executing work not forming part of this Contract, or

(g) Reason of delay by statutory or other services providers or similar bodies engaged directly by the Employer, or

(h) reason of opening up for inspection of any Work covered up or of the testing or any of the Work, materials or goods in accordance with these conditions unless the inspection or test showed that the Work, materials or goods were not in accordance with this Contract, or

(i) reason of delay in appointing a replacement Employer's Representative, or

(j) reason of delay caused by the late supply of goods or materials or in executing Work for which the Employer or his agents are contractually obliged to supply or to execute as the case may be, or

(k) Delay in receiving possession of or access to the Site.

10 Management Meetings

10.1 A Contract management meeting shall be held regularly and attended by the Employer's Representative and the Contractor. Its business shall be to review the plans for the remaining Work. The Employer's Representative shall record the business of management meetings and provide copies of the record to those attending the meeting and the Employer. The responsibility of the parties for actions to be taken shall be decided by the Employer's Representative either at the management meeting or after the management meeting and stated in writing to all who attend the meeting.

10.2 Communication between parties shall be effective only when in writing.

11 Defects

11.1 The Employer's Representative shall inspect the Contractor's work and notify the Contractor of any defects that are found. Such inspection shall not affect the Contractor's responsibilities. The Employer's Representative may instruct the Contractor to search for a defect and to uncover and test any Work that the Employer's Representative considers may have a defect. Should the defect be found, the cost of uncovering and making good shall be borne by the Contractor. However if there is no defect found, the cost of uncovering and making good shall be treated as a variation and added to the Contract Price.

11.2 The Employer's Representative shall give notice to the Contractor of any defects before the end of the Defects Liability Period, which begins

at Completion, and is defined in the Appendix to Form of Agreement.

11.3 Every time notice of a defect is given, the Contractor shall correct the notified defect within the length of time specified by the Employer's Representative's notice. If the Contractor has not corrected a defect within the time specified in the Employer's Representative's notice, the Employer's Representative will assess the cost of having the defect corrected by other parties and such cost shall be treated as a variation and be deducted from the Contract Price.

12 Bills of Quantities

12.1 The Bills of Quantities shall contain items for the construction, installation, testing and commissioning of the Work to be done by the Contractor. The Contractor will be paid for the quantity of the Work done at the rates in the Bills of Quantities for each item. Items against which no rate is entered by the Tenderer will not be paid for when executed and shall be deemed covered by the rates for other items in the Bills of Quantities.

12.2 Where Bills of Quantities do not form part of the Contract, the Contract Price shall be a lump sum (which shall be deemed to have been based on the rates in the Schedule of Rates forming part of the tender) and shall be subject to re-measurement after each stage.

13 Variations

13.1 The Contractor shall provide the Employer's Representative with a quotation for carrying out the variations when requested to do so. The Employer's Representative shall assess the quotation and shall obtain the necessary authority from the Employer before the variation is ordered.

13.2 If the Work in the variation corresponds with an item description in the Bill of Quantities, the rate in the Bill of Quantities shall be used to calculate the value of the variation. If the nature of the Work in the variation does not correspond with items in the Bill of Quantities, the quotation by the Contractor shall be in the form of new rates for the relevant items of Work.

13.3 If the Contractor's quotation is unreasonable, the Employer's Representative may order the variation and make a change to the Contract Price, which shall be based on the Employer's Representative's own forecast of the effects of the variation on the Contractor's costs.

14 Payment Certificates and Final Account

14.1 The Contractor shall be paid after each of the following stages of Work listed here below (subject to re-measurement by the Employer's Representative of the Work done in each stage before payment is made). In case of lump-sum Contracts, the valuation for each stage shall be based on the quantities so obtained in the re-measurement and the rates in the Bill of Quantities. As per the site instructions issued

14.2 Upon deciding that Works included in a particular stage are complete, the Contractor shall submit to the Employer's Representative his application for payment. The Employer's Representative shall check, adjust if necessary and certify the amount to be paid to the Contractor within 21 days of receipt of the Contractor's application .The Employer shall pay the Contractor the amounts so certified within 30 days of the date of issue of each Interim Certificate.

14.3 The Contractor shall supply the Employer's Representative with a detailed final account of the total amount that the Contractor considers payable under the Contract before the end of the Defects Liability Period. The Employer's Representative shall issue a Defect Liability Certificate and certify any final payment that is due to the Contractor within 30 days of receiving the Contractor's account if it is correct and complete. If it is not, the Employer's Representative shall issue within 21 days a schedule that states the scope of the corrections or additions that are necessary. If the final account is still unsatisfactory after it has been resubmitted, the Employer's Representative shall decide on the amount payable to the Contractor and issue a Final Payment Certificate. The Employer shall pay the Contractor the amount so certified within 60 days of the issue of the Final Payment Certificate.

14.4 If the period laid down for payment to the Contractor upon each of the Employer's Representative's Certificate by the Employer has been exceeded, the Contractor shall be entitled to claim simple interest calculated pro-rata on the basis of the number of days delayed at the

Central Bank of Kenya's average base lending rate prevailing on the first day the payment becomes overdue. The Contractor will be required to notify the Employer within 15 days of receipt of delayed payments of his intentions to claim interest.

15. Insurance

15.1 The Contractor shall be responsible for and shall take out appropriate cover against, among other risks, personal injury for his employees; loss of or damage to the Works, materials and plant; and loss of or damage to property.

16. Liquidated Damages

16.1 The Contractor shall pay liquidated damages to the Employer at the rate 0.001 per cent of the Contract price per day for each day that the actual Completion Date is later than the Intended Completion Date except in the case of any of the occurrences listed under clause 9.2. The Employer may deduct liquidated damages from payments due to the Contractor. Payment of liquidated damages shall not affect the Contractor's liabilities.

17. Completion and Taking Over

17.1 Upon deciding that the Work is complete the Contractor shall request the Employer's Representative to issue a Certificate of Completion of the Works, upon deciding that the Work is completed.

The Employer shall take over the Site and the Works within seven days of the Employer's Representative issuing a Certificate of Completion.

18. Termination

18.1 The Employer or the Contractor may terminate the Contract if the other party causes a fundamental breach of the Contract. These fundamental breaches of Contract shall include, but shall not be limited to, the following;

(a) the Contractor stops Work for 30 days continuously without reasonable cause or authority from the Employer's Representative;

(b) the Contractor is declared bankrupt or goes into liquidation other than for a reconstruction or amalgamation;

(c) a payment certified by the Employer's Representative is not paid by the Employer to the Contractor within 30 days after the expiry of the payment periods stated in sub clauses 14.2 and 14.3 hereinabove.

(d) the Employer's Representative gives notice that failure to correct a particular defect is a fundamental breach of Contract and the Contractor fails to correct it within a reasonable period of time.

18.2 If the Contract is terminated, the Contractor shall stop Work immediately, and leave the Site as soon as reasonably possible. The Employer's Representative shall immediately thereafter arrange for a meeting for the purpose of taking record of the Works executed and materials, goods, equipment and temporary buildings on Site.

19. Payment Upon Termination

19.1 The Employer may employ and pay other persons to carry out and complete the Works and to rectify any defects and may enter upon the Works and use all materials on Site, plant, equipment and temporary works.

19.2 The Contractor shall, during the execution or after the completion of the Works under this clause, remove from the Site as and when required within such reasonable time as the Employer's Representative may in writing specify, any temporary buildings, plant, machinery, appliances, goods or materials belonging to him, and in default thereof , the Employer may (without being responsible for any loss or damage) remove and sell any such property of the Contractor, holding the proceeds less all costs incurred to the credit of the Contractor.

19.3 Until after completion of the Works under this clause, the Employer shall not be bound by any other provision of this Contract to make any payment to the Contractor, but upon such completion as aforesaid and the verification within a reasonable time of the accounts therefor the Employer's Representative shall certify the amount of expenses properly incurred by the Employer and, if such amount added to the money paid to the Contractor before such determination exceeds the total amount which would have been payable on due completion in accordance with this Contract, the difference shall be a debt payable to the Employer by the Contractor; and if the said amount added to the said money be less than the said total amount, the difference shall be a debt payable by the Employer to the Contractor.

20. Corrupt Gifts and Payments of Commission

20.1 The Contractor **shall not**;

(a) Offer or give or agree to give to any person in the service of the Employer any gifts or consideration of any kind as an inducement or reward for doing or forbearing to do or for having done or forborne to do any act in relation to the obtaining or execution of this or any other contract with the Employer or for

showing or forbearing to show favour or disfavour to any person in relation to this or any other contract with the Employer.

(b) Any breach of this Condition by the Contractor or by anyone employed by him or acting on his behalf (whether with or without the knowledge of the Contractor) shall be an offence under the Laws of Kenya.

21. Settlement of Disputes

21.1 Any dispute arising out of the Contract which cannot be amicably settled between the parties shall be referred by either party to the arbitration and final decision of a person to be agreed between the parties. Failing agreement to concur in the appointment of an Arbitrator, the Arbitrator shall be appointed by the chairman of the Chartered Institute of Arbitrators, Kenya branch, on the request of the applying party.

SECTION V: APPENDIX TO FORM OF AGREEMENT

This Appendix to Form of Agreement forms part of the Agreement.

Item	**Data**
Time for Completion	24 Weeks
Priority of Documents	The documents forming the Contract shall be interpreted in the following order of priority: • the Contract Agreement and Appendix to form of agreement • the Letter of Acceptance • the Form of Tender • the Conditions of Contract, Part II - Conditions of Particular Application • the Conditions of Contract, Part I - General Conditions of Contract • the Specifications • the Drawings, • the Priced Bill of Quantities
Law of Contract	Laws of the Republic of Kenya
Language	English
Provision of Site	On Commencement Date
Name and Address of Employer	Director General Kenya Rural Roads Authority P.O. Box 48151-00100 **Nairobi**
Authorised Person	General Manager (Maintenance), Kenya Rural Roads Authority P.O. Box 48151-00100 **Bungoma Region**
Name and Address of the Engineer	Regional Manager, Kenya Rural Roads Authority P. O. Box 1473 50200, **Bungoma**
Name and Address of Engineer's Representative	Constituency Roads Officer For the Respective Constituency **Bungoma Region**
Penalty to the Contractor for Employer paying workers on his behalf	10% of the amount paid to the workers.

Item	Data
Performance Security Amount Form	Not applicable 5% of sum stated as the Contract Price Bank Guarantee or Insurance Bond issued by PPOA approved insurance companies
Requirements of Contractors Design	Not applicable
Programme ⇨ Time of Submission	Within 14 days of Commencement Date
⇨ Form of Programme ⇨ Interval Updates	Bar Chart As requested by the RM
Liquidated Damages Amount payable due to failure to complete	0.01% of Contract Price per Day to a limit of 1% of Contract Price.
Defects Liability	Refer to guideline Notes
Period of notifying defects	90 days calculated from the date stated in the notice under sub clause 11.2
Percentage of Retention	Refer to guideline Notes
Maximum Amount of Advance Payment	Not applicable
Form of Guarantee for Advance Payment	Not applicable
Valuation of Works	Remeasurements with Bills of Quantities
Repayment Schedule for Advance Payment	Not Applicable
Minimum Amount of Interim Payment	Kshs. 500,000.00 (Five Hundred Thousand Only) for works **below** 1 (One) Million and Kshs. 800,000.00 (Eight Hundred Thousand Only) for works **above** 1 (One) Million
Currency of Payment	Kenya Shilling
Rate of Interest	Simple Interest at a rate of 2% above mean Base Lending Rate as issued by the Central Bank of Kenya.
Insurance	Required/ Not required
Insurance ⇨ The Works, materials plants & fees- Contractor's All risks	Amount of Cover The Contract Price stated in the Agreement +15%+replacement cost of equipment on site.

Item	Data
⇨ Third party injury to persons and damage to property	Kshs. 5% of sum stated as the Contract Price
⇨ Workers compensation (WIBA- workers injury benefits policy)	As per work injury benefits act 2007 laws of Kenya
Arbitration	
⇨ Rules	CAP 49 of the Laws of Kenya
⇨ Appointing Authority	Chairman Chartered Institute of Arbitrators, Kenya Branch.
⇨ Place of Arbitration	Kenya Rural Roads Authority, Headquarters

Must be signed and stamped

Sign _____designation _____date_____

Stamp _____

SECTION VI: STANDARD FORMS

Table of Contents

CONTENTS: **PAGE**

FORM OF INVITATION FOR TENDERS **35**

FORM OF TENDER **36**

FORM OF CONTRACT AGREEMENT..... **37**

LETTER OF AWARD **41**

FORM OF TENDER SECURITY **42**

PERFORMANCE BANK GUARANTEE **43**

BANK GUARANTEE FOR ADVANCE PAYMENT **44**

QUALIFICATION INFORMATION **45**

CONFIDENTIAL BUSINESS QUESTIONNAIRE **46**

SCHEDULE OF LABOUR: - BASIC RATES **48**

CERTIFICATE OF TENDERER'S VISIT TO SITE **49**

FORM OF WRITTEN POWER-OF-ATTORNEY **50**

KEY PERSONNEL **51**

SCHEDULE OF THE PROPOSED APPROPRIATE EQUIPMENT. **52**

SCHEDULE OF COMPLETED CIVIL WORKS CARRIED OUT IN THE PREVIOUS YEARS

SCHEDULE OF ONGOING PROJECTS **54**

OTHER SUPPLEMENTARY INFORMATION **55**

ADJUDICATOR'S AGREEMENT **56**

FRAUD & CORRUPTION **58**

ENVIRONMENTAL AND SOCIAL COMMITMENT **59**

PUBLIC PROCUREMENT ADMINISTRATIVE REVIEW BOARD **60**

DECLARATION FORM **61**

FORM OF INVITATION FOR TENDERS

_____[Date]

To: _____ [Name of Contractor]

_____[Address]

_____

_____

Dear Sirs:

Reference:_____[Contract Name]

You are qualified to tender for the above Contract.

We hereby invite you and other qualified Tenderers to submit a Tender for the execution and completion of the Works.

A complete set of Tender documents may be downloaded from the Kenya Rural Roads Authority **(KeRRA) website**: www.kerra.go.ke from **Monday 8th July, 2019.**

A soft copy of a complete set of tender documents may be obtained by interested candidates from the KeRRA Regional Procurement Office.

All Tenders shall be delivered to:
KeRRA Regional Office P.O Box 1473 - 50200 in Kanduyi, along Webuye - Malaba Road, adjacent to the District Officer's Office in Kanduyi Bungoma Town and registered in the tender register available in the procurement office.

on or before **11.00am Friday 19th July 2019**. Tenders will be opened immediately thereafter, in the presence of those Tenderers' representatives who choose to attend.

Please confirm receipt of this letter and your intention to Tender in writing.

Yours faithfully,

_____ Authorized Signature

_____ Name and Title

FORM OF TENDER

TO: _____[Name of Employer) _____[Date]

_____[Name of Contract]

Dear Sir,

1. In accordance with the Conditions of Contract, Specifications, Drawings and Bills of Quantities for the execution of the above Works, We, the undersigned offer to construct, install and complete such Works and remedy any defects therein for the sum of Kshs._____[Amount in figures]Kenya Shillings_____
_____[Amount in words]

2. We undertake, if our Tender is accepted, to commence the Works on the commencement date and to complete the whole of the Works comprised in the Contract within the time stated in the Appendix.

3. We agree to abide by this Tender until _____[Insert date], and it shall remain binding upon us and may be accepted at any time before that date.
4. Unless and until a formal Agreement is prepared and executed this Tender together with your written acceptance thereof, shall constitute a binding Contract between us.

4. We understand that you are not bound to accept the lowest or any Tender you may receive.

Dated this _____ day of _____20_____

Signature _____in the capacity of_____

duly authorized to sign Tenders for and on behalf of
_____[Name of Tenderer] of

_____[Address of Tenderer]

Witness: Name_____

Address_____

Signature_____

Date_____

FORM OF CONTRACT AGREEMENT

AGREEMENT

BETWEEN

KENYA RURAL ROADS AUTHORITY

AND

CONTRACT No.

This Contract is made this…….day of…….20……between Kenya Rural Roads Authority, represented by the Director General of P.O. Box 48151 – 00100, Nairobi Telephone 020 – 801346 (Hereinafter called the Employer) acting through his representative THE REGIONAL MANAGER-BUNGOMA, Of P. O. Box 1473, Bungoma of the one part and also of ----------
---
---------- (Hereinafter referred to as "the Contractor") of the other part.
Whereas the Employer is desirous of maintaining the road network as described,

Name of the road: **C807 (A104 NAMBUCHI - NAKHWANA - MUYENGA - C807 MYANGA)**

Tender No. **KeRRA/011/BGM/39/BML-22%RMLF SAVINGS/2-52-18|19-537**

Region: **BUNGOMA**

Constituency: **BUMULA**

and has accepted the Offer of the Contractor to execute road maintenance Works as defined hereinafter, AND
Whereas the Contractor represented to the Employer that he has the required capacity and ability, and has agreed to execute the Works on the Terms and Conditions set forth in this Contract for the Tender Sum of **Kshs**

……..……(……

…….....)

NOW THEREFORE the Parties hereto agree as follows:

Article 1: GENERAL PROVISIONS

The documents forming the Contract are to be taken as mutually explanatory. If ambiguity or discrepancy is found in the documents the Employer shall issue necessary instructions to the Contractor.

1.2 The language of the Contract shall be English. The law of the Contract is the Republic of Kenya.

Article 2: OBLIGATIONS OF THE EMPLOYER

2.1 The Employer shall provide the Site and right of access thereto at the date of Commencement.
2.2 The Employer shall ensure that the Contractor's claims for payment are settled timeously.
2.3 The Employer shall inspect the Contractor's work regularly.

2.4 No approval or consent or absence of comment by the Employer shall affect the Contractor's obligations.

Article 3: EMPLOYER'S REPRESENTATIVE

3.1 The Director General of KeRRA will have overall responsibility for the Contract, and will be represented by the **Regional Manager- Bungoma** for the day-to-day management of the Contract.

3.2 The Regional Manager shall appoint and provide a Road Supervisor by the name of Mr Wekesa CRO Bumula Constituency who shall from time to time assign work to the Contractor. The Engineer shall notify the Contractor in writing of any change in the Road Supervisor.

3.3. The Regional Manager shall provide the Contractor with an initial Work plan against which the Contractor shall carry out the Works. The Regional Manager shall be entitled to vary the Work plan according to circumstances and to issue instructions to the Contractor accordingly.

Article 4: CONTRACTOR'S OBLIGATIONS

4.1 The Contractor shall carry out the Works described in Annex 1and the Work Plan Annex 3 properly and in accordance with the Contract. The Contractor shall provide all supervision, labour and tools which may be required.

4.2 The Contractor shall submit to the Employer for consent the name and particulars of the person authorized to receive instructions on behalf of the Contractor.

4.3 The Contractor shall comply with all instructions given by the Employer in respect of the Works.

4.4 The Contractor shall not subcontract any part of the Works without the consent of the Employer.

4.5 The Contractor shall, in the implementation of this contract, use labour based methods whenever possible.

4.6 The Contractor shall recruit labour for the Works from the local communities and shall take particular note of the Government policy on the recruitment of women and youth. The target for each group shall be 30% of the labour force, which the Contractor shall take all possible measures to attain.

Article 5: DESIGN BY CONTRACTOR

5.1 The Contractor shall not be responsible for any Works design.

Article 6: EMPLOYER'S RISKS

6.1 Any failure by the Employer and any delay or disruption caused by any Variation are the relevant Employer's Risks.

Article 7: TIME FOR COMPLETION

7.1 The Contractor shall commence the Works on the Commencement Date…… and shall proceed expeditiously and without delay and shall complete the Works within the Time for Completion, given as…… (Weeks/Months).

7.2 The Contractor shall be entitled to an extension of the Time for Completion where delay is caused by an action, or failure of action of the Employer and/or any other unforeseen circumstance. All such extension of time must be requested by the contractor timeously and approved by the Employer

Article 8: TAKING OVER

8.1. The Contractor may notify the Employer when the Works are considered to be complete.

8.2 The Employer shall notify the Contractor when he considers that the Contractor has completed the Works and stating the date accordingly. Alternatively the Employer may notify the Contractor that the Works, although not fully complete, are ready for taking over, stating the date accordingly. The Contractor shall promptly complete any outstanding work.

Article 9: REMEDYING DEFECTS

9.1. The Employer may, within one month after the Completion date in 8.2, notify the Contractor of any defects. The Contractor shall remedy at no cost to the Employer any defects due to the Contractor's workmanship not being in accordance with the Contract.

Article 10 VARIATIONS AND CLAIMS

10.1 The Employer may instruct Variations

10.2 The Employer shall value the Variations using appropriate rates within the Contract or by a lump sum price agreed between the Parties, or by new rates which the Engineer considers appropriate.

Article 11: CONTRACT PRICE AND PAYMENT

11.1 At not less than monthly intervals, the Contractor shall measure the Works in accordance with the Bill of Quantities and shall submit a statement to the Road Supervisor. No Payment shall be made for Mobilisation and Establishment of the Site. The Road Supervisor shall certify on the statement to the Engineer that the Works have been completed satisfactorily.

11.2 The Employer shall pay the Contractor, upon the Engineer's approval of the Contractor's statement, within 30 days of the date of the certification of the statement. If the Employer disagrees with any part of the Contractor's statement, he shall specify his reasons for disagreement when making payment. The Employer shall not be bound by any sum previously considered by him to be due to the Contractor.

Article 12: DEFAULT

12.1 The Employer shall give notice to the Contractor where he considers the Contractor to be in default of the Contract. If the Contractor fails to remedy the default within a stated period the Employer may give notice of the termination of the Contract.

12.2. After termination the Contractor shall be entitled to payment of any unpaid balance of the value of the Works executed.

Article 13: RISK AND RESPONSIBILITY

13.1 The Contractor shall take responsibility for the care of the Works from the Commencement Date to the date of Take Over.

Article 14: INSURANCES

14.1 The Contractor, prior to commencing the Works, shall effect Third Party and Workers Compensation Insurances and provide evidence to the Employer that the required policies are in force.

Article 15: RESOLUTION OF DISPUTES

15.1 The Parties shall use their best efforts to settle amicably all disputes arising out of or in connection with the Contract.

15.2 Any dispute not resolved under 15.1 shall be referred to a single Arbitrator nominated by ……. in whose Area the Contract is located in accordance with, and subject to the provision of the Arbitration Act of Kenya or any Statutory Modification thereof.

Article 16 CONDITIONS OF CONTRACT

16.1 It is understood that these Conditions of Contract follow the FIDIC Short Form of Contract which shall be referred to for any necessary clarification

16.2 It is hereby understood that the Annexes to the Contract shall be read together with the Contract and shall form an integral part of it.

In witness whereof of the duly authorised representatives of the Parties hereto have signed this Contract the day and the year first written at Bungoma Kenya.

Sign----------

Name----------

Designation----------
for and on behalf of the
Kenya Rural Roads Authority (KeRRA)

Witness

Sign……

Name……

Designation……

Sign……

Name…….

Designation……
For and on behalf of the Contractor

Witness

Sign……..

Name----------

Designation----------

LETTER OF AWARD

KENYA RURAL ROADS AUTHORITY

KeRRA Regional Office
Tel: 055-30723
E - Mail Address:kerrabungoma@yahoo.com
Date:
Ref: KeRRA/BGM/ PROC.
Kanduyi, Webuye-Malaba Road,
Bungoma Town
P.O. Box 1473-50200,
BUNGOMA, KENYA

_____[Date]

To: _____
[Name of the Contractor]

_____
[Address of the Contractor]

Dear Sir,

This is to notify you that your Tender dated _____

for the execution of

_____

_____

[name of the Contract and identification number as given in the Tender documents] for the Contract

Price of Kshs. _____ [amount in figures][Kenya

Shillings_____(amount in words)

in accordance with the Instructions to Tenderers is hereby accepted.

You are hereby instructed to proceed with the execution of the said Works in accordance with the

Contract documents.

Authorized Signature ……

Name and Title of Signatory ……

Attachment :

FORM OF TENDER SECURITY

WHEREAS ……..(hereinafter called "the Tenderer") has submitted a Tender dated …… for the Rehabilitation/Spot Improvement of
……
…… (Name of Contract)

KNOW ALL PEOPLE by these presents that WE …… having our registered office at ……(hereinafter called "the Bank"), are bound unto ……(hereinafter called "the Employer") in the sum of Kshs.…… for which payment well and truly to be made to the said Employer, the Bank binds itself, its successors and assigns by these presents sealed with the Common Seal of the said Bank this …… Day of ……20……

THE CONDITIONS of this obligation are:

1. If after Tender opening the Tenderer withdraws his Tender during the period of Tender validity specified in the Instructions to Tenderers
   Or

2. If the Tenderer, having been notified of the acceptance of his Tender by the Employer during the Period of Tender validity:

   (a) fails or refuses to execute the Form of Agreement in accordance with the Instructions to Tenderers, if required; or

   (b) fails or refuses to furnish the Performance Security, in accordance with the Instructions to Tenderers;

   We undertake to pay to the Employer up to the above amount upon receipt of his first written demand, without the Employer having to substantiate his demand, provided that in his demand the Employer will note that the amount claimed by him is due to him, owing to the occurrence of one or both of the two conditions, specifying the occurred condition or conditions.

   This guarantee will remain in force up to and including thirty (30) days after the Period of Tender validity, and any demand in respect thereof should reach the Bank not later than the said date.

_____ _____
[Date [Signature of the Bank]

_____ _____
[Witness] [Seal]

PERFORMANCE BANK GUARANTEE

To: _____(Name of Employer) _____(Date)

_____(Address of Employer)

Dear Sir,

WHEREAS _____(hereinafter called "the Contractor") has undertaken, in pursuance of Contract No. _____ dated _____ to execute _____ (hereinafter called "the Works");

AND WHEREAS it has been stipulated by you in the said Contract that the Contractor shall furnish you with a Bank Guarantee by a recognised bank for the sum specified therein as security for compliance with his obligations in accordance with the Contract;

AND WHEREAS we have agreed to give the Contractor such a Bank Guarantee:

NOW THEREFORE we hereby affirm that we are the Guarantor and responsible to you, on behalf of the Contractor, up to a total of Kshs. _____ (amount of Guarantee in figures) Kenya Shillings_____ (amount of Guarantee in words), and we undertake to pay you, upon your first written demand and without cavil or argument, any sum or sums within the limits of Kenya Shillings _____ (amount of Guarantee in words) as aforesaid without your needing to prove or to show grounds or reasons for your demand for the sum specified therein.

We hereby waive the necessity of your demanding the said debt from the Contractor before presenting us with the demand.

We further agree that no change, addition or other modification of the terms of the Contract or of the Works to be performed thereunder or of any of the Contract documents which may be made between you and the Contractor shall in any way release us from any liability under this Guarantee, and we hereby waive notice of any change, addition, or modification.

This Guarantee shall be valid until the date of issue of the Employer's notice under Sub-Clause 8.2 (Taking-Over Notice), of the Conditions of Contract.

SIGNATURE AND SEAL OF THE GUARANTOR _____

Name of Bank _____

Address _____

Date _____

BANK GUARANTEE FOR ADVANCE PAYMENT

To: _____ [Name of Employer] _____(Date)

_____[Address of Employer]

Gentlemen,

Ref: _____[name of Contract]

In accordance with the provisions of the Conditions of Contract of the above-mentioned Contract, **We,**_____[name and Address of Contractor] (hereinafter called "the Contractor") shall furnish you with a Bank guarantee by a recognised Bank for the sum specified therein as a security for compliance with his obligations in accordance with the Contract in an amount of Kshs._____[amount of Guarantee in figurers] Kenya Shillings_____[amount of Guarantee in words].

We, the _____[bank or financial institution], as instructed by the Contractor, agree unconditionally and irrevocably to guarantee as primary obligator and not as Surety merely, the payment to _____[name of Employer] on his first demand without whatsoever right of objection on our part and without his first claim to the Contractor, in the amount not exceeding Kshs_____[amount of Guarantee in figures]Kenya Shillings _____[amount of Guarantee in words].

We further agree that no change or addition to or other modification of the terms of the Contract or of the Works to be performed thereunder or of any of the Contract documents which may be made between _____[name of Employer] and the Contractor, shall in any way release us from any liability under this Guarantee, and we hereby waive notice of any such change, addition or modification.

This Guarantee shall remain valid and in full effect from the date of the Advance Payment under the Contract until _____(name of Employer) receives full payment of the same amount from the Contract.

Yours faithfully,
Signature and Seal _____

Name of the Bank or financial institution _____

Address _____

Date _____

Witness: Name: _____

Address: _____

Signature: _____

Date: _____

QUALIFICATION INFORMATION

TENDER QUESTIONNAIRE

Please fill in block letters.

1. Full name of Tenderer;

   ……

2. Full address of Tenderer to which Tender correspondence is to be sent (unless an agent has been appointed below);

   ……

3. Telephone number (s) of Tenderer;

   ……

4. Facsimile of Tenderer;
   ……

5. Name of Tenderer's representative to be contacted on matters of the Tender during the Tender period;
   ……

6. Details of Tenderer's nominated agent (if any) to receive Tender notices (name, address, telephone, telefax);

   ……

   ……

_____
Signature of Tenderer

Make copy and deliver to:_____(Name of Employer) (The Tenderer

shall leave one copy at the time of purchase of the Tender documents)

CONFIDENTIAL BUSINESS QUESTIONNAIRE

You are requested to give the particulars indicated in Part 1 and either Part 2 (a) or 2 (b) whichever applies to your type of business.

You are advised that it is a serious offence to give false information on this Form.

Part 1 – General

Business Name ……

Location of business premises; Country/Town…….

Plot No…… Street/Road ……

KRA PIN No……

KRA Tax Compliance No…… Expiry date……

NCA Registration No…… Expiry date……..

NCA Practicing license No…… Expiry date…….

AGPO Registration No……category……. Expiry date……

Postal Address…… Tel No……..

Nature of Business……..…….

Current Trade Licensee No…… Expiring date…….……

Maximum value of business which you can handle at any time: Kshs …….

Name of your Bankers……..…

Branch…….…

Part 2 (b) – Partnership

Give details of partners as follows:

Name in full	Nationality	Citizenship Details	Shares
1……			
2……			
3……			

Part 2(c) – Registered Company:

Private or public…….....…

State the nominal and issued capital of the Company-

Nominal Kshs…….....……

Issued Kshs…….....…

Give details of all directors as follows:

Name in full .	Nationality.	Citizenship Details.	Shares.
1……..……			
2……..……			
3……..……			
4……..……			

Part 2(d) – Interest in the Firm:

Is there any person / persons in …… …… (Name of Employer) who

has interest in this firm? Yes/No…… (Delete as necessary)

I certify that the information given above is correct.

…… …… ……..…
(Title) (Signature) (Date)

* Attach proof of citizenship

SCHEDULE OF LABOUR: - BASIC RATES

(Reference: Clause 4 of Conditions of Particular Application)

LABOUR CATEGORY	UNIT (MONTH/SHIFT/HOUR)	RATES

Categories to be generally in accordance with those used by the Kenya Building Construction and Engineering and Allied Trades Workers' Union.

I certify that the above information is correct.

…… …… ……

(Title) *(Signature)* *(Date)*

CERTIFICATE OF TENDERER'S VISIT TO SITE

This is to certify that

[Name/s]……

……

Being the authorized representative/Agent of [Name of Tenderer]
……

……

participated in the organized inspection visit of the site of the works for the **(**participated in the organised inspection visit of the site of the work**…….. (……KM)**

held on …… day of……20…….

Signed……
(Employer's Representative)

……

NOTE: This form is to be completed when the site visit is made

FORM OF WRITTEN POWER-OF-ATTORNEY

The Tenderer consisting of a joint venture shall state here below the name and address of his representative who is authorized to receive on his behalf correspondence in connection with the Tender.

……

(Name of Tenderer's Representative in block letters)

……

(Address of Tenderer's Representative)

……

(Signature of Tenderer's Representative)

KEY PERSONNEL

DESIGNATION	NAME	NATIONALITY	SUMMARY OF QUALIFICATIONS AND EXPERIENCE
Headquarters: 1. Managing Director 2. 3. 4. 5. etc.			
Site Office: 1. Site Supervisor 2. 3. 4. 5. 6			

I certify that the above information is correct.

…… …… ……..

(Title) (Signature) (Date)

SCHEDULE OF THE PROPOSED APPROPRIATE EQUIPMENT.

Mandatory minimum number of equipment required by the Employer for the execution of the project that the bidder must make available for the Contract

Item No.	Equipment Details	Minimum Number Required	No of Equipment Owned by the Bidder	No. of equipment to be hired
1	Pedestrian Roller – Man walk behind	1		
2	Double drum vibrating pedestrian roller(3Tons)	1		
3	Self-propelled single drum vibrating (10Tons)	1		
4	Mobile concrete mixers	1		
5	Excavator/loader	1		
6	Concrete vibrators	1		
7	Tippers payload 7 – 10 tonnes	2		
8	Flat bed lorries	1		
9	Water tankers (10,000 litres capacity)	1		

The Bidder must attach certified copies of log books or lease agreement

I certify that the above information is correct.

…… …… ……..
(Title) (Signature) (Date)

SCHEDULE OF COMPLETED CIVIL WORKS CARRIED OUT IN THE PREVIOUS YEARS

DESCRIPTION OF WORKS AND CLIENT	TOTAL VALUE OF WORKS (KSHS)	CONTRACT PERIOD (YEARS)	YEAR COMPLETED

I certify that the above Civil Works were successfully carried out and completed by ourselves.

…… …… ……

(Title) (Signature) (Date)

SCHEDULE OF ONGOING PROJECTS

DESCRIPTION OF WORK AND CLIENT	CONTRACT PERIOD	DATE OF COMMEN-CEMENT	DATE OF COMPLETION	TOTAL VALUE OF WORKS (KSHS.)	% COMPLETED TODATE

I certify that the above Civil Works are being carried out by ourselves and that the above information is correct.

…… …… ……

(Title) (Signature) (Date)

OTHER SUPPLEMENTARY INFORMATION

1. Financial reports for the last two years for **Kshs for** works within **1 - 3M** (balance sheets, profit and loss statements, auditors' reports etc.) and proof of bank account for works below One (1) Million List them below and attach copies.

   ……
   ……
   ……

2. Evidence of access to financial resources to meet the qualification requirements. Cash in hand, lines of credit etc. List below and attach copies of supporting documents

   ……..
   ……..
   ……..

3. Name, address, telephone, telex, fax numbers of the Tenderer's Bankers who may provide reference if contacted by the Employer.

   ……..
   ……..
   ……

4. Information on current litigation in which the Tenderer is involved.

OTHER PARTY (IES)	CAUSE OF DISPUTE	AMOUNT INVOLVED (KSHS)

I certify that the above information is correct.

…… …… ……
Title Signature Date

ADJUDICATOR'S AGREEMENT

Identification of Project:

……
(the "Project")

Name and address of the Employer:

……..
(the "Employer")

Name and address of the Contractor:

……..
(the "Contractor")

Name and address of the Adjudicator:

……..
(the "Adjudicator")

Whereas the Employer and the Contractor have entered into a Contract ("the Contract") for the execution of the Project and wish to appoint the Adjudicator to act as adjudicator in accordance with the Rules for Adjudication ["the Rules"].

The Employer, Contractor and Adjudicator agree as follows:

1. The Rules and dispute provisions of the Contract shall form part of this Agreement.

2. The Adjudicator shall be paid:

   A retainer fee of ……..…….. per calendar month(where applicable)

   A daily fee of ……..…

   Expenses (including the cost of telephone calls, courier charges, faxes and telexes incurred in connection with his duties; all reasonable and necessary travel expenses, hotel accommodation and subsistence and other direct travel expenses).

   Receipts will be required for all expenses.

3. The Adjudicator agrees to act as Adjudicator in accordance with the Rules and has disclosed to the Parties any previous or existing relationship with the Parties or others concerned with the Project.

4. This Agreement shall be governed by the laws of……

5. The Language of this Agreement shall be ……..

SIGNED BY ……

For and on behalf of the Employer in the presence of

Witness ……...
Name ……...
Address ……...
Date ……...

SIGNED BY ……

For and on behalf of the Contractor in the presence of

Witness ……...
Name ……...
Address ……...
Date ……...

SIGNED BY ……

For and on behalf of the Adjudicator in the presence of

Witness ……...
Name ……...
Address ……...
Date ……...

FRAUD & CORRUPTION

1 If the Employer determines that the Contractor has engaged in corrupt, fraudulent, collusive, coercive or obstructive practices, in competing for or in executing the Contract, then the Employer may, after giving 14 days' notice to the Contractor, terminate the Contractor's employment under the Contract and expel him from the Site.

2 Should any employee of the Contractor be determined to have engaged in corrupt, fraudulent, collusive, coercive, or obstructive practice during the execution of the Works, then that employee shall be removed from the site

3 For the purposes of this Sub-Clause:

(i) "corrupt practice" is the offering, giving, receiving or soliciting, directly or indirectly, of anything of value to influence improperly the actions of another party;

(ii) "fraudulent practice" is any act or omission, including a misrepresentation, that knowingly or recklessly misleads, or attempts to mislead, a party to obtain a financial or other benefit or to avoid an obligation;

(iii) "collusive practice" is an arrangement between two or more parties designed to achieve an improper purpose, including to influence improperly the actions of another party;

(iv) "Coercive practice" is impairing or harming, or threatening to impair or harm, directly or indirectly, any party or the property of the party to influence improperly the actions of a party.

4 The Contractor declares that:

a) They did not engage in any action to influence the Project implementation process to the detriment of the Employer, in particular no collusive practice took place nor will take place, and

The bidding proceedings, contract award, and execution have not and will not be subject to any corrupt practice as defined in the United Nations Convention to combat corruption dated 31st October, 2003.

Dated this _____ day of _____20_____

Signature _____in the capacity of_____

duly authorized to sign Tenders for and on behalf of
_____[Name of Tenderer] of

_____[Address of Tenderer]

_____[Seal or Stamp of Tenderer]

ENVIRONMENTAL AND SOCIAL COMMITMENT

I have taken due note of the importance to comply with environmental and social standards and regulations.

I, the undersigned, [……..……] acting as the duly authorized representative of […….. …….],

With respect to the submission of a bid for [……..….] in accordance with the invitation to tender No [……..….], I undertake to comply, and ensure that our subcontractors, if any, comply with international environmental and labour standards consistent with applicable law and regulations in the country of implementation of the Project, including the fundamental conventions of the International Labour Organisation (ILO) and international environmental treaties

In addition, I also undertake to adopt any environmental and social risk mitigation measures as defined in the environmental and social management plan or the notice of environmental and social impact issued by the Employer.

Dated this _____ day of _____20_____

Signature _____in the capacity of_____

duly authorized to sign Tenders for and on behalf of
_____[Name of Tenderer] of

_____[Address of Tenderer]

_____[Seal or Stamp of Tenderer]

FORM RB 1

REPUBLIC OF KENYA

PUBLIC PROCUREMENT ADMINISTRATIVE REVIEW BOARD

APPLICATION NO…….OF……..…20……...

BETWEEN

…….APPLICANT

AND

……RESPONDENT (Procuring Entity)

Request for review of the decision of the…… (Name of the Procuring Entity) of ……dated the…day of ……20…….in the matter of Tender No……..…of ……..20…

REQUEST FOR REVIEW

I/We……,the above named Applicant(s), of address: Physical address…….Fax No……Tel. No……..Email ……, hereby request the Public Procurement Administrative Review Board to review the whole/part of the above mentioned decision on the following grounds , namely:-

1.
2.
etc.

By this memorandum, the Applicant requests the Board for an order/orders that: -

1.
2.
etc

SIGNED ……..(Applicant)

Dated on…….day of ……./…20…

FOR OFFICIAL USE ONLY

Lodged with the Secretary Public Procurement Administrative Review Board on …… day of ……...20……

SIGNED
Board Secretary

DECLARATION FORM

Date _____

To _____

_____

_____

The tenderer i.e. (Name and address)_____

_____declare the following:

a) Has not been debarred from participating in public procurement.

b) Has not been involved in and will not be involved in corrupt and fraudulent practices regarding public procurement.

_____	_____	_____
Title	Signature	Date

(To be signed by authorized representative and officially stamped)

TENDER-SECURING DECLARATION FORM

[The Bidder shall complete this Form in accordance with the instructions indicated]

Date: [……] Tender No.

[……]

To:
[……

……..]

We, the undersigned, declare that:

1. We accept that, according to your conditions, bids must be supported by a Bid-Securing Declaration.
2. We accept that we will automatically be suspended from being eligible for bidding in any contract with the purchaser for the period of time of [……] starting on [……]. If we are in breach of our obligation(s) under the bid conditions, because we –
   (a) Have withdrawn our Bid during the period of bid validity specified by us in the Bidding Data Sheet; or
   (b) Having been notified of the acceptance of our Bid by the Purchaser during the period validity,
      (i) Fail or refuse to execute the Contract, if required, or
      (ii) Fail or refuse to furnish the Performance Security, in accordance with the ITT.
3. We understand that this Bid Securing Declaration shall expire if we are not the successful Bidder, upon the earlier of
      (i) Our receipt of a copy of your notification of the name of the successful Bidder; or
      (ii) Twenty-eight days after the expiration of our Tender.

4. We understand that if we are a Joint Venture, the Bid Securing Declaration must be in the name of the Joint Venture that submits the bid, and the Joint has been legally constituted at the time of bidding, the Bid Securing Declaration shall be in the names of all future partners as named in the letter of intent.

   Signed:
   [……..
   ] in the capacity of

   [……

   ……]

Name:
[…….]

Duly authorized to sign the bid for and on behalf of:

[……

…….]

Dated on the …….day

of……..[…….]

SECTION VII: CONTRACTOR'S EVALUATION CHECKLIST

Supervision Check List (1/2)

Project Title:	
Contractor:	

	Date	Name	Signature
The Engineer's Representative (Project Engineer)			
Resident Engineer			

1. This check list is for Resident Engineer to check contractor's work execution process.
2. Fill in date of checking as (day/month), mark as indicated in Filling Example, and state remarks.
3. Put this check list in the Monthly Progress Report.

Item		Check Point		before	During execution								after	Remarks
				Date /	Date /	Date /	Date /	Date /	Date /	Date /	Date /	Date /	Date /	Reason for unsatisfactory performance (Site diary No.) Corrective order by authority (Date) Excellent point to be specified
1	Execution system in general	1-1	Works Execution Programme (including its revised version if any) is submitted before the date specified in contract document	☐	☐	☐	☐	☐	☐	☐	☐	☐		
		1-2	Works Execution Programme properly reflects the given specifications and site conditions	☐	☐	☐	☐	☐	☐	☐	☐	☐		
		1-3	Execution procedures are in accordance with Works Execution Programme		☐	☐	☐	☐	☐	☐	☐	☐		
2	Equipment holding	2-1	All equipment used are properly mobilized in accordance with Works Execution Programme		☐	☐	☐	☐	☐	☐	☐	☐		
		2-2	All equipment used is well maintained during the execution of works		☐	☐	☐	☐	☐	☐	☐	☐		
3	Contractor's in-house staff	3-1	Qualified technical staff of contractor are properly assigned as specified in Works Execution Programme		☐	☐	☐	☐	☐	☐	☐	☐		
		3-2	Contractor's in-house key staff understand work process and schedule properly		☐	☐	☐	☐	☐	☐	☐	☐		
		3-3	Contractor's in-house staff give technical guidance and direction to workers and operators properly and timely		☐	☐	☐	☐	☐	☐	☐	☐		
		3-4	Communications with authority in writing is properly and timely		☐	☐	☐	☐	☐	☐	☐	☐		
4	Personnel employment	4-1	Workers and operators are deployed in accordance with Works Execution Programme		☐	☐	☐	☐	☐	☐	☐	☐		
		4-2	Wage payment is properly made on time		☐	☐	☐	☐	☐	☐	☐	☐		
5	Site base facilities	5-1	Office and stockyard are prepared in accordance with Works Execution Programme		☐	☐	☐	☐	☐	☐	☐	☐		
		5-2	Site is well maintained during the work execution and cleared on completion		☐	☐	☐	☐	☐	☐	☐	☐	☐	
		5-3	Material stored on site is properly managed during the work execution		☐	☐	☐	☐	☐	☐	☐	☐		
6	Quality and quantity management	6-1	Material testing, structural examination, and measurements are properly and routinely conducted based on specifications and Works Execution Programme		☐	☐	☐	☐	☐	☐	☐	☐		

Filling Example : ✓Check point is satisfactory ■ Check point is unsatisfactory N/A Not applicable

Supervision Check List (2/2)

Project Title:	
Contractor:	

1. This check list is for Resident Engineer to check contractor's work execution process.
2. Fill in date of checking as (day/month), mark as indicated in Filling Example, and state remarks.
3. Put this check list in the Monthly Progress Report.

	Signature
The Engineer's Representative (Project Engineer)	
Resident Engineer	

Item		Check Point		before	During execution								after	Remarks
				Date /	Date /	Date /	Date /	Date /	Date /	Date /	Date /	Date /	Date /	Reason for unsatisfactory performance (Site diary No.) Corrective order by authority (Date) Excellent point to be specified
6	Quality and quantity management	6-2	Results of material testing, structural examination and measurements are within the specifications.		☐	☐	☐	☐	☐	☐	☐	☐		
		6-3	Results of material testing, structural examination, and measurements are properly compiled as reports for confirmation		☐	☐	☐	☐	☐	☐	☐	☐		
7	Work scheduling	7-1	Understanding of critical path and its reflection on scheduling are proper		☐	☐	☐	☐	☐	☐	☐	☐		
		7-2	Actual proceedings are periodically compared to the planned schedule described in Works Execution Programme		☐	☐	☐	☐	☐	☐	☐	☐		
		7-3	Changes caused by site conditions are properly handled to keep Works on schedule		☐	☐	☐	☐	☐	☐	☐	☐		
		7-4	All works are completed within the contract term or within the extended term as allowed										☐	
8	Work safety management	8-1	No accident occurs to workers, operators, or third-parties.		☐	☐	☐	☐	☐	☐	☐	☐		
		8-2	Safety of workers and operators is considered		☐	☐	☐	☐	☐	☐	☐	☐		
		8-3	Accident prevention efforts for third-parties are proper		☐	☐	☐	☐	☐	☐	☐	☐		
		8-4	Traffic and site safety devices are properly installed and managed		☐	☐	☐	☐	☐	☐	☐	☐		
		8-5	Temporary facilities (e.g. scaffolding) are constantly checked		☐	☐	☐	☐	☐	☐	☐	☐		
9	Environmental and social management	9-1	Environmental and social mitigation efforts (e.g. against noise, vibration, emission, and dust) are conducted		☐	☐	☐	☐	☐	☐	☐	☐		
		9-2	Waste material from site is properly disposed		☐	☐	☐	☐	☐	☐	☐	☐		
		9-3	Damage to existing roads, works and services is avoided or are repaired when it occurs		☐	☐	☐	☐	☐	☐	☐	☐		
		9-4	Transportation by vehicles is properly done with no overloading, and neither material falling, leakage, nor spillage.		☐	☐	☐	☐	☐	☐	☐	☐		

Filling Example : ✓Check point is satisfactory ■ Check point is unsatisfactory N/A Not applicable

SECTION VIII: SPECIFICATIONS, DRAWINGS AND BILLS OF QUANTITIES

I. SPECIFICATIONS

Contents:

SECTION 01:	**PRELIMINARY AND GENERAL ITEMS……..**	**E-1**
01-40-001:	Mobilisation and Establishment of the Site…….....	E-1
01-40-002:	Clearance on Completion…….	E-1
01-40-003:	Insurances and Securities……	E-1
0140-004:	Quality Control Tests……	E-2
01-40-005:	Publicity Sign Boards……	E-2
01-40-006:	Traffic Control……	E-2
01-40-007:	Drinking Water……..	E-3
SECTION 02	**SETTING OUT……..**	**E-4**
02-50-001	Setting Out Horizontal Alignment……..	E-4
SECTION 04	**SITE CLEARANCE……..**	**E-5**
04-50-002	Grass cutting……	E-5
04-50-003	Bush Clearing (heavy)……	E-6
04-50-004	Bush Clearing (Light)……..	E-6
04-50-005	Pruning Tree Branches …….....	E-7
04-50-006	Trees and Stumps Removal…….....	E-7
04-50-007	Trees and Stumps Removal (>450mm girth)……	E-7
04-50-009	Rock/Boulder Removal……	E-8
04-50-010	Stripping and Grubbing	E-8
SECTION 05	**EARTHWORKS……**	**E-10**
05-40-001:	Re-Establishment of the Vertical Alignment……	E-10
05-50-007:	Excavation to Level……..	E-10
08-50-003:	Side-drain Excavation (Soft Material)……	E-11
08-50-004:	Side-drain Excavation (Hard Material)……	E-12
08-50-005:	Mitre Drains/Catchwater Drains……	E-12
05-50-008:	Spreading and Compaction for Camber formation ……	E-13
SECTION 07:	**EXCAVATION AND FILLING FOR STRUCTURES……..**	**E-14**
07-50-002	Excavation for Drainage Structures……..	E-14
SECTION 08	**CULVERT AND DRAINAGE WORKS…….**	**E-15**
08-50-002:	Ditch Cleaning-manual……	E-15
08-60-001/005:	Culvert cleaning - partially blocked……...	E-16
08-60-006/010:	Culvert cleaning - fully blocked……	E-17
08-60-016/035:	Concrete Pipe Culverts……	E-17
08-70-001	Headwall Repair - masonry ……	E-19
08-70-002:	Headwall Repair - concrete……	E-19
08-70-003	Minor Drainage Structures - masonry……..	E-20
08-70-004	Minor Drainage Structures - concrete…….....	E-20
08-70-005	Scour Checks – concrete……	E-21
08-70-006	Scour Checks – masonry……..	E-21
08-70-007	Scour Checks - wooden stakes……	E-21
08-70-016	Stone Pitching……..	E-23
08-80-002	Gabion Installation……	E-24
08-80-003	Rockfill to Gabions……	E-24
08-80-004	Drift Desilting……	E-25
08-80-005	Drift Repairs - Concrete……	E-25
08-80-006	Drifts - Stone Pitching……	E-26
08-80-007	Drifts - Concrete……..	E-26
08-80-008	At-level Scour Checks……	E-26
08-80-009	Stone Chute Stabilisation……	E-27
08-80-010	Stone Post Chute Stabilisation……	E-27
08-80-011	Stone Check Dams……..	E-28

08-80-012	Stone and Post Check Dams	E-28
SECTION 10	**GRADING AND GRAVELLING**	**E-29**
10-50-002:	Carriageway Grading - heavy	E-30
10-50-004:	Carriageway Grading - light	E-30
10-80-004:	Removal of Overburden - labour	E-31
10-80-009:	Removal of Overburden - equipment	E-31
10-80-005:	Haulage - Overhaul	E-31
10-80-007	Excavation; Free hand; Spreading and Compaction of Gravel-Labour	E-32
10-80-008	Excavation; Free Haul, Spreading and Compaction of Gravel-Equipment	E-34
10-80-010	Restoration of Quarries and Borrow Pits	E-34
SECTION 12	**NATURAL MATERIAL BASES**	**E-35**
12-50-001	Hand Packed Stone Pitching	E-35
SECTION 15	**BITUMINOUS SURFACE TREATMENTS**	**E-36**
15-70-008	Slurry Seal	E-38
15-70-010	Surface Dressing – Single	E-39
15-70-011	Surface Dressing – Double	E-39
15-70-012	Cold Asphalt	E-40
15-70-013	Otta Seal – Single	E-40
15-70-014	Otta Seal – Double	E-40
SECTION 17	**CONCRETE WORKS**	**E-42**
17-40-001	Concrete Road Section	E-42
SECTION 20	**ROAD FURNITURE**	**E-43**
20-50-001:	Traffic Sign Maintenance	E-43
20-50-002	Erection of Traffic Signs	E-43
20-50-004	Marker Post Replacement	E-44
20-70-001	Guardrail Repair	E-44
20-70-003	Erection of Guardrails	E-45
SECTION 22	**DAYWORKS**	**E-46**
22- Activity Codes		
SECTION 25:	**HIV/AIDS AWARENESS AND PREVENTION CAMPAIGN**	**E-47**
25-50-001	HIV/AIDS Awareness Campaign	E-47
25-50-002	HIV/AIDS Prevention Campaign	E-47
25-50-003	HIV/AIDS and Cross-cutting Issues	E-47

SECTION 01 : PRELIMINARY AND GENERAL ITEMS

Scope:

This section comprises those items that are required at the Commencement and Completion of the Works or that are Provisional Items applicable for the duration of the Works.

01-40- 001 Mobilisation and Establishment of the Site

The Contractor shall provide all equipment, tools, materials, temporary offices, stores and housing required to carry out the Works.

The Contractor shall ensure that all possible means of protection are given to the labour force at all times. Such protection shall include provision of high visibility clothing or vests, goggles and masks for workers in potentially dangerous locations or dealing with potentially harmful materials. The Contractor shall also maintain first aid kits with a minimum of the following items:-

- Non Stick wound dressing
- Selection of plaster/band aids
- Crepe bandages
- Gauze and cotton wool
- Antiseptic solution (washing wounds)
- Antiseptic cream – Betadine, Burnol
- Pain killers Panadol, Disprin
- Anti diarrhoea – Immodium, Diadis, Charcoal
- Anti histamine – Piriton, Triludan
- Anti nausea – Stemetil
- Eye ointment
- Oral re-hydration sachets
- Surgical gloves

Measurement and Payment:

No separate payment shall be made for this item. The Contractor shall include the costs in the rates for other measured items.

01-40- 002 Clearance on Completion

On Completion of the Works, all temporary housing, equipment, signs and tools shall be removed from the site, and the site left in good order to the satisfaction of the Engineer.

Measurement and Payment

The Lump Sum payment will be made upon approval by the Engineer that the Clearance has been satisfactorily carried out.

01-40-003 Insurance and Bonds

The Contractor shall provide Insurance and Sureties in accordance with relevant Clauses in the Conditions of Contract.

Measurement and Payment

Lump Sum payment for this item will be made upon the production of satisfactory evidence by the Contractor that Insurances and Securities have been effected.

01-40-004 Quality Control Tests

The Engineer may instruct the Contractor during the progress of the Works to carry out quality control tests to check materials and standards of workmanship, against the Specifications.

Where such tests indicate defective standards the Engineer shall instruct the Contractor to rectify the defects to the Engineer's satisfaction and at the Contractor's expense.

Measurement and Payment

The Engineer shall include a Provisional Sum for this item to be expended only as and when the Contractor is instructed to carry out tests.

01-40-005 Publicity Sign Boards

The Contractor shall provide Sign Boards as specified on the Drawings or as directed by the Engineer. The Sign Boards shall be placed at the beginning and end of the road or road section covered by this Contract.

Sign Boards shall be maintained for the duration of the Works, and removed on completion.

Quality Control

The Engineer shall check that Sign Boards have been erected in accordance with Drawings and Specifications.

Measurement: Number

The unit of measurement shall be number of Sign Boards erected

Payment

The unit rate shall be the full compensation for labour, tools, materials and incidental costs required for carrying out the work.

01-40- 006 Traffic Control

The Contractor shall provide warning signs, fences, barriers, detours, which shall be

properly positioned in advance of the Works to ensure that traffic is well and safely accommodated for the duration of the Works.

Traffic signs and other traffic control facilities shall be kept in good condition and located in positions where they are visible to road users.

Quality Control

The Engineer shall check regularly that traffic control measures are satisfactory.
Measurement and Payment

A Lump Sum shall be paid on a Monthly basis upon the approval of the Engineer that satisfactory control measures are in place.

01-40- 007 Drinking Water

The Contractor shall provide safe drinking water on site for workers at a reasonable distance from all work locations, for the duration of the Works.

Quality Control

The Engineer shall check regularly that adequate supplies of water are available throughout the Site.

Measurement and Payment

A Lump Sum shall be paid on a Monthly basis upon the approval of the Engineer that adequate supplies have been provided.

SECTION 02 : SETTING OUT

Scope

This section covers the activities required in the re-establishment of the horizontal alignment of the road include setting out the centre line, cross section widths, drains and structures.

02-50-001: Setting Out the Horizontal Alignment

The Contractor shall set out the centreline to follow the existing road alignment unless instructed otherwise by the Engineer.

The minimum standards as shown in Table 2.1 shall apply

Table 2.1 Alignment Standards

Standard	Flat and Rolling Terrain	Hilly Terrain
Horizontal Curves		
Desirable Minimum radius	100m	50m

The cross section details of the road shall be as shown on the Drawing or as directed by the Engineer.

Work Method

The Contractor shall use **Labour** methods to carry out this item.

Quality Control

- Centreline pegs shall be set at 10m intervals on straight sections and 5m on curves
- Chainage or reference pegs shall be set out and marked at 20m intervals and located at one metre outside the cleared width and on both sides of the road.
- Cross section widths shall be checked at 10m intervals and shall have maximum tolerances of +/- 25mm

Measurement Unit: m

The measurement shall be the linear metres of the road

Payment

The unit rate shall be the full compensation for labour, tools, materials and incidental costs required for carrying out the work.

SECTION 04 : SITE CLEARANCE

Scope

This section covers the clearance of bushes, shrubs, grasses, trees, stumps, boulders, stripping and grubbing of the topsoil, removal of anthills and other unsuitable materials for the specified widths of the road, quarry and borrow areas. The distinction between light and heavy bush shall be decided by the Engineer.

The minimum site clearing widths for each of the activities shall be as shown in Table 4.1

Table 4.1: Site Clearing Widths

Road Category	*Running Surface*	*Stripping and Grubbing*	*Trees, Stumps, Boulders*	*Bush Clearing*
A/B/C + Secondary Roads	6.0 m	10.6 m	10.6 m	14.0 m
D/E + Minor Roads	5.4 m	10.0 m	10.0 m	13.0 m
RAR Roads	4.5 m	7.9 m	8.0 m	11.0 m
Minor / RAR roads with insufficient widths or Temporary Sections	3.5 m	6.9 m	7.0 m	9.0 m

04–50–002 Grass Cutting (Manual)

Grass shall be defined as any form of plant growth including small shrubs having a girth of not more than 100mm measured at height of 200mm above ground level.

The grass shall be cut to height of not more than 50 mm above the ground. The width limits shall be as instructed by the Engineer. All cut grass shall be removed from the carriageway, side drains, mitre drains and inlets and outlet drains of structures/culverts and deposited in approved spoil dumps

EA Burning of the grass shall not be allowed and care shall be taken not to damage roadside fixtures such as signs and marker posts.

This activity shall be carried out twice, each time before the rainy season or as shall be instructed by the Engineer.

Work Method

The Contractor shall use **Labou**r to carry out this item of work.

Quality Control

The road width for grass cutting shall be measured at 50-m intervals and shall be free of grass after the operation.

Measurement: m^2

The measurement shall be area of grass cut, based on the standard width and measured length of clearing.

Payment

The unit rate shall be full compensation, for labour, materials, tools, and incidental costs required to carry out the work.

04-50- 003 Bush Clearing (Heavy)

Where the Engineer designates an area as Heavy Bush (based on the undergrowth density) the Contractor shall clear all vegetation including small trees, shrubs and undergrowth, and their root systems, and shall salvage any re-useable timber or other material by cutting into logs and stacking. Other cleared material shall be collected and disposed of off-site as directed by the Engineer.

Work Method

The Contractor shall use **Labour** methods for this item

Quality Control

The Engineer shall check the cleared widths at 50 metre intervals

Measurement Unit: m^2

The measurement shall be the area cleared to the specified width over the length as instructed by the Engineer.

Payment:

The unit rate shall be the full compensation for all labour, tools and incidental costs required to complete the work.

04-50- 004 Bush Clearing (Light)

The Contractor shall clear all vegetation including small trees, and shrubs with their root systems. Grasses and any undergrowth shall be cut to a height of not more than 100mm. The cleared material shall be collected and disposed of away from the side drains and in a manner that causes no visibility obstruction to traffic.

Work Method

The Contractor shall use **Labour** methods for this item

Quality Control

The Engineer shall check the cleared widths at 50 metre intervals.

Measurement Unit: m^2

The measurement shall be the area cleared to the specified width over the length as instructed by the Engineer.

Payment:

The unit rate shall be the full compensation for all labour, tools and incidental costs required to complete the work.

04-50-005 Pruning Tree Branches

Where instructed by the Engineer the Contractor shall trim tree branches to improve visibility. Cut material shall be collected and disposed of as directed by the Engineer and burning of waste material shall not be permitted.

Work Method

The Contractor shall use **Labour** for this item.

Quality Control

The Engineer shall check for visibility improvement.

Measurement and Payment

A Provisional Sum shall be allowed for this item, which shall be paid under Dayworks.

04-50- 006 Trees and Stumps Removal (200-450mm girth)

Trees and Stumps outside the construction width but within the road reserve having a trunk

girth of between 200-450mm at a point 600mm above the ground shall only be removed on the instruction of the Engineer.

The Contractor shall excavate around any trees to be removed to a depth not less than 0.5 m before cutting the roots. Existing stumps shall be uprooted in the same manner. All holes left by the removal of trees and stumps shall be back-filled with approved material and compacted to existing ground level. Cut material and stumps shall be collected and disposed of as directed by the Engineer. Burning of waste material shall not be permitted.

Work Method

The Contractor shall use **Labour** methods for this item.

Quality Control

The Engineer shall approve the removal, backfilling and satisfactory disposal of all waste material.

Measurement Unit: No

The measurement shall be the number of trees and stumps removed.

Payment

The unit rate shall be the full compensation for all labour, tools and incidental costs required to complete this item.

04-50-007 Trees and Stump Removal (>450mm girth)

All the requirements of item 04-003 shall apply for trees and stumps greater than 450mm girth. In addition any re-useable timber from trees removed shall be cut into logs not more than 1.5 metres long and stacked as directed by the Engineer.

Work Method

The Contractor shall use **Labour** methods, with appropriate sawing tools and equipment for this item.

Quality Control

The Engineer shall approve the removal, backfilling and satisfactory disposal of all waste material.
Measurement Unit: No

Measurement shall be the number of trees and stumps removed

Payment:

The unit rate shall be the full compensation for all labour, tools, equipment and incidental costs required to complete this item.

04 -50-009 Rock/Boulder Removal

The Contractor shall remove in a manner agreed by the Engineer, rocks and boulders greater than 1.5 m girth using labour and appropriate equipment as necessary. Boulders shall be disposed of outside the road area.

Work Method

The Contractor shall use **Labour** and appropriate equipment methods for this item.

Quality Control

The Engineer shall approve the removal and satisfactory disposal of the boulders.

Measurement Unit: Provisional Sum

A Provisional Sum shall be included for this item

Payment:

Payment shall be made on a Dayworks basis.

04-50-010 Stripping and Grubbing

The Contractor shall remove, over the widths shown in Table 4.1, topsoil including anthills, loose boulders up to 1.5m girth and other unsuitable material and deposit the debris outside the cleared area as directed by the Engineer.

Work Method

The Contractor shall use **Labour** methods for this item

Quality Control

The Engineer shall approve the stripped and grubbed area and the satisfactory disposal of waste material.

Measurement Unit m^2

The measurement shall be the area cleared as directed by the Engineer

Payment

The unit rate shall be the full compensation for all labour, tools and incidental expenses required to complete this item.

SECTION O5 : EARTHWORKS

Scope

This section covers the excavation of soil and the placing, watering and compaction of hard and soft material to form the road formation.

05-40- 001: Re - Establishment of the Vertical Alignment

The Contractor shall re-establish the vertical alignment of the road section which includes the setting out excavation of horizontal slots marking the level road platform.

The width of the slots shall be 0.5 m and they shall be set out at 10m intervals along the straight section and 5m on the curve sections of the road. Each slot shall be compacted using hand rammers until no more imprints of the rammer on the surface of the slot can be seen. The length of each slot shall be equal to the formation width of the road.

Vertical alignment standards shall be those set out in Table 5.1

Table 5.1 Vertical Alignment Standards

Standard	Flat & Rolling Terrain	Hilly Terrain
Gradients		
Desirable Minimum	2%	2%
Desirable Maximum	8%	10%
Absolute Maximum	10%	12%

Work method

The Contractor shall apply **Labour** methods to carry out this item work.

Quality Control:

- The hand rammer shall be not less than 5kg
- The level of the slot shall have a tolerance of $\pm$ 50 mm
- The longitudinal profile of the road shall be checked at every third slot and shall have a maximum tolerance of $\pm$ 50mm

Measurement Unit: m

The measurement shall be linear metres of road alignment set out

Payment:

The unit rate shall be the full compensation for labour, tools, materials and incidental costs required for carrying out the work.

05-50- 007 Excavation to Level and Compaction

The Contractor shall cut material to form the level road platform and place the excavated material as fill or in spoil areas approved by the Engineer. Where material needs to be borrowed excavation shall only be from borrow areas approved by the Engineer.

The fill layers to be compacted shall not exceed 150mm loose depth.

Compaction of the fill material shall be carried out from the edges to the centre by overlapping passes of the compaction equipment. The number of passes shall be as directed by the Engineer dependent upon the equipment used and the material being compacted. Unless otherwise instructed the moisture content of the material shall be within ± 2% of optimum. Where additional moisture is required water shall be applied in an even manner such that no longitudinal or transverse flow occurs.

The Engineer may instruct the Contractor to carry out density tests on the compacted material to ensure that an acceptable standard has been achieved.

Work Method

The Contractor shall use **Labour** and appropriate compaction **Equipment** to carry out this item of work.

Quality Control

- The width of the platform shall be checked at intervals of 50 m and shall have a tolerance of + / - 50mm.
- The level platform shall be horizontal in the transverse direction and shall have a tolerance of + / - 15 mm under a 2 metre straight edge.
- The longitudinal profile shall have a maximum tolerance of + / - 50 mm over a 30m length of gradient.
- Compaction shall show no movement of material under the roller.
- Compaction test standard shall be 95% MDD (AASHTO T99)

Measurement Unit: m^3

The measurement shall be the volume of compacted fill material forming the level platform.

Payment

The unit rate shall be the full compensation for labour, tools, equipment, water and

incidental costs required for carrying out the work.

08-50-003 : Side-drain Excavation (Soft Material)

The Contractor shall excavate side drains to the profiles shown on the Drawings or as directed by the Engineer.

The material from the excavations shall be used for the formation of the camber. Where additional material is required to achieve the required camber, the widths of the side drains may be increased, with the approval of the Engineer.

Locations of the side drains shall be as shown on the Drawings or as directed by the Engineer, and the Contractor shall use the appropriate ditch template to control the excavations

Work method

The Contractor shall apply **Labour** methods to carry out this item

Quality Control

- The dimensions of the side drains shall be checked at 50m intervals and shall have a tolerance of $\pm$ 50mm
- The longitudinal profile of the side drains shall be checked at 30m intervals and shall have a tolerance of +/-50mm.

Measurement Unit m^3

Measurement shall be the volume of material excavated to form the side drains, and deposited for camber formation.

Payment

The unit rate shall be the full compensation for labour, tools and incidental costs required for carrying out the work.

08-50-004 Side-drain Excavation (Hard material)

Where, in the opinion of the Engineer, the material to be excavated to form the side drains may be classified as hard the Contractor shall carry out the excavation in accordance with 05-003 and shall be compensated under this item,

Work Method:

The Contractor shall apply **Labour** methods with appropriate **Equipment** to carry out this item.

Quality Control:

The Engineer shall measure the volume of the excavation classified as Hard material

Measurement Unit: m^3

The measurement shall be the volume of material excavated and deposited to form the camber

Payment:

The unit rate shall be the full compensation for all labour, tools, equipment and incidental costs required to complete the work.

08-50- 005 Mitre Drains/Catchwater Drains

i. Labour ii. Equipment

The Contractor shall excavate mitre drains and catchwater drains to the dimensions shown on the Drawings and at locations as directed by the Engineer. They shall be excavated in a manner to minimise erosion at the discharge point. The material excavated from the drains shall be used to form the side drain bund directing water to the mitre-drain, and a bund on the lower side of the cut-off drain, or disposed of as directed by the Engineer.

Work Method

The Contractor shall use either **Labour** or **Equipment** as directed by the Engineer to carry out this work.

Quality Control

- The longitudinal profile shall have a gradient of maximum 4%.
- The dimensions of the mitre drains shall have maximum tolerances of $\pm$20mm
- The location of the mitre drains shall be approved by the Engineer.

Measurement Unit: m^3

The measurement shall be the volume of material excavated as measured on site in approved drains.

Payment

The unit rate shall be full compensation for labour, tools, equipment and incidental costs required for carrying out the work.

05-50- 008 Spreading and Compaction for Camber Formation

The Contractor shall spread and compact the material deposited from the side drains to form the camber on the road, in accordance with the Drawings or as directed by the Engineer, and shall check the profile with the appropriate camber board.

Compaction shall be carried out from the edges to the centre line by overlapping passes of the compaction equipment. The number of passes shall be as directed by the Engineer dependent upon the equipment used and the material being compacted. Unless otherwise instructed the moisture content of the material shall be within $\pm$ 2% of optimum. Where additional moisture is required water shall be applied in an even manner such that no longitudinal or transverse flow occurs.

The Engineer may instruct the Contractor to carry out density tests on the compacted material to ensure that an acceptable standard has been achieved.

Work method

The Contractor shall use **Labour** and appropriate compaction **Equipment** to carry out this item.

Quality Control

- The width of the carriageway including the shoulders shall be checked at 50m intervals and shall have a tolerance of +50/-20 mm.
- The camber shall be checked 50m intervals and shall have a tolerance of +/- 1%.
- Compaction shall show no movement of material under the roller
- Compaction test standard shall be 98% MDD (AASHTO T99)

Measurement Unit m^2

The measurement shall be the area of camber formed, according to the specified carriageway width and measured length of road.

Payment

The unit rate shall be the full compensation for all labour, tools, equipment, water and incidental costs required for carrying out the work.

SECTION 07: EXCAVATION AND FILLING FOR STRUCTURES

Scope

This section covers all Works in connection with the excavation for concrete pipe culverts; inlet and outlet structures; drifts and drainage protection Works;

07-50- 002 Excavation for Drainage Structures

The Contractor shall excavate trenches for culverts; foundations for head walls, wing walls; inlet and outlet aprons and other drainage structures to the dimensions and levels shown on the Drawings or as directed by the Engineer. The excavations shall be kept free of water and shall be compacted with hand rammers of not less than 5kg.

The Engineer shall approve all excavations before the Contractor shall be permitted to proceed with the construction.

The Contractor shall take all necessary precautions to safeguard the stability and safety of the excavations.

Work Method

The Contractor shall apply **Labour** methods to carry out this item.

Quality Control

- The dimensions of the excavations shall have a tolerance of + / - 50mm
- The invert levels shall have a tolerance of + / - 50mm
- The trench bottom gradients shall have a tolerance of + / - 20mm over the length of the trench

Measurement Unit m^3

The measurement shall be volume of material excavated measured net according to the Drawings.

Payment

The unit rate shall be the full compensation for labour, tools, and any incidental costs required for carrying out the work.

SECTION 08: CULVERT AND DRAINAGE WORKS

Scope

This section covers all Works in connection with the installation of concrete pipe culverts;

inlet and outlet structures; drifts and drainage protection Works; and the construction of Scour Checks

08- 50-002: Ditch Cleaning (Manual)

i. Partially silted

Partially silted drains are those that are less than half silted and require only cleaning.

All deposited material, debris, and vegetation shall be removed and the drain shaped to the original cross-section and left in a free-draining condition. Suitable material may be used to fill depressions and potholes on the carriageway. All debris and other unsuitable material removed from the side drains shall be disposed of well clear of the drainage system in approved spoil dumps where it will not cause any obstruction or be washed back.

The side drains, mitre drains and catchwater drains shall be cleaned before the onset of the rains or as directed by the Engineer.

Work Method

The Contractor shall use **Labour** to carry out this item of work

Quality Control

- Appropriate drain templates shall be used to check and control the dimensions of the drains.
- The longitudinal profile of the drains shall be checked using boning rods, to ensure free flow.

Measurement Unit: m

The measurement shall be the length of drain desilted or cleaned to the specified cross-section.

Payment

The unit rate shall be full compensation, for labour, tools, and incidental costs required to carry out the work.

ii. Fully silted

Fully silted drains shall be those that are greater than half-silted and require re-excavation or reshaping.

All deposited material, debris, and vegetation shall be removed and the drain shaped to the original cross-section and left in a free-draining condition. Suitable material may be used to fill depressions and potholes on the carriageway. All debris and other unsuitable material removed from the side drains shall be disposed of well clear of the drainage system in approved spoil dumps where it will not cause any obstruction or be washed back.

The side drains shall be desilted or re-excavated before the onset of the rains, or as directed by the Engineer.

Work Method

The Contractor shall use **Labour** to carry out this item of work

Quality Control

- Appropriate drain templates shall be used to check and control the dimensions of the drains.
- The longitudinal profile of the drains shall be checked using boning rods, to ensure free flow.

Measurement Unit: m

The measurement shall be the length of drain re-excavated or re-shaped to the specified cross-section.

Payment

The unit rate shall be full compensation for labour, tools, and any incidental costs required to carry out the work.

08-60-001/005: Culvert Cleaning (partially blocked)

08-60-001	300mm	dia
08-60-002	450mm	dia
08-60-003	600mm	dia
08-60-004	900mm	dia
08-60-005	1200 mm	dia

This activity involves the cleaning of culverts of specified sizes including pipe barrels, the outlet/inlet structures, and the outlet drains, keeping them free of all debris, weed, silt and any obstruction to ensure free passage of water at all times. The debris shall be deposited in approved spoil dumps as directed by the Engineer

Partially blocked culverts shall be those with less than half of the barrel blocked.

Correct widths and slopes of the outlet drains shall be maintained. The gradient of the outlet drain shall be not less than 2 %.

All broken culvert barrels discovered in the course carrying out this activity shall be reported to the Engineer.

This activity shall be carried out before the rains, or as directed by the Engineer.

Work Method

The Contractor shall use **Labour** to carry out this item of work

Quality Control

The culverts shall be checked as free of debris to the satisfaction of the Engineer.

Measurement Unit: **m**

The measurement shall be the length of culvert, including the outlet drain, cleaned

Payment

The unit rate shall be full compensation for labour, tools and incidental costs required to carry out the work.

08- 60 - 006/7/8/9/10 : Culvert Cleaning (Fully blocked):

08 - 60 - 006 300mm dia;
08 - 60 - 007 450mm dia;
08 - 60 - 008 600mm dia;
08 - 60 - 009 900mm dia;
08 - 60 - 010 1200mm dia

This activity involves the cleaning of culverts of specified sizes including pipe barrels, the outlet/inlet structures, and the outlet drains, keeping them free of all debris, weed, silt and any obstruction to ensure free passage of water at all times. The debris shall be deposited in approved spoil dumps as directed by the Engineer

Fully blocked culvert shall be those with greater than half of the barrel blocked.

Correct widths and slopes of the outlet drains shall be maintained. The gradient of the outlet drain shall be not less than 2 %.

All broken culvert barrels discovered in the course of carrying out this activity shall be reported to the Engineer.

This activity should be carried out before the onset of the rains, or as directed by the Engineer.

Work Method
The Contractor shall use **Labour** to carry out this item of work.

Quality Control

The culverts shall be checked as free from debris, to the satisfaction of the Engineer.

Measurement Unit: m

The measurement shall be the length of culvert, including the outlet drain cleaned.

Payment

The unit rate shall be full compensation for labour, tools and incidental costs required to carry out the work.

08-60-016/035 Concrete Pipe Culverts

08-60-016	300	mm	haunched	(Type II)
08-60-017	300	mm	unhaunched	(Type 1)
08-60-018	450	mm	haunched	(Type II)
08-60-019	450	mm	unhaunched	(Type 1)
08-60-020	600	mm	haunched	(Type II)
08-60-021	600	mm	unhaunched	(Type I)
08-60-022	900	mm	haunched	(Type II)
08-60-023	900	mm	unhaunched	(Type I)
08-60-024	1200	mm	haunched	(Type II)
08-60-025	1200	mm	unhaunched	(Type I)
08-60-026	300	mm	semi-surround	(Type III)
08-60-027	300	mm	surround	(Type IV)
08-60-028	450	mm	semi-surround	(Type III)
08-60-029	450	mm	surround	(Type IV)
08-60-030	600	mm	semi-surround	(Type III)
08-60-031	600	mm	surround	(Type IV)
08-60-032	900	mm	semi-surround	(Type III)
08-60-033	900	mm	surround	(Type IV)
08-60-034	1200	mm	semi-surround	(Type III)
08-60-035	1200	mm	surround	(Type IV)

The Contractor shall supply, lay and joint concrete pipes to form culverts, including the concrete bedding; haunching or surrounds; and backfilling, in accordance with the Drawings for the Type and diameter specified in the Contract or directed by the Engineer.

The pipes shall be of Class 20/20 concrete, at least 28 days cured, and manufactured on site or procured from a supplier approved by the Engineer. The pipes shall be laid on a bedding of Class 15/20 concrete of dimensions as shown on the Drawings and jointed with cement mortar 1:4.

The culvert gradient including the outlet shall be a minimum 2%.

The pipes shall be haunched or surrounded, according to the Type specified, with Class 15/20 concrete to the dimensions shown on the Drawings or as directed by the Engineer.

Backfilling shall be carried with approved material and compacted in layers not exceeding 150 mm loose depth and placed evenly on each side of the pipe. Ramps shall be shaped to achieve a minimum overfill of 75% of the pipe diameter, and shall be tapered back on the carriageway to provide a gradual approach, as directed by the Engineer.

If the Contractor wishes to construct culverts in-site, using inflatable or collapsible forms the Engineer's approval shall first be sought for the proposed working method.

On completion the inside of the culvert shall be smooth, without displaced joints or other obstructions and true to line and level.

Work Method

The Contractor shall use **Labour** and appropriate **Equipment** to carry out this item work

Quality Control

- Concrete quality shall be checked for cracks, honey combing, and other defects.
- Before the pipes are laid, the gradient of the concrete bedding shall be checked and shall not be less than 2%
- The joints shall be checked to see that they have been properly made.

Measurement Unit: m

The measurement shall be in linear metres of the installed Type and size of culvert specified, measured net according to the Drawings.

Payment

The unit rate shall be the full compensation for labour, tools, materials, equipment and any other incidentals that may be required in carrying out the work.

08- 70- 001 Head Wall Repair - Masonry

This activity involves the repairs to damaged head walls and wing walls built in masonry.

Where directed by the Engineer, the masonry walls shall be inspected and loose or missing stone re-secured or replaced. Damaged pointing shall be repaired with cement mortar 1:4 and finished flush with the stonework.

Work Method

The Contractor shall use **Labour** to carry out this item of work

Quality Control

- The stability of the walls and the pointing shall be to the satisfaction of the Engineer.

Measurement Unit: No

The measurement shall be the number of walls repaired as directed by the Engineer.

Payment

The unit rate shall be full compensation for labour, materials, tools, and incidental costs required to carry out the work.

08-70-002 Headwall Repair - Concrete

The activity involves the repairs to damaged concrete headwalls and wingwalls, and to inlet/outlet concrete aprons. Concrete walls shall be inspected and repair works carried out as instructed by the Engineer to include breaking out and replacement of damaged concrete with similar material, and the rendering of open texture areas with cement mortar 1:4. Broken wall sections shall be re-built in 20/20 (1:2:4) concrete within formwork erected on the correct lines and levels in accordance with the Standard Drawings. Areas of new concrete and mortar shall be protected from direct sunlight and kept moist for 3 days.

Quality Control

The work shall be carried out to the satisfaction of the Engineer.

Measurement Unit: No

The measurement shall be the number of walls/aprons repaired.

Payment

The unit shall be full compensation for labour, materials, tools, and incidental costs required to carry out the work.

Minor Drainage Structures - Masonry

08-70-003 Type I
08-70-016 Type 2
08-70-017 Type 3(a)
08-70-018 Type 3(b)

08-70-019 Type 4

The Contractor shall construct inlet and outlet structures for culverts including headwalls, wingwalls in stone masonry or concrete block, and aprons in concrete to the dimensions and levels shown on the Drawings or as directed by the Engineer. The walls shall be built on foundations of class 15/20 concrete and jointed with cement mortar 1:4. The aprons shall be in Class 20/20 concrete and after laying the surface shall be kept moist for 3 days.

Work Method

The Contractor shall use **Labour** to carry out this item.

Quality Control

- The dimensions of the structures shall have a tolerance of + / - 10mm
- The levels shall have a tolerance of + / - 10mm
- The mortar joints shall be finished flush with the face of the walls.

Measurement Unit: m^3

EB

The measurement shall be the volume of the structures constructed, in whichever material, measured net according to the Drawings.

Payment

The unit rate shall be the full compensation for labour, tools, materials and any other incidentals that may be required in carrying out the work.

Minor Drainage Structures – Concrete

08-70-004 Type I
08-70-021 Type 3(a)
08-70-022 Type 3(b)
08-70-023 Type 4

The Contractor shall construct inlet and outlet structures for culverts in concrete to the dimensions and levels shown on the Drawings or as directed by the Engineer.

Concrete shall be Class 20/20 unless otherwise specified. The formwork for the walls shall be erected on the concrete foundations, to the correct dimensions, and shall be approved by the Engineer before concrete is poured. Concrete shall be poured in a single lift and the top surface shall be kept moist for 3 days. Formwork may be struck after 2 days or as directed by the Engineer.

The Contractor shall use a concrete vibrator or other means approved by the Engineer to ensure full compaction of the concrete.

Work Method

The Contractor shall use both **Labour** and appropriate **Equipment** to carry out this item.

Quality Control

- The dimensions of the structures shall have a maximum tolerance of + 20mm / - 10mm
- The workability and mix of concrete shall be checked using the slump test and shall have a slump limit as directed by the Engineer. The frequency of testing shall be determined by the Engineer
- The concrete shall be checked for cracks, honey combing and other defects at the time of striking the formwork.

Measurement Unit: m^3

The measurement shall be the volume of concrete in the completed structure, measured net in accordance with the Drawings.

Payment

The unit rate shall be the full compensation for labour, tools, materials, formwork, equipment and other incidentals that may be required in carrying out the work.

08–70- 005 Scour Checks (Concrete)

08-70-006 Scour Checks (Masonry)

08-70-007 Scour Checks (Wooden Stakes)

The Contractor shall construct scour checks using either stones, stakes, or concrete as instructed by the Engineer.

Construction of concrete scour checks shall be in class 20/20 concrete, unless otherwise specified, and to the details shown in the Drawings.

Spacing for scour checks shall be as shown in Table 8.1, or as directed by the Engineer.

Table 8.1 : Scour checks spacing

Gradient of Drain	Scour Check Spacing	Gradient of Drain	Scour Check Spacing
4% or less	not required	8%	7.5m

5%	20m	9%	6m
6%	15m	10%	5m
7%	10m	>10%	4m

Work method

The Contractor shall use **Labour** to carry out this item.

Quality Control

The spacing of the scour checks shall have a tolerance of + / - 0.5m
The sizes of the stakes and stones used shall be in accordance with the Drawings
The shape of the scour check shall be checked using the scour check template.

Measurement Unit: No.

The measurement shall be the **number** of scour checks constructed.

Payment

The unit rate shall be full compensation, for labour, tools, materials and incidental costs required for carrying out the work.

08 – 70 – 008: Scour Check Repair - masonry
08 – 70 – 009: Scour Check Repair - wooden
08 - 70 - 010: Scour Check Repair - concrete

This activity involves the repair of Scour Checks using stones or wooden stakes or concrete. The construction details shall be shown in the Drawings or as instructed by the Engineer.

Scour checks shall be inspected and the repairs carried out as directed by the Engineer, which shall include replacement of missing or broken stonework and stakes; and the repair of damaged concrete, to the original lines, levels, and Specifications.

Work Method

The Contractor shall use **Labour** to carry out this item work.

Quality Control

EC

The sizes of the stakes and stones used shall be as the original construction.
The shape of the scour check shall be checked using the scour check template.

Measurement: No.

The unit rate of measurement shall be the number of scour checks repaired.

Payment

The unit rate shall be full compensation, for labour, tools, materials, and incidental costs required for carrying out the work.

08- 70- 011 : Stone Pitching Repair

This activity involves the repair of stone pitching on slopes, in inlet/outlet aprons and access drifts. The stone pitching shall be inspected and repairs carried out as directed by the Engineer, including the replacement and re-bedding of missing or loose stones; the repair of mortar jointing: and the cleaning out of weepholes, as required. All work shall be to the lines and levels of the original construction with new stonework and mortar being flush with the adjacent materials.

Work Method

The Contractor shall use **Labour** to carry out this work

Quality Control

The work shall be carried out to the satisfaction of the Engineer.

Measurement Unit: m^2

The measurement shall be the net surface area of the repairs.

Payment

The unit rate shall be full compensation, for labour, tools, materials, and incidental costs required to carry out the work.

08-70- 016 : Stone Pitching

The Contractor shall lay stone pitching at locations shown on the Drawings or as directed by the Engineer, which shall include levelling the area to be covered with stone pitching, collecting stones, laying stones, applying mortar to the joints and constructing weep holes, if required.

The area to be covered with stone pitching shall be trimmed to the level and slope shown on the Drawings or as directed by the Engineer. The prepared surface shall be firm and well compacted, with hand rammers.

The stones shall have minimum dimensions of 150mm and maximum 300mm and shall be set on the flat side and securely bedded, with the largest dimensions at right angles to the flow of water, in an interlocking pattern so as to leave only a minimum of voids between the stones which shall be filled with suitably shaped and tightly wedged spalls. The top of the pitching shall be finished flush with the adjacent material.

The stones shall be placed in full contact with the surface and bedded into cement mortar 1:4 with a minimum thickness of 100 mm. The mortar shall be worked into the pitching so that the voids between the stones are filled to the full depth of the pitching. The mortar shall be finished flush with the surface of the stones.

Weep holes shall be provided to stone pitching on slopes as directed by the Engineer.

The surface of the stone pitching shall be protected from direct sunshine and kept moist for 2 days.

Work Method

The Contractor use **Labour** to carry out this item.

Quality Control

ED

- The quality of pitching shall be checked for gaps and voids.
- The dimensions of the area of stone pitching shall have a tolerance of + / - 100mm

Measurement Unit: m^2

The measurement shall be the total area of pitching calculated as the net area, measured on the slope.

Payment

The unit rate shall be full compensation, for labour, tools, materials, and incidental costs required for carrying out the work.

08-80- 002 : Gabions

The Contractor shall provide and install Gabions as retaining walls and anti-erosion structures at locations shown on the Drawings or as directed by the Engineer.

Gabions shall include mattresses and boxes and for purposes of construction, measurement and payment, no distinction shall be made between them.

Gabions shall be ‘Maccaferi” boxes or ‘Reno’ matresses or equivalent approved by the Engineer.

The surfaces on which the Gabions are to be laid prior to being filled with rock shall be levelled to the depths and dimensions shown on the Drawings or as directed by the Engineer.

Gabion boxes shall be tied together with 3 mm galvanised binding wire securing all edges at 150mm intervals.

Work Method

The Contractor shall use **Labour** to carry out this item.

Quality Control

The placing and tying of the Gabions shall be approved by the Engineer before filling commences.

Measurement Unit: No

The measurement shall be the number of Gabion boxes installed.

Payment

The unit rate shall be the full compensation for labour, materials, and any incidental item costs necessary to carry out the work.

08-80-003 : Rockfill to Gabions

The Contractor shall provide selected rock, crushed if necessary, and carry out the packing and compacting of the rock inside the Gabion boxes.

The boxes shall be filled in layers from the sides towards the middle in an interlocking stone matrix to prevent deformation and bulging. The interior and top layers of the boxes shall be hand packed with smaller stone to form a tightly compact structure and rammed in place. Care shall be taken to ensure that each layer of boxes is filled evenly and to a level surface before the next course of boxes is placed.

Work method

EE

The Contractor shall use **Labour** to carry out this activity.

Quality Control

The filling and compaction of the stones in the Gabion boxes shall be approved by the Engineer.

Measurement Unit m^3

Rockfill to Gabions shall be the volume of Gabions filled.

Payment

The unit rate shall be the full compensation for labour, tools, materials and incidental costs required for carrying out the work.

08- 80- 004 Drift Maintenance – desilting

This activity involves the removal of debris, silt and any vegetation from drifts and causeways. The debris shall be deposited away from the drift in approved spoil dumps.

This activity shall be carried before the rains, or as directed by the Engineer.

Work Method

The Contractor shall use **Labour** to carry out this item of work

Quality Control

The work shall be carried out to the satisfaction of the Engineer.

Measurement Unit: m^3

The measurement shall be the volume of debris or silt removed calculated as the product of length , width and measured depth of the affected section of drift.

Payment

The unit rate shall be full compensation for labour, tools, and incidental costs required to carry out the work.

08-80-005 Drift Repairs – Concrete

This activity involves the repair of concrete drifts, including the removal of loose or broken concrete, cutting back damaged areas to sound surfaces and repairing with concrete of similar Class to the original.

The drift shall be inspected and necessary repairs shall be instructed by the Engineer. Holes and voids shall be cleared of debris, loose material and dust, and shall be well

watered before the new concrete is placed. The new concrete shall be firmly rammed against the existing surfaces and finished flush with the surrounding materials. The surface of the repair shall be protected from direct sunlight and kept moist for 3 days. Concrete shall be Class 20/20 unless otherwise directed by the Engineer.

Quality Control

The work shall be carried out to the satisfaction of the Engineer.

Measurement Unit: m^3

The measurement shall be the volume of concrete used for the repair.

Payment:

The unit rate shall be the full compensation for labour, tools, materials and incidental costs required to carry out the work.

08- 80-006 Drifts (Stone Pitching)

08-80-007 Drifts (Concrete)

The Contractor shall construct Access drifts in grouted stone pitching and watercourse drifts in concrete at locations, and to the dimensions, shown on the Drawings or as directed by the Engineer. This shall include the provision of stone and the levelling of the areas to be covered.

The stone pitching for Access drifts shall comply with the requirement of 08–70-016 with the addition of masonry toes at each end of the drift as shown on the Drawings.

Concrete drifts shall be constructed in Class 20/20 concrete to the lines and dimensions shown on the Drawings or as directed by the Engineer.

The area to be covered shall be trimmed to the line and slope shown on the Drawings or as directed by the Engineer, and the prepared surface compacted with hand rammers or appropriate equipment. The concrete shall be poured in bays of half road width and of length 10-15 metres, between construction joints, with steel mesh reinforcement mats laid 50mm below the finished surface level. Contraction joints if required shall correspond with the construction joints where directed by the Engineer expansion joints shall be installed at positions and to the details given by the Engineer.

The grouted stone pitching and the concrete shall be covered with wet sacking or other approved cover for not less than 4 days after laying and shall not be subject to loading until adequate strength has been developed as instructed by the Engineer.

Work Method

The Contractor shall use **Labour** and appropriate **Equipment** to carry out this item.

Quality Control

i) Stone pitching quality shall be as for 08-70-016
ii) Concrete shall be checked by slump test to the standard as directed by the Engineer.

Measurement Unit m^3

The measurement shall be the volume of stone pitching or concrete laid, measured net according to the Drawings.

Payment

The unit rate shall be full compensation for labour, tools, materials, equipment and incidental costs required for carrying out the work.

08-80-008 At-level Scour Checks

The Contractor shall select and place flat stones of minimum dimensions 0.10-0.15m in gently sloping channels. The stones shall be placed in a manner to ensure minimum voids within the structure. A trench 0.2m deep by 0.2m wide shall be excavated in the invert of the channel and extended 0.2m into the slopes. Stones shall be laid up to the level of the invert with the middle section lower than the sides to form a spill way. The spacing of the checks shall be 1-4 metres, as directed by the Engineer.

Work Method

The Contractor shall use **Labour** to carry out this item.

Quality Control

The construction and spacing of the scour checks shall be checked by the Engineer.

Measurement Unit: No

The measurement shall be the number of scour checks constructed.

Payment

The unit rate shall be full compensation for labour, tools, materials and incidental costs required to carry out the work.

08-80-009/010 Gully-head Protection

08-80-009 Stone Chute Stabilisation
08-80-010 Stone and Post Chute Stabilisation

The Contractor shall construct gully-head protection works as directed by the Engineer to

the dimensions and details shown on the Drawings.

The dimensions of the stones shall not be less than 200mm and the volume not less than 0.01m^3 for the smaller stones and pebbles to be used as the transition layer between the stone structure and the ground. No rounded stones shall be used. Posts shall be durable hardwood minimum 900mm in length and 15mm diameter.

The gully head shall be excavated as shown on the Drawings to form a firm base for the stone layers. The initial layer shall be the small stones and gravel to a depth of 150mm after which the larger stone shall be carefully placed to form a compact matrix. Posts shall be driven a minimum of 600mm into the ground at a spacing as directed by the Engineer.

Work Method

The Contractor shall use **Labour** to carry out this item

Quality Control

The stone dimensions and construction shall be checked by the Engineer.

Measurement Unit: No

The measurement shall be number of units constructed

Payment

The unit rate shall be full compensation for labour, tools, materials and incidental costs required to carry out the work.

08-80-011/012 Check Dams

08-80-011 Stone Dams
08-80-012 Stone and Post Dams

The Contractor shall construct check dams in erosion gullies to the dimensions and details shown on the Drawings and as directed by the Engineer.

The dimensions of the stones in the main structure shall not be less than 200mm and the volume not less than 0.01 m^3 for the stones and pebbles for the transition layer between the stone structure and the ground. No rounded stones shall be used.

Posts shall be durable treated hardwood of minimum diameter 0.10m, of minimum length 1.6m, driven at least 600mm into the ground. Stones shall be carefully hand-packed to provide a stable structure with a minimum of voids.

The spacing of the check dams shall be as shown in the table below:

Check Dam Spacing					
Gradient	**Height of dam spill way (m)**				
%	**0.15**	**0.25**	**0.50**	**0.75**	**1.00**
5	15.0	25.0			
7	5.0	8.7	17.5	25	35
10	2.5	4.2	8.4	12.6	16.8
15	1.4	2.3	4.6	6.9	9.2
20	0.9	1.6	3.2	4.8	6.4
25		1.3	2.5	3.8	5.0
30		1.0	2.0	3.0	4.0
40			1.6	2.4	3.2
50			1.2	1.8	2.0

Work Method

The Contractor shall use **Labour** to carry out this item

Quality Control

The Engineer shall check the workmanship and spacing of the check dams.

Measurement Unit: No

The measurement shall be the number of check dams constructed

Payment

The unit rate shall be full compensation for labour, tools, materials and incidental costs required to carry out the work.

SECTION 10: GRADING AND GRAVELLING

Scope:

Grading covers the work of the reinstating of the road carriageway to the correct camber by removing the high points and filling gullies, corrugations, and wheel ruts to restore a smooth running surface. Gravelling consists of the excavation, loading, hauling, dumping and spreading of gravel wearing course material on the formation of the road carriageway. Gravel shall include lateritic gravel, quartzitic gravel, calcareous gravel, decomposed rock, soft stone coral rag, clayey sand and crushed rock.

The material may be obtained from quarries, borrow pits or excavation in cuttings as directed by the Engineer. Gravel material shall conform to the requirement given in Table 10.1

Table 10.1: Requirement for Gravel Wearing Course

GRADING REQUIREMENTS	
Sieve (mm)	% by Weight Passing
40	100
28	95 - 100
20	85 - 100
14	65 - 100
10	55 - 100
5	35 - 92
2	23 - 77
1	18 - 62
0.425	14 - 50
0.075	10 - 40

For “Quarry Waste” gravel stones of maximum dimension 80mm may be permitted

PLASTICITY INDEX REQUIREMENTS PI		
Zone	Min	Max
WET: Mean annual rainfall > 500mm	5	20
DRY: Mean annual rainfall	10	30

BEARING STRENGTH		
Traffic VPD	CBR	DCP Equivale mm/Blow
>15	20	11
<15	15	14
CBR at 95 % MDD, Modified AASHTO and 4 days soaking		
Lower quality material (CBR 15) may be accepted if no better material can be found		

The Engineer shall approve quarries and the extent of their exploitation. The quarries shall be shown to the Contractor prior to commencement of the Works. The Contractor shall be responsible for the acquisition of the quarry rights and shall conduct respective negotiations

with landowners and affected communities.

Alternative sources of gravel material whose quality can be shown to be in compliance with the specification requirements may be used, with the approval of the Engineer and at no extra cost to the Employer. The Contractor is deemed to have included in his rates for the provision of the gravel material.

10-50-002 Carriageway Grading – Heavy Grading

The Contractor shall scarify the existing carriageway surface, cutting high spots and moving materials to fill potholes, corrugations and wheel ruts and reshape the surface to the specified camber, using a Motor grader unless otherwise directed by the Engineer. All loose rocks, roots and grasses shall be removed and disposed of well clear of the drains.

Pegs 300 to 400mm long shall be placed at 20 m intervals to mark edge of the carriageway.

The material shall be bladed toward the centre of the road starting from both edges until the specified camber is achieved. Suitable material from the side drains may be used as additional material. Any further material needed to achieve the correct camber shall be from an approved source. Compaction shall be carried out using appropriate equipment approved by the Engineer, from the carriageway edges to the centerline in overlapping passes.

No grading shall be carried out in dry conditions. Where additional moisture is required to achieve compaction it shall be added in an even manner without transverse or longitudinal flow.

Work Method

The Contractor shall use **Equipment** to carry out this item.

Quality Control

- The width of the carriageway shall be checked at every 50m intervals and have a tolerance of + 50mm or .20mm.
- The camber shall be checked with a camber board at 25m intervals and shall have a tolerance of +/- 1%

Measurement Unit: m^2

The measurement shall be the area of carriageway graded, measured net according to the specified width and measured length graded.

Payment

The unit rate shall be the full compensation for labour, tools, equipment and incidental costs

required for carrying out the work.

10-50- 004 : Carriageway Grading - Light Grading

The Contractor shall grade the carriageway to control roughness and corrugations using either a Towed or a Motor grader. The width of the carriageway shall be as specified for the Road Class.

Pegs 200 to 300mm long shall be placed at 20 m intervals to mark edge of the carriageway

The material shall be bladed toward the centre of the road, starting from both edges, to the specified camber. Where instructed by the Engineer, suitable materials from the side drains may be used to fill potholes and gullies in the carriageway. Any further material needed to re-form the camber shall be from an approved source. Compaction shall be achieved using the wheels of the equipment, tracked evenly over the full surface, or by other approved means. No grading shall be carried out in dry conditions.

Work Method

The Contractor shall use **Equipment** to carry out this item.

Quality Control

- The width of the carriageway shall be checked at every 50m intervals and have a tolerance of +50mm or -20mm
- The camber shall be checked with a camber board at 25m intervals and shall have a tolerance of +/- 1%

Measurement Unit: m^2

The measurement shall be the area of carriageway graded, measured net according to the specified width and measured length graded.

Payment

The unit rate shall be the full compensation for labour, tools, equipment and incidental costs required for carrying out the work.

10-80- 004 Removal of Overburden - Labour
10-80- 009 - Equipment

The Contractor shall remove overburden from quarries and borrow pits, which includes loading, hauling and stockpiling at approved locations. The thickness of the overburden layer to be removed shall be determined from trial pits dug on a 30 metre grid within the

quarry area.

The overburden shall be deposited neatly for re-use to reinstate the quarry on completion of the Works, as directed by the Engineer.

Work Method:

The Contractor shall use **Labour** and appropriate **Equipment** to carry out this item .

Quality Control

- The location and manner of stock piling of the overburden for the reinstatement of the quarry shall be to the approval of the Engineer.

Measurement Unit: m^3

The measurement shall be the volume of overburden removed as calculated from the cleared area and the mean depth indicated from the trial pits.

Payment

The unit rate shall include full compensation for labour, tools materials and equipment, haulage, stockpiling and incidental costs required for carrying out the work.

10–80- 005 : Haulage (Overhaul beyond 1.5km)

The Contractor shall load the excavated gravel, haul by appropriate equipment and off-load on the road as directed by the Engineer. Where the quantity delivered in any load falls short of the equipment capacity, off-loading shall only be permitted after the agreed spacing is adjusted accordingly.

No vehicle with a capacity of greater than 10 tonnes shall be permitted to off-load gravel directly on the prepared formation. Any greater loads shall be dumped in stockpiles off-road and transported to the formation areas by appropriate means.

Where loads supplied are found to contain material other than from the approved quarry and are of unacceptable quality, the Contractor shall remove them from site at the Contractor's expense.
Work Method:

The Contractor shall use both **Labour** and **Equipment** to carry out this Item.

Quality Control:

- No haulage equipment shall be used until its capacity has been ascertained by the Engineer
- The quality of gravel dumped on the road shall be according to the Specifications

- The quantity of material delivered in each load shall be checked before dumping is allowed
- The distance between the stacks shall be checked to ensure the required compacted thickness will be achieved.

Measurement Unit: m^3km (Overhaul)

The Contractor shall allow in the rates for item 10-80-007 for a 'free' haul distance of 1.5km. The 'overhaul' shall be the distance, greater than 1.5km, to the centre point of the section where the gravel is being dumped and processed, measured along the shortest route as determined by the Engineer.

The measurement of overhaul shall be the product of the volume of the gravel hauled and the distance to the centre point as indicated above.

Payment

The unit rate shall include full compensation for labour, tools, equipment, and incidental costs necessary to carry out the work.

Excavation, Free haul, Spreading and Compaction of Gravel

10-80-007 - Labour
10-80-008 - Equipment

Excavation of Gravel - Labour
- Equipment

Gravel shall be excavated from quarries approved by the Engineer, and the Contractor shall inform the Engineer if the quality/availability of the gravel changes during the course of excavation. Excavation and loading shall normally be by labour unless, at the request of the Contractor, the Engineer allows the use of equipment.

Stones and boulders with one dimension greater than 80mm shall be removed from the excavated gravel and deposited outside the quarry at locations approved by the Engineer. Such stones and boulders may be reused in other parts of Works with the approval of the Engineer.

Work Method

The Contractor shall use **Labour** and/or **Equipment** to carry out this work, as directed by the Engineer.

Quality Control:

- Oversize stones and boulders shall not be loaded for haulage to the road.
- Areas containing deleterious material shall not be excavated.

Free haul, spreading and Compaction of Gravel

The Contractor shall spread and compact gravel material, in a manner to ensure a uniform thickness of the layer across the full width of the carriageway and shaped to the specified camber. Spreading also includes the removal of any oversized stones or boulders, which cannot be broken down to the required size, to spoil dumps. Gravel shall be spread within 24 hours of off-loading.

Compaction of the gravel material shall be carried out from the carriageway edges to the centerline by overlapping passes of the compaction equipment. The number of passes shall be as directed by the Engineer dependent upon the equipment used and the material being compacted. Unless otherwise instructed the moisture content of the material shall be within $\pm$ 2% of optimum

Where additional moisture is required water shall be applied in an even manner and the rate of application shall be such that no transverse or longitudinal flows occur.

The Engineer may instruct the Contractor to carry out density tests on the compacted material to ensure that an acceptable standard has been achieved.

Work Method:

The Contractor shall use **Labour** and/or appropriate **Equipment** to carry out this item.

Quality Control:

- The gravel surface width shall be checked at 100m intervals and shall have a tolerance of
  + / - 50mm
- Trial holes shall be dug as directed by the Engineer to check the gravel thickness and shall have a tolerance of + 5mm / - 0mm
- The camber shall be checked at 50m intervals and the maximum tolerance shall be + / - 1 %
- The longitudinal profile shall be checked after the compaction of each load to ensure a smooth surface with no corrugations or depressions

Measurement Unit: m^3

The measurement shall be the volume of compacted gravel surfacing measured net according to the Drawings and shall include the excavation and the 1.5km ‘free’ haul distance

Payment

The unit rate shall be the full compensation for labour, tools, equipment and incidental costs required for carrying out the work.

10-80-010 Restoration of Quarries and Borrow Pits

The Contractor shall level the ground, return the topsoil from the stockpiles, and uniformly spread the material over the full excavation area.

Adequate drainage provisions shall be made to protect the excavation areas, and where necessary appropriate protection measures shall be taken to avoid erosion of the spread topsoil layer. Grass and trees shall be replanted as directed by the Engineer.

Work Method

The Contractor shall use **Labour** and/or **Equipment** to carry out this item as agreed by the Engineer.

Quality Control

The Engineer shall check that the required measures have been satisfactorily taken.

Measurement and Payment: Provisional Sum

Payment shall be made on a Dayworks basis for the labour and equipment as directed by the Engineer

SECTION 12: NATURAL MATERIAL BASES

12-50-001 Hand Packed Stone Paving

The Contractor shall construct the hand packed stone paving on the shaped and compacted road formation which has been approved by the Engineer.

Pegs shall be placed at 5 metre centres at the edge of the carriageway with the tops of the pegs at the desired finished road level.

A kerb of larger stones (30-40 cms) shall be placed in an edge trench so that the tops of the stones correspond to the finished road surface level. The trench shall be backfilled and compacted to secure the kerb stones in place. Stones 15-20 cms maximum dimension shall be placed tightly together on the road formation between the kerbs with the greater dimension vertical, and the tops approximately at the finished surface level.

The gaps between the base stones shall then be filled with smaller stones and hammered into place. Angular chippings from the breaking of larger stones, and other smaller stones shall be wedged into the gaps to form a close matrix.

The surface shall then be blinded to finished road profile level with gravel, fine stones, sand or clay sand mix, and compacted until no movement is observed.

Work Method

The Contractor shall use **Labour** and **Equipment** to carry out this item

Quality Control

The passage of the compaction equipment shall show no movement within the paving. The finished surface shall be dense and firm.

Measurement Unit: m^3

The measurement shall be the volume of paving in place measured net according to the Drawings.

Payment

The unit rate shall include full compensation for labour, tools, material, equipment and incidental costs necessary to carry out the work

SECTION 15: BITUMINOUS SURFACE TREATMENTS

Scope

This section covers a range of bituminous surface treatments including surface dressing, slurry seal, otta seal and cold asphalt.

Aggregate Gradings

The following are the aggregate grading requirements for the bituminous surface treatments.

- **Surface Dressing (Single or Double Seal)**

Sieve Size (mm)	**Nominal Size (mm) (% passing of mass)**				
	19.0	16.0	13.2	9.5	6.7
26.5	100				
19.0	85-100	100	100		
16.0	-	85-100			
13.2	0-30	0-30	85-100	100	
9.5	0-5	0-5	0-30	85-100	100
6.7			0-5	0-30	85-100
4.75				0-5	0-30
3.35					0-5

- **Slurry Seal**

Sieve Size (mm)	**% Passing by mass**		
	Fine	**Medium**	**Coarse**
9.5			100
6.7		100	-
4.75		85-100	70-90
2.36	100	65-90	45-70
1.18	65-90	45-70	28-50
0.60	40-60	30-50	19-34
0.30	25-42	18-30	15-25
0.15	15-30	10-21	7-18
0.075	10-20	5-15	5-15

- **Otta Seals**

Sieve Size (mm)	**% Passing by mass**		
	Coarse	**Fine**	**Wide**
19	100	100	100

16	85-100	85-100	85-100
13.2	60-80	80-100	60-100
9.5	36-56	56-96	36-96
6.7	20-40	40-80	20-80
4.75	10-30	30-70	10-70
2.36	2-16	16-50	2-50
1.18	0-10	10-38	0-38
0.425	0-5	5-25	0-25
0.075	0-2	2-10	0-10

Coarse grading < 100 vpd
Fine grading >100 vpd

Mixing Requirements

The following are the mixing proportions required for bituminous surfacing materials

- Slurry Seal

Nominal Rate of Application m^3/m^2	**Materials required**		**Cement $m^3/100m^2$**	**Graded Stone Crusher Dust $m^3/100m^2$**
	Water litres/$100m^2$	**Emulsion litres/$100m^2$**		
0.006	96	138	0.006	0.60
0.008	128	184	0.008	0.80
0.020	320	460	0.020	2.00

Cold Asphalt

80 litres 6.3 mm stone
30 litres Crusher Dust
10 litres Cationic grade Emulsion
3 litres Water

Application Rates

The following are the application rates for seals and aggregates for bituminous surfacing materials.

Surface Dressing

(i) Emulsion Seals

Application	Single Seal litres/m^2	Double Seal Litres/m^2
Prime	0.85-1.10	0.80-1.10
Tack Coat	-	0.75-1.30
Seal Coat	1.30-1.70	1.75-1.95

(ii) Chipping Spread Rates

Size (mm)	m^2/m^3
6	130-170
10	100-130
14	80-110
20	60-85

(iii) Slurry Seals

Surfacing Type	Nominal Size of Aggregate (mm)	Nominal Rate of Application m^3/m^2
Cape Seal	13.2 19.0	0.006 0.008
Slurry	Thin (6mm) Thick (15mm)	0.008 0.020

15-70-008 Slurry Seal

The Contractor shall carry out slurry seal surfacing on the prepared roadbase only after the approval of the Engineer of the proposed working method.

The roadbase shall be free of dust and loose material and the Contractor shall lightly dampen the surface before the application of the prime coat.

The prime coat shall be sprayed with a hand lance, or other approved means on designated and marked areas to ensure the correct spray application rate is achieved. The prime shall be applied with a constant spray action, which avoids bare patches, in a longitudinal and transverse movement. The prime coat shall be left for a minimum of 24 hours before the application of the slurry seal.

The slurry seal shall be mixed in a mechanical concrete mixer by first adding 75% of the required volume of water. Crusher dust and cement shall then be added slowly and mixed

to a uniform consistency. The remaining 25% of the water shall then be added.

The bitumen emulsion shall be added and mixed until a creamy workable consistency is obtained. The slurry shall then be transported in wheelbarrows, laid in designated and marked areas, and spread to an even thickness with rubber squeegees.

Before a second seal layer is laid, the first layer shall be opened to traffic for a period specified by the Engineer. The second seal shall be laid in a similar manner to the first.

Work Method

The Contractor shall use **Labour** and **Equipment** to carry out this item.

Quality Control

The Engineer shall check the application rate of the slurry seal and the consistency of the surface finish.

Measurement Unit: m^2

The measurement shall be the area of seal measured net according to the Drawings.

Payment

The unit rate shall be the full compensation for labour, tools, equipment, materials and incidental cost necessary to carry out the work.

15-70-010 Surface Dressing - Single Seal
15-70-011 - Double Seal

The Contractor shall carry out the surface dressing on the prepared roadbase only after approval of the Engineer of the proposed working method.

The roadbase shall be free of dust and loose material and the Contractor shall lightly dampen the surface before the application of the prime coat.

The prime coat shall be sprayed with a hand lance, or other approved means, on designated and marked areas to ensure the correct spray application rate is achieved. The prime shall be applied with a constant spray action, which avoids bare patches, in longitudinal and transverse movements.

The prime coat shall be left for a minimum of 24 hours before any seal coat is applied.

With the approval of the Engineer, the Contractor shall apply the seal coat at the specified temperature and spray application rate, using a hand lance or other approved means.

On achieving the application rate on the designated areas an even layer of clean stone chippings shall be spread with shovels, at the specified application rate, to obtain a uniform coverage without an excess of chippings.

Areas of completed seal shall be rolled, before the bitumen has hardened, with a dead weight steel or pneumatic roller which does not cause any crushing of the chippings.

After 24 hours the sealed surface shall be swept clean of excess chippings and slow moving traffic shall be permitted on the surface. If required, a second seal shall be applied in the same manner, as directed by the Engineer.

Work Method

The Contractor shall use **Labour** and **Equipment** to carry out this item.

Quality Control

The Engineer shall check the specified application rates of the bitumen and chippings, and the consistency of the coverage.

Measurement Unit: m^2

The measurement shall be the area of seal measured net according to the Drawings

Payment

The unit rate shall be the full compensation for labour, tools, equipment, materials and incidental costs necessary to carry out the Works.

15-70-012 Cold Asphalt

Cold asphalt may be used for bitumen surfacing repairs and areas of new surfacing where directed by the Engineer. The areas shall be prepared and primed as instructed by the Engineer before the application of the cold asphalt.

Asphalt may be mixed by hand on a clean concrete surface with the mixing piles placed in a circle around a central area which will be used to stockpile the mixed asphalt, or alternatively in a concrete mixer.

Piles of stone and crusher dust shall be in proportion to the mixing requirement specified above.

The cationic emulsion shall be carefully poured on to the mixing piles in a manner to ensure no run-off and the materials shall be thoroughly mixed with shovels to a uniform consistency. The mix shall then be formed into a central stockpile and shall be used as directed by the Engineer with 2 weeks of mixing.

The asphalt may alternatively be mixed in a concrete mixer following the same mixing procedure.

The asphalt shall be transported to the work site in wheelbarrows, laid and spread to form an even, uniformly thick, surface as directed by the Engineer. The surface shall be rolled with a dead, weight roller such that the asphalt does not flow under the drums.

The surface may be open to traffic immediately after rolling.

Work Method

The Contractor shall use **Labour** and **Equipment** to carry out this item.

Quality Control

The Engineer shall check the asphalt consistently and the thickness of the laid surfacing.

Measurement Unit: m^2

The measurement shall be the area of asphalt measured net according to the Drawings.

Payment

The unit rate shall be the full compensation for labour, tools, material, equipment and incidental costs necessary to carry out the work.

15-70-013 Otta Seal - Single
15-70-014 - Double

The application of the Otta Seal shall follow the requirements for Surface Dressing in 15-004. The Contractor shall first lay a trial section under the direction of the Engineer, to ascertain the optimum binder application rate for the site conditions, and the grading of the aggregates.

After the first seal has been laid to the satisfaction of the Engineer, the Contractor shall apply extensive rolling with a pneumatic roller for 3 days, or as directed by the Engineer, in

addition to allowing slow moving traffic to pass.

Over a further 10-12 days the Contractor shall ensure that any loosened aggregate is swept back into the wheelpaths of traffic for re-compaction into the surface.

Work Method

The Contractor shall use **Labour** and **Equipment** to carry out this item.

Quality Control

The Engineer shall specify binder application rates and aggregate grading and check compliance.

Measurement Unit:

The measurement shall be the area of seal measured net according to the Drawings.

Payment

The unit rate shall be the full compensation for labour, tools, materials, equipment and incidental costs necessary to carry out this work.

SECTION 17: Concrete Works

17-40-001 Concrete Road Section

The Contractor shall construct the concrete road carriageway on the prepared, shaped and compacted road formation as approved by the Engineer.

Concrete shall be class 20/20 and may be batched by volume, but shall be mixed in a mechanical mixer. The mix shall be as shown below.

Concrete Class	**Nominal Mix by Volume**	**Batch with 1 bag Cement**		
		No. of boxes		
		Fine	**Coarse**	**Yield (approx)**
20/20	1:2:4 (20mm max aggregate)	2	4	0.16m^3

The water added shall be the minimum necessary to give sufficient workability for efficient consolidation of the concrete. For concrete placed by hand this shall be 23-27 litres per bag of cement. For mechanical mixing and compacting (poker vibrator) the water content shall be reduced to 20 litres per bag of cement.

The concrete shall be placed in formwork which is clean, smooth faced and secure from movement and leakage to the full depth of the carriageway (150mm) in clearly marked out bays. Steel reinforcing mesh mats (6mm) shall be laid at a depth 50mm below the finished surface as the concrete is being poured. Compaction of the concrete shall be by hand ramming or poker vibrator. The surface shall be tamped with a timber tamping bar to produce a uniform, transverse ridged surface.

Concrete pours shall normally be over half the carriageway width and in lengths between construction joints as directed by the Engineer, of 10-15 metres. Contraction joints if required shall correspond with the construction joints.

Where directed by the Engineer expansion joints shall be formed in positions and in accordance with the details provided by the Engineer.

The surface of the concrete shall be covered and kept moist for at least 4 days to allow adequate curing.

The Contractor shall make cubes for testing as directed by the Engineer.

All materials used for concrete production and the Contractor's working method shall be approved by the Engineer before concreting is permitted.

Work Method

The Contractor shall use **Labour** and **Equipment** to carry out this item.

Quality Control

Slump test shall be to the standard specified by the Engineer in the range of 25-100mm. Cube strength shall be 27.5 N/mm^2 at 28 days on an average of 4 cubes

Measurement Unit: m^3

The measurement shall be the volume of concrete measured net according to the Drawings

Payment

The unit rate shall include full compensation for labour, tools, equipment, materials and incidental costs necessary to carry out the work.

SECTION 20: ROAD FURNITURE

Scope:

This section comprises those items of Road Furniture to be erected and maintained as aids to road safety, including traffic signs and guardrails.

20-50- 001 Traffic Sign Maintenance

This activity involves all the tasks required to ensure that the road signs and signposts are in a clean, properly aligned, vertical and secure condition; the replacement of missing or broken bolts, nuts or other fixings and the tightening of the same. The maintenance shall also extend to securing any loose posts by the re-compacting or removal of any unsuitable material surrounding the posts, importing and compacting of suitable material to render the post secure.

Work Method

The Contractor shall use **Labour** to carry out this item.

Quality Control

- The signs shall be clean and in vertical position
- The fixings shall be hand checked to be tight

Measurement Unit: No.

The measurement shall be number of signs maintained.

Payment

The unit rate shall be the full compensation for labour, tools, material and incidental costs required to carry out the work.

20-50-002 Traffic Signs

The Contractor shall erect traffic signs of the type and at locations as directed by the Engineer. The signs materials and quality are shown on the Drawings. The signs shall be bedded in concrete Class 15/20 and shall be supported vertically until the concrete is set.

Work Method.

The Contractor shall use **Labour** to carry out this item

Quality Control.

The Engineer shall check the sign position before concrete is backfilled.

Measurement Unit: No

The measurement shall be the number of signs erected.

Payment

The unit rate shall be the full compensation for labour, tools, materials and incidental costs required for carrying out the work.

20-70- 001: Guardrail Repair

This activity involves the repair of Guardrails (including rails, posts and fixings) to a properly aligned, vertical and secure condition. The repair shall include securing any loose posts by re-compaction or removal of any unsuitable material surrounding the post, importing and compaction of suitable materials to render the posts secure, and the re-fixing of the rails.

Work Method

The Contractor shall use **Labour** to carry out this item.

Quality Control

- The guardrails shall be checked as being properly aligned secure and in a vertical position
- The fixings shall be hand checked to be firmly fixed

Measurement Unit: m

The measurement shall be the length of Guardrail repaired
Payment

The unit rate shall be the full compensation for labour, material, tools, and incidental costs required to carry out the work.

20- 50- 004: Marker Posts Replacement

This activity involves the replacement of kilometre stones and culvert marker posts

The Engineer shall determine the location of the marker stones and posts. They shall be set in a simple excavation and backfilled with soil. The depth of the excavation shall be determined on the site, depending on the size and shape of the marker stone or post.

Work Method

The Contractor shall use **Labour** to carry out this item.

Quality Control

- The posts shall be vertical and firmly bedded to the approval of the Engineer

Measurement Unit: No

The measurement shall be in number of marker posts.

Payment

The unit rate shall be the full compensation for labour, tools, posts, materials and incidental costs required to carry out the work.

20-70-003. Guard Rails

The Contractor shall erect guardrails at locations shown on the Drawings or as directed by the Engineer. The guardrails shall comply with the requirements of the Road Authority and shall be erected on timber posts of top diameter not less than 150mm.

Posts shall be drilled and shaped as shown on the Drawings and provided with the necessary bolts, nuts, washers and spacer blocks.

Holes excavated for the timber posts shall be spaced to suit the standard length of guardrail supplied, and shall be of sufficient size to permit the proper setting of the posts and to allow room for backfilling and compacting. At least 1 metre of a post shall be embedded in the ground. The backfilling shall be with 12:1 soil cement mixture, or as otherwise directed by the Engineer, after the erected rails have been approved by the Engineer.

Work Method

The Contractor shall use **Labour** to carry out this item.

Quality Control.

The Engineer shall check the post and rail erection before final backfilling.

Measurement Unit: m

The measurement shall be the length of Guardrail erected.

Payment

The unit rate shall be the full compensation for labour, tools, materials and incidental costs required for carrying out the work.

SECTION 22: DAYWORKS

A Provisional Sum shall be included in the Bills of Quantities to cover the payment of equipment, labour and materials for work instructed by the Engineer on a Dayworks basis.

The Contractor shall include prices for all items in the Schedule of Rates, in the Dayworks Bill, and shall carry out work using these rates only if directed by the Engineer.

Measurement and Payment

a. Equipment:

Payment for equipment shall only be made for the time each item of equipment is working. Idle time due to breakdown or incompleteness of the equipment shall not be paid. The rate of equipment shall include for the cost of the following:-

i. Transport of the equipment to the site
ii. Operators , drivers and assistants including their overtime
iii. Fuels and lubricants
iv. Maintenance, spare parts and all costs of repairs
v. Depreciation, insurance, overheads and profits.

b. Labour

Payment shall only be made for the time each of worker working on the Dayworks as instructed by the Engineer. The rate for labour shall include the cost of,

i. All wages, allowances and other payments due to the worker
ii. Provision of small tools used on Dayworks activities by labourers and tradesmen.
iii. Insurance, overheads and profit.

c. Materials

Payment shall only be made for materials instructed by the Engineer for use in Dayworks activities. The rate for materials shall include for the cost of provision of the material, transport to site, storage, handling, overheads and profits.

Schedule of Dayworks

The Engineer shall compile a Schedule of the Equipment, Labour and Materials which may apply to Dayworks activities, to be included in the Dayworks Bill.

SECTION 25: HIV/AIDS AWARENESS AND PREVENTION CAMPAIGN

Scope:

This section sets out the Contractors obligations with regard to on-site HIV / AIDS awareness campaign and preventive measures that are to be instituted.

25-50-001 HIV / AIDS Awareness Campaign

The Contractor shall institute an HIV / AIDS awareness campaign amongst his workers for the duration of the Contract.

The Contractor shall display AIDS awareness posters in all buildings frequented by workers employed on the Contract, where such buildings fall under the control of the Contractor.

In addition at least two of the Contractors vehicles regularly used on site shall display HIV / AIDS awareness posters. The posters shall be printed on gloss paper and shall be at least A1 size on buildings and A3 size or other approved size on vehicles. The message on the posters shall be supplied by the Employer through the Engineer.

Aids awareness shall also be included in the orientation process of all workers employed on the Contract.

Measurement Unit: month

The measurement shall be the calendar month or part thereof, measured over the duration of the campaign.

Payment:

The rate shall include full compensation for equipment; labour and material required for the provision of the item.

25-50-002 AIDS Prevention Campaign

The Contractor shall institute an HIV / AIDS prevention campaign amongst his workers for the duration of the Contract.

As part of the campaign the Contractor will be required to make condoms available to his workers. The condoms shall be supplied by the Employer through the Engineer.

Measurement Unit: month

The measurement shall be the calendar month, measured over the duration of the campaign.

Payment

The rate shall include full compensation for equipment, labour and material, including the distribution of condoms, required for the provision of the item.

25-50-003 HIV/AIDS and Cross-cutting Issues

The Contractor shall arrange and conduct meetings and/or training sessions for workers and staff on HIV/AIDS and other cross-cutting issues at times and locations directed by the Engineer.

Measurement

A Provisional Sum shall be included in the Bill of Quantities for this item.

DRAWINGS

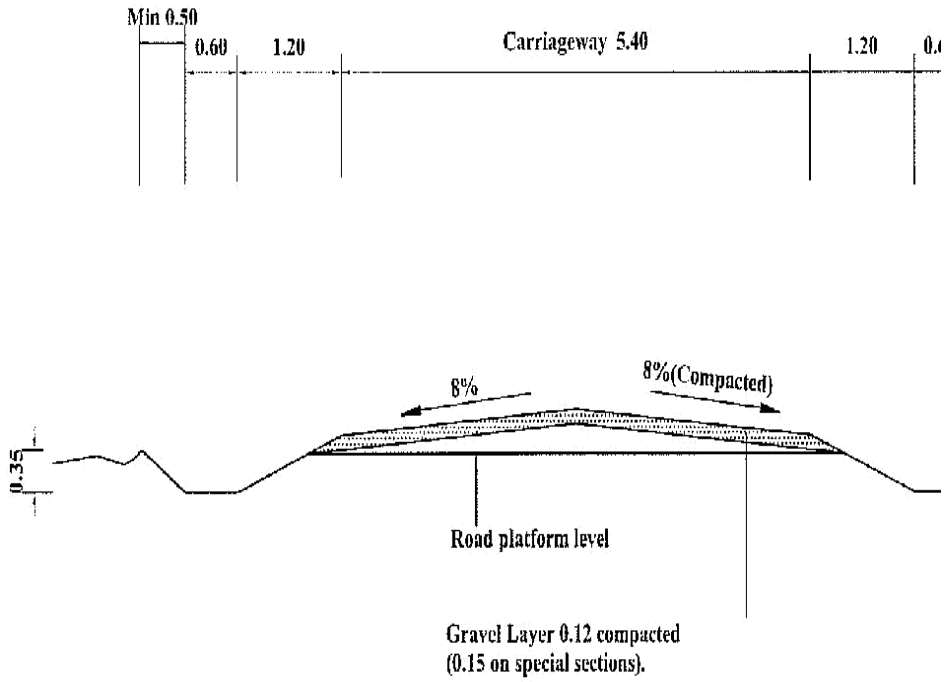

Notes:

1.All dimensions in metres

2.Traffic levels of > 200vpd may justify a carriageway width of 6.0m

3.Gravel thickness may be increased as directed by the Engineer

C-1

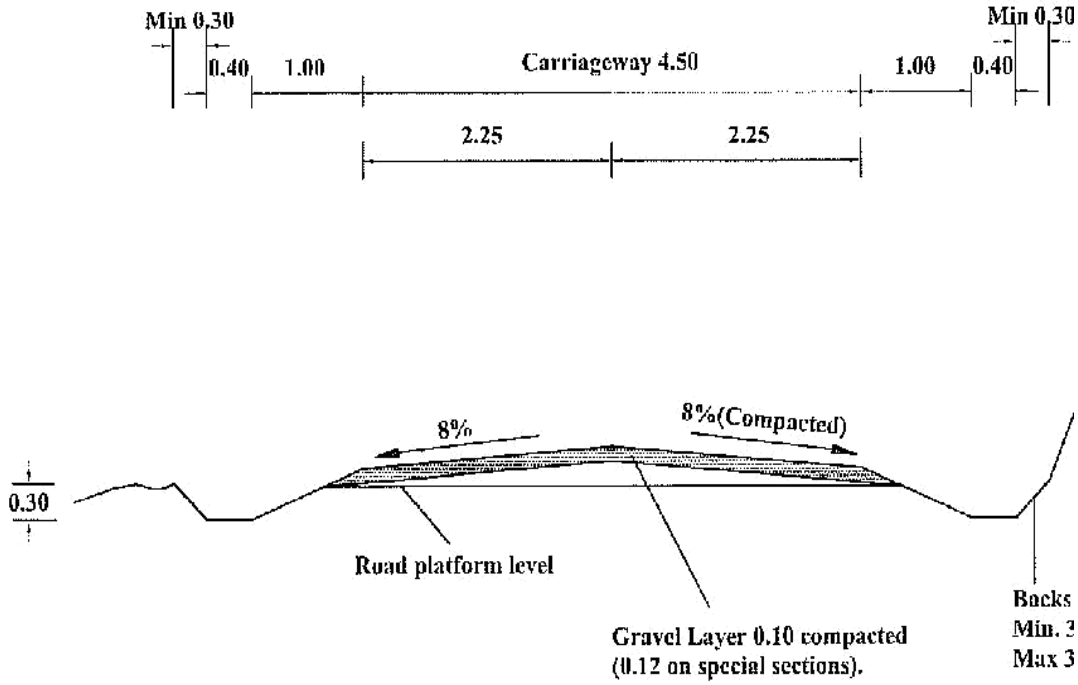

Notes:
1.All dimensions in metres
2.Gravel thickness may be increased as directed by the Engineer

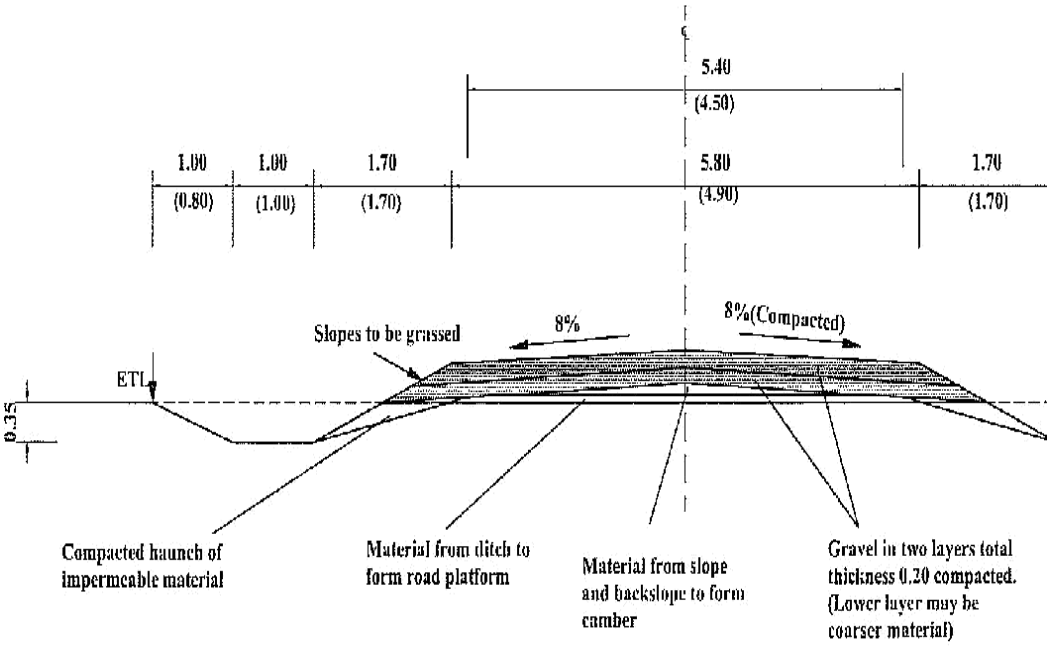
5.40
(4.50)
1.00
(0.80)
1.00
(1.00)
1.70
(1.70)
5.80
(4.90)
1.70
(1.70)
Slopes to be grassed
8%
8%(Compacted)
ETL
0.35
Compacted haunch of impermeable material
Material from ditch to form road platform
Material from slope and backslope to form camber
Gravel in two layers total thickness 0.20 compacted. (Lower layer may be coarser material)

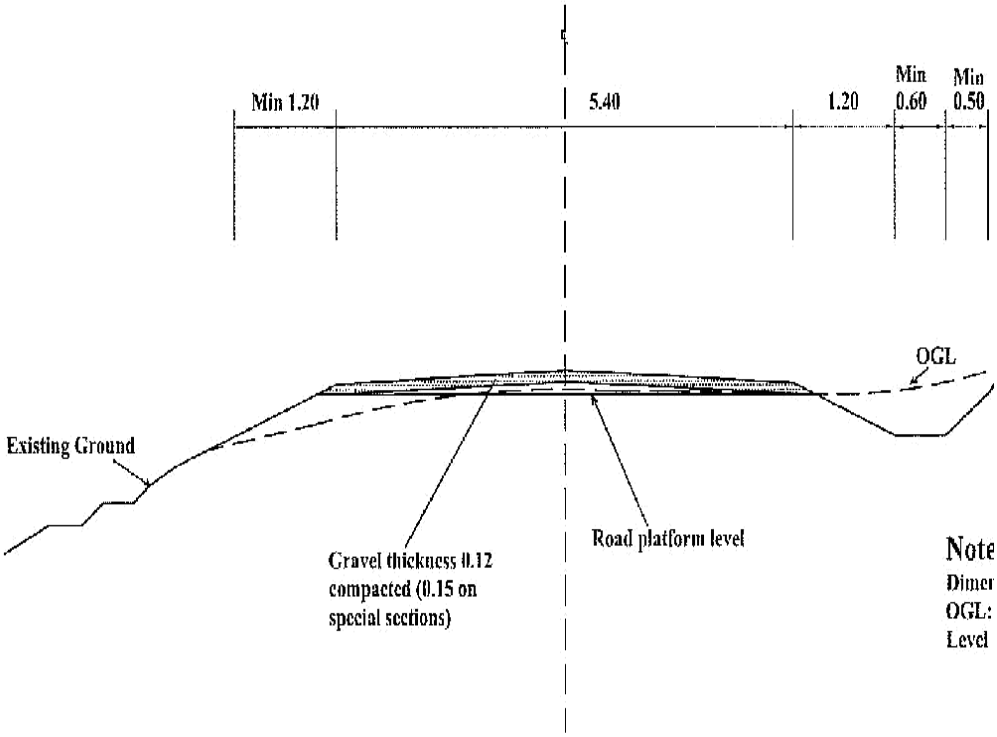
Min 1.20
5.40
1.20
Min
0.60
Min
0.50
OGL
Existing Ground
Gravel thickness 0.12
compacted (0.15 on
special sections)
Road platform level
Note
Dimer
OGL:
Level

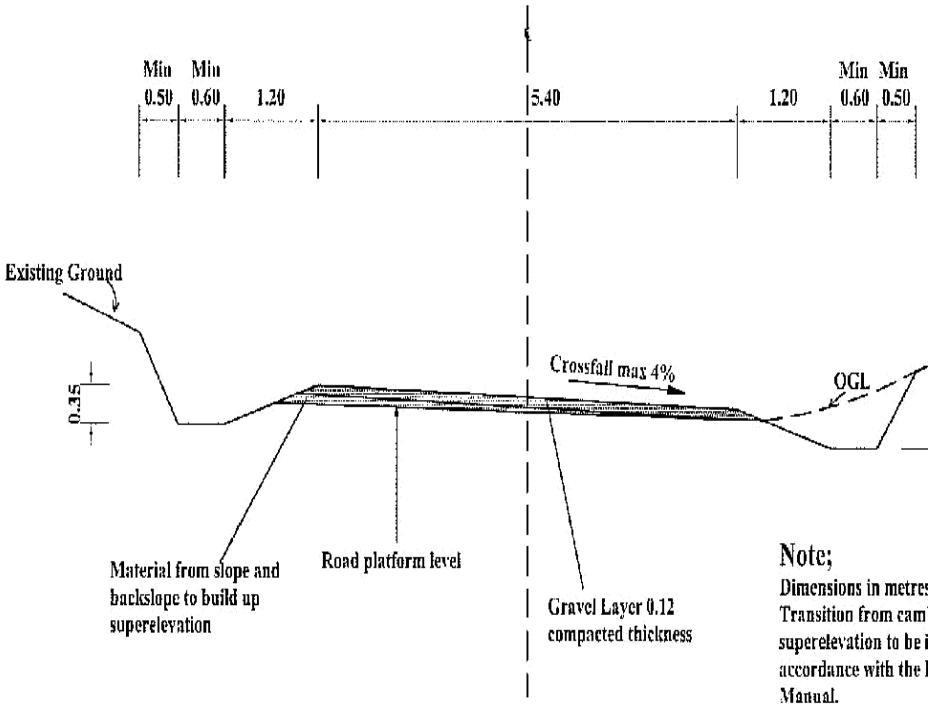

Note;
Dimensions in metres
Transition from cam
superelevation to be i
accordance with the l
Manual.
OGL Original Groun

S-2

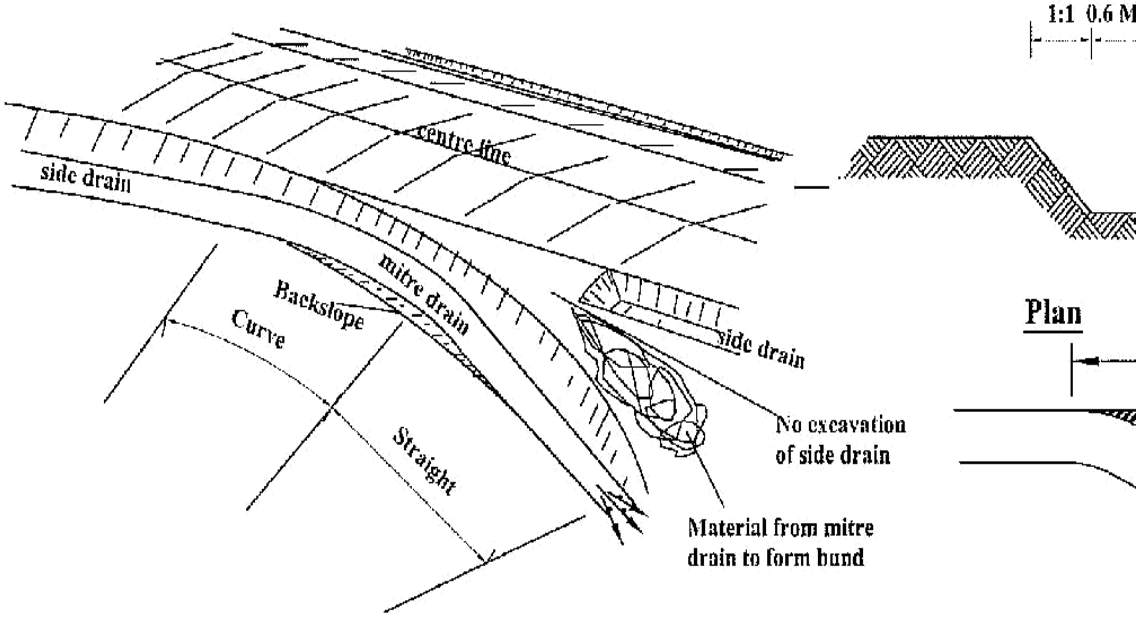

Mitre dr
Cross Se

1:1 0.6 M

Plan

Notes

Location,direction and length of th
by the Engineer

Scour checks made of wooden stakes

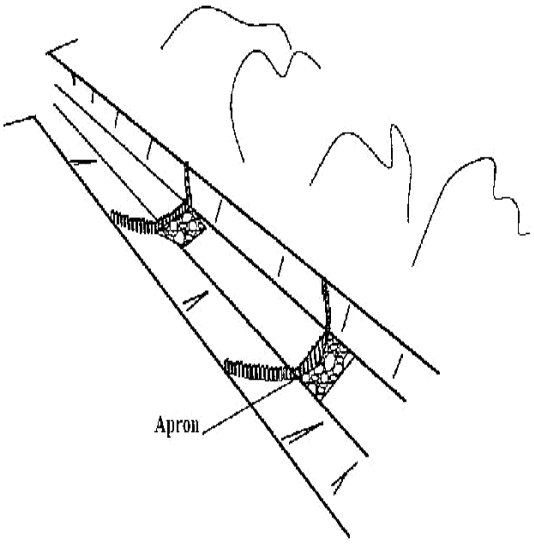

Scour checks made of stones

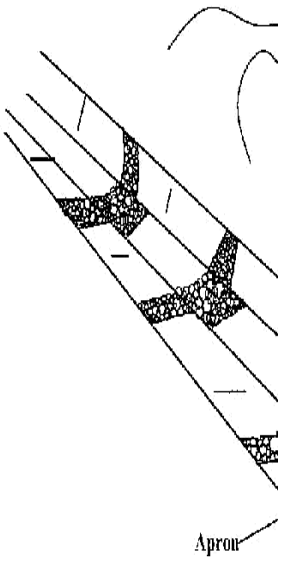

C-7

Scour checks made of stones

Cross section

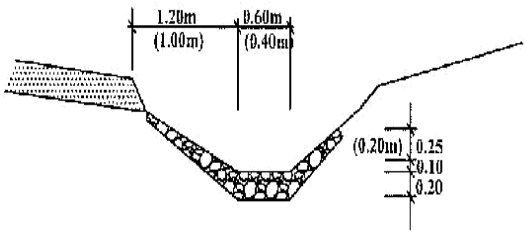

Ground plan

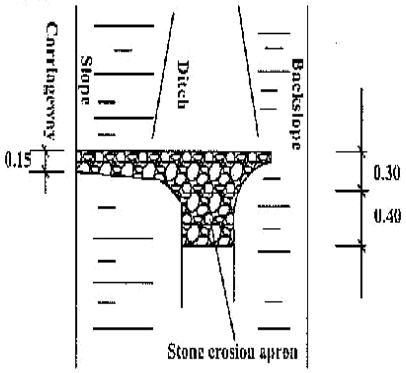

NOTE
1.Dimensions in metres

Scour checks mac

Cross section

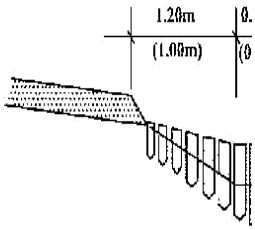

Ground plan

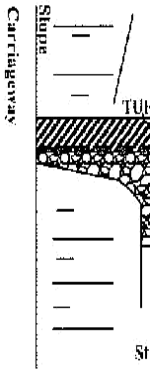

STONE WEIGHT:MIN 10KG
STAKE DIAMETER: MIN. 0.1(

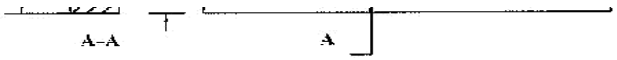

Note
1.Dimensions in mm

SECTION OF MASONRY SCOUR CHECK

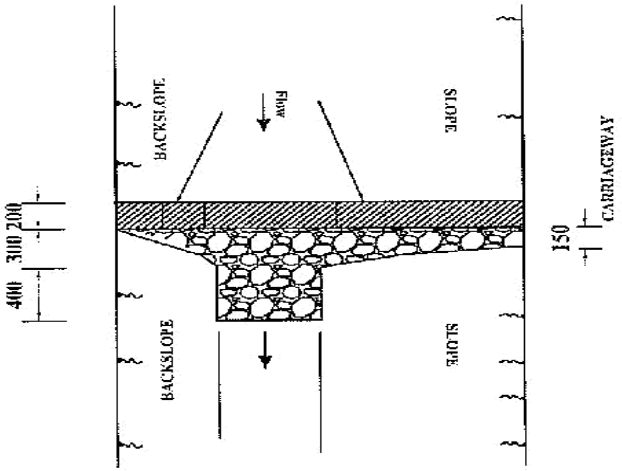

PLAN OF DRAIN WITH SCOUR CHECK

Cross-Section	Sizes in mm			Excav (m3)	Concrete (m3)	Apron stone pitching (m3)
	Length	Width	Depth			
A	2400	200	550	0.22	0.28	0.18
B	2000	200	500	0.18	0.2	0.14

SECTION OF CONCRETE SCOUR CHECK

NOTE
1.Dimensions in mm

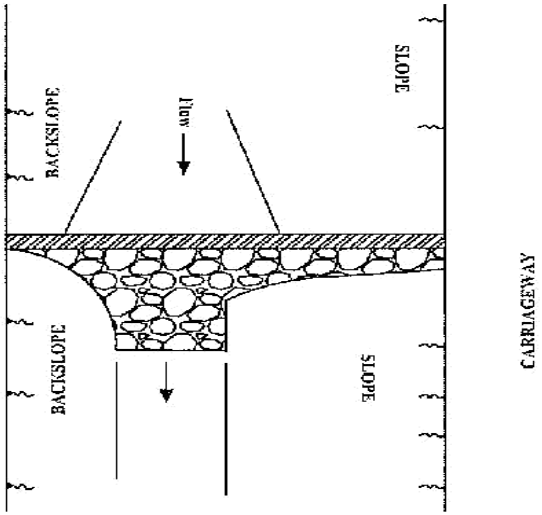

PLAN OF DRAIN WITH SCOUR CHECK

Cross-Section	Sizes in mm			Excav (m3)	Concrete (m3)	Apron stone pitching (m3)
	Length	Width	Depth			
A	2400	100	550	0.13	0.15	0.18
B	2000	100	500	0.10	0.09	0.14

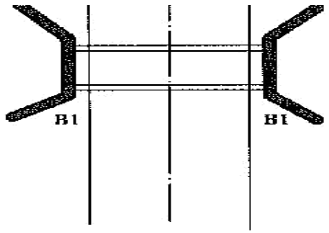

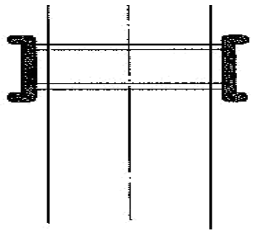

TYPE 2(ENTRY ONLY)

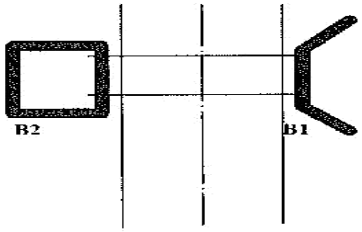

TYPE 4(ENTRY AND EXIT ON ACCESS)

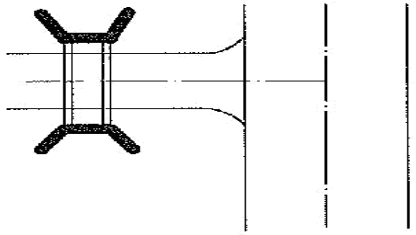

NOTE

1. The code numbers specify the shape and function and the code letter denotes the material:

A =Concrete block
B =Stone masonry
C =Concrete

SECTION A-A

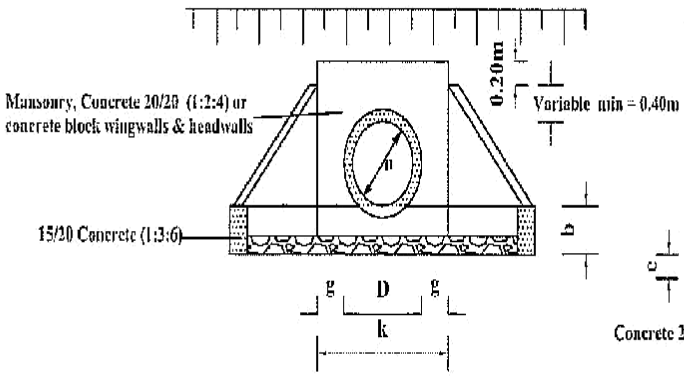

SECTION B-B

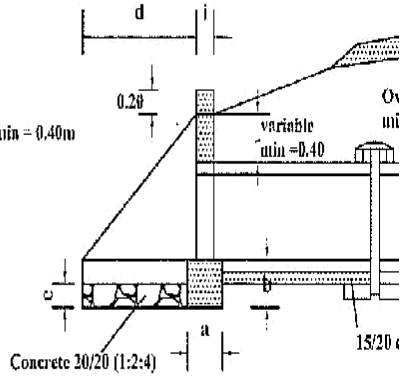

PLAN

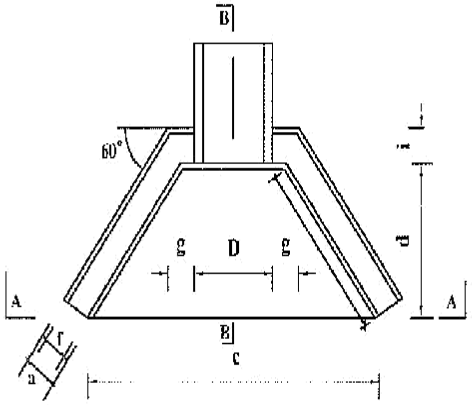

CULVERT TYPES	
X-SECTION WIDTH m	No. of pipes
4.50	6
5.50	7
6.50	8

PIPE DIAMETER IN M		TYPE A and C CONCRETE BL	
		450	600
DIMENSION	UNIT		
a FOUNDATION	m	0.30	0.30
b FOUNDATION	m	0.30	0.30
c FOUNDATION	m	2.20	2.35
d APRON	m	1.00	1.00
e APRON	m	0.20	0.20
f WALL	m	0.20	0.20
g WALL	m	0.30	0.30
h WALL	m	1.15	1.15
i WALL	m	0.20	0.20
k APRON	m	1.05	1.20
MATERIAL REQUIREMENT			
FOUNDATION (concrete)	m3	0.30	0.32
HEAD/WINGWALLS (Concrete/Masonry)	m3	0.42	0.49
APRON (concrete)	m3	0.33	0.36

SECTION A-A

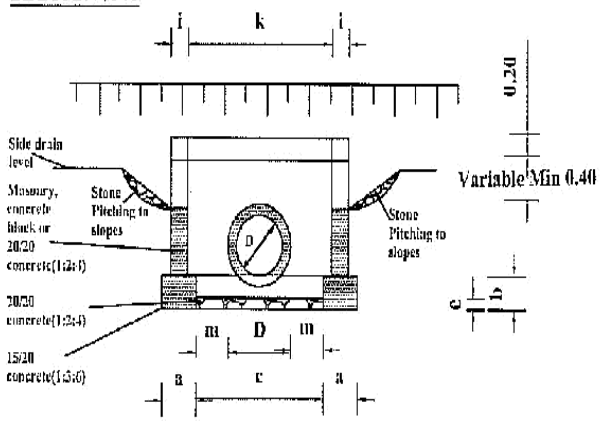

SECTION B-B

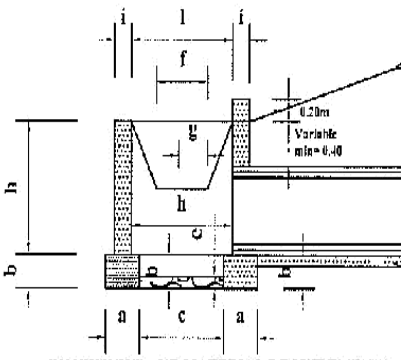

DIMENSIONS AND MATERIAL REQUIREMENTS

PIPE DIAMETER IN (M)		TYPE A CONCRETE BLOCKS			TY MA
		450	600	900	45
DIMENSION	UNIT				
a FOUNDATION	m	0.30	0.30	0.30	0.4
b FOUNDATION	m	0.30	0.30	0.30	0.3
c FOUNDATION	m	1.10	1.10	1.40	1.2
d APRON	m	0.90	0.90	0.90	1.0
e APRON	m	0.20	0.20	0.20	0.2
f DROP INLET	m	0.60	0.60	0.60	0.6
g DROP INLET	m	0.30	0.40	0.60	0.3
h DROP INLET	m	0.60	0.80	1.20	0.6
i DROP INLET	m	0.20	0.20	0.20	0.4
k DROP INLET	m	1.20	1.20	1.50	1.2
l DROP INLET	m	1.00	1.00	1.00	1.0
m DROP INLET	m	0.38	0.30	0.30	0.3
MATERIAL REQUIREMENT					
FOUNDATION (concrete)	m3	0.47	0.47	0.52	0.7
HEAD/WINGWALLS (Concrete/Masonry)	m3	0.56	0.72	1.15	1.2
APRON (concrete)	m3	0.24	0.24	0.30	0.2

PLAN

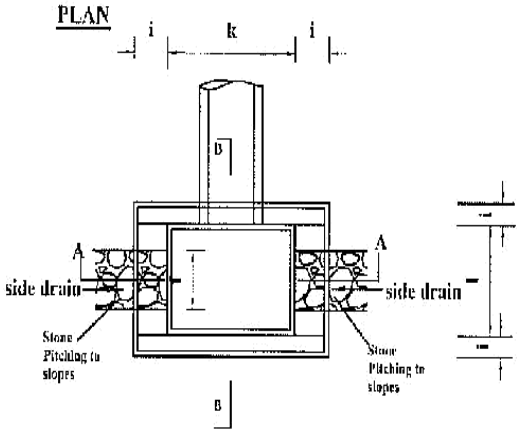

C-12

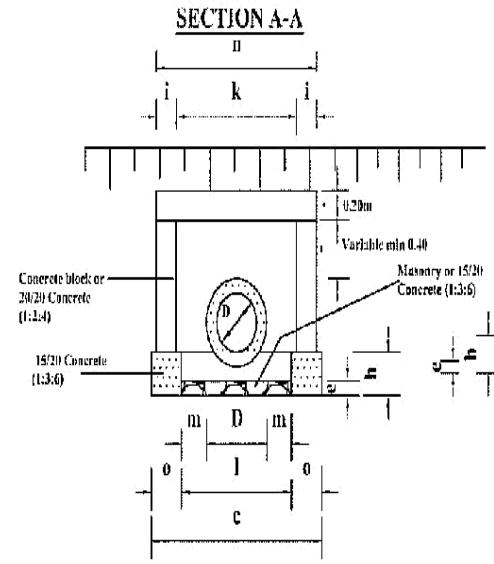

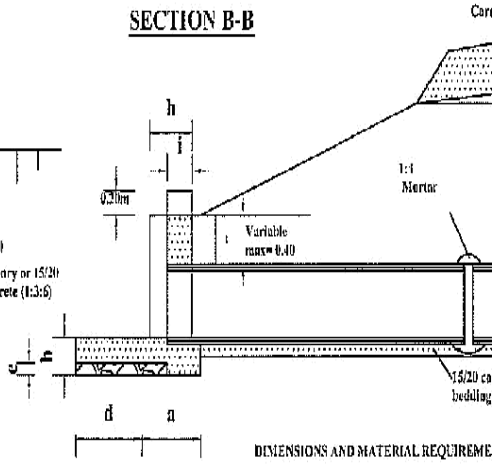

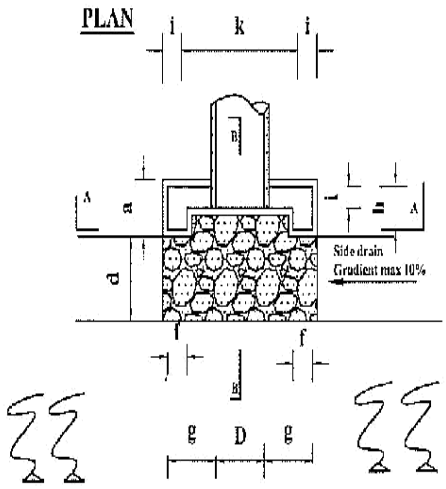

DIMENSIONS AND MATERIAL REQUIREME

	PIPE DIAMETER IN (M)		TYPE A and C CO BLOCKS	
			450	600
	DIMENSION	UNIT		
a	FOUNDATION	m	0.50	0.50
b	FOUNDATION	m	0.30	0.30
c	FOUNDATION	m	1.55	1.70
d	APRON	m	0.60	0.60
e	APRON	m	0.20	0.20
f	HEADWALL	m	0.20	0.20
g	HEADWALL	m	0.50	0.50
h	HEADWALL	m	0.50	0.50
i	HEADWALL	m	0.50	0.50
k	HEADWALL	m	0.50	0.50
l	FOUNDATION	m	0.50	0.50
m	FOUNDATION	m	0.50	0.50
n	HEADWALL	m	0.50	0.50
o	FOUNDATION	m	0.50	0.50
MATERIAL REQUIREMENT				
	FOUNDATION (concrete)		0.23	0.19
	HEADWING/WALLS (Concrete/Masonry)		0.34	0.37
	APRON (concrete)		0.95	0.99

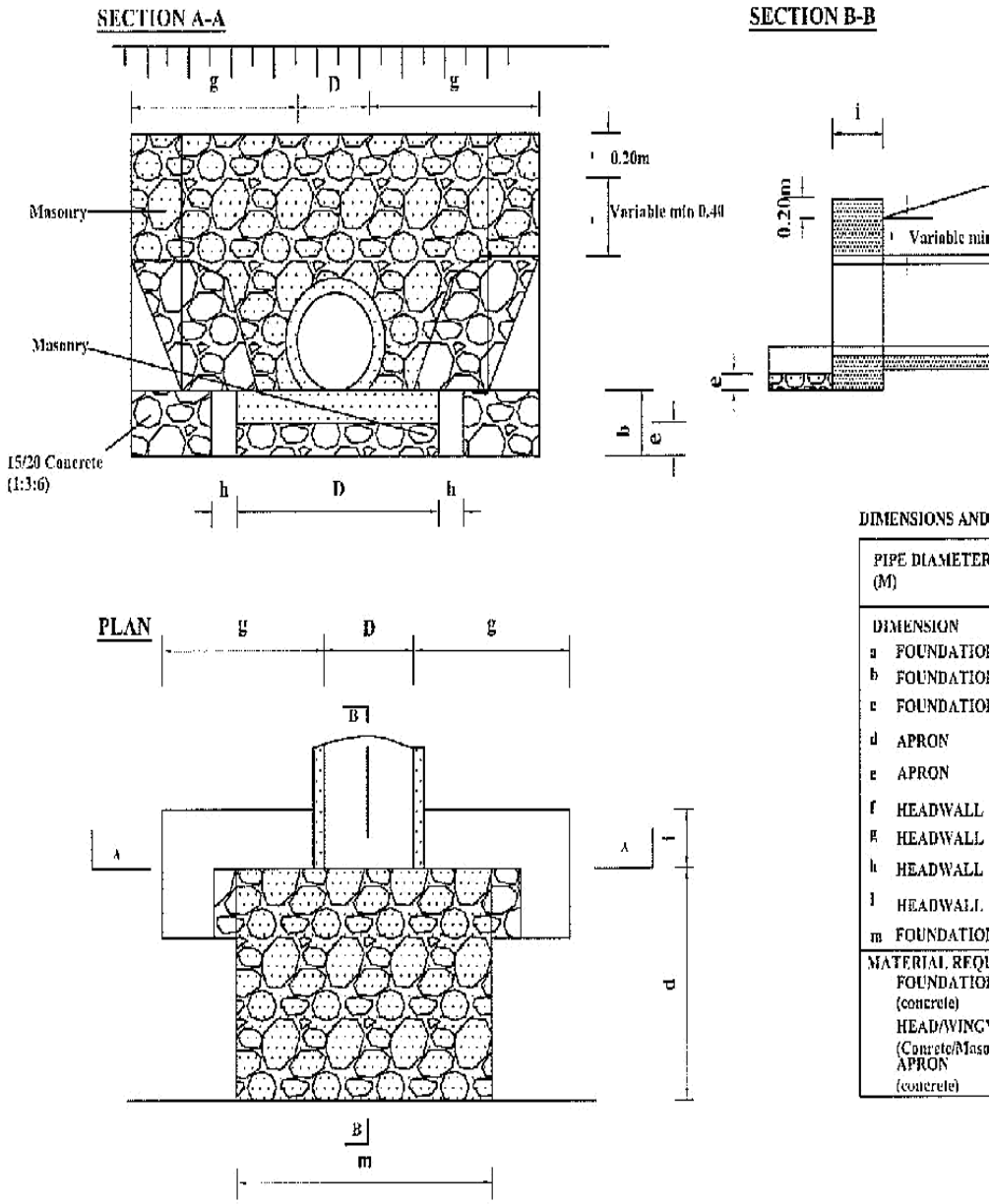
SECTION A-A
SECTION B-B
g
D
g
0.20m
Variable min 0.40
Masonry
Masonry
15/20 Concrete
(1:3:6)
h
D
h
b
e
i
0.20m
Variable min
e
PLAN
g
D
g
B
A
A
i
d
B
m
DIMENSIONS AND
PIPE DIAMETER
(M)
DIMENSION
a FOUNDATIO
b FOUNDATIO
c FOUNDATIO
d APRON
e APRON
f HEADWALL
g HEADWALL
h HEADWALL
i HEADWALL
m FOUNDATIO
MATERIAL REQ
FOUNDATIO
(concrete)
HEAD/WING
(Concrete/Maso
APRON
(concrete)

SECTION A-A

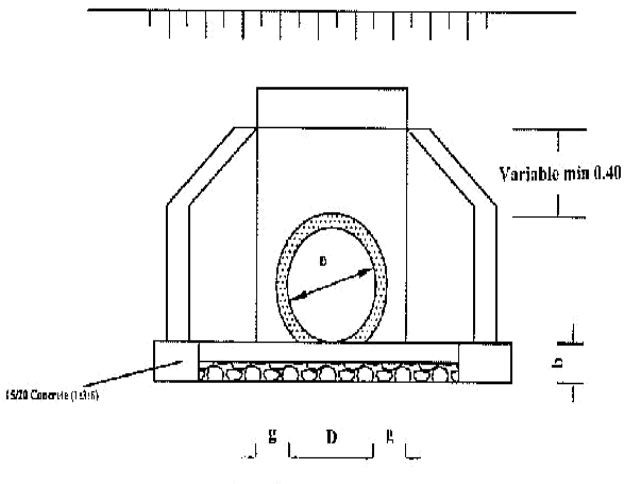

SECTION B-B

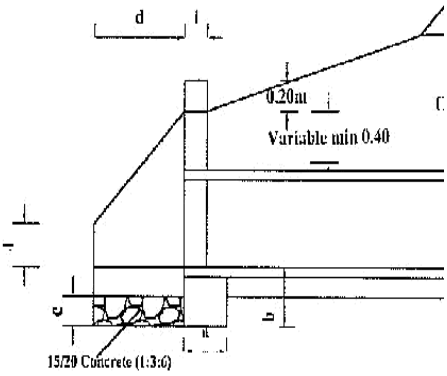

PLAN

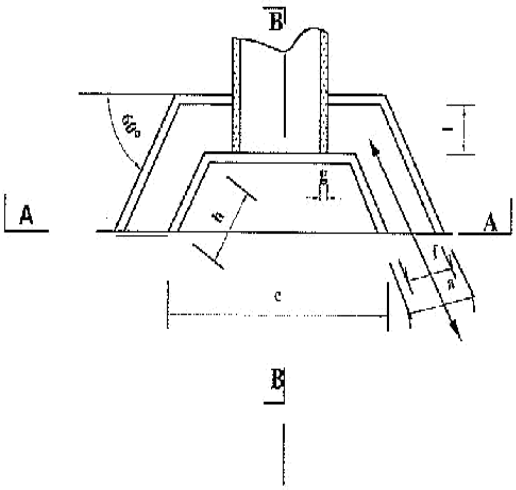

DIMENSIONS AND MATERIAL REQUIREMENTS

	PIPE DIAMETER IN (M)		TYPE A (CONCRETE BLOCKS) 450	600	900
	DIMENSION	UNIT			
a	FOUNDATION	m	0.20	0.30	
b	FOUNDATION	m	0.30	0.30	
c	APRON	m	1.34	1.49	
d	APRON	m	0.60	0.60	
e	APRON	m	0.20	0.20	
f	WINGWALLS	m	0.20	0.20	
g	WINGWALLS	m	0.10	0.10	
h	HEADWALLS	m	0.69	0.69	
j	HEADWALLS	m	0.20	0.30	
k	HEADWALLS	m	0.65	0.80	
l	HEADWALLS	m	0.40	0.40	
MATERIAL REQUIREMENT					
	FOUNDATION (concrete 1:3:6)		0.18	0.20	
	HEAD/WINGWALLS (Concrete/Masonry)		0.28	0.32	
	APRON (concrete)		0.12	0.14	

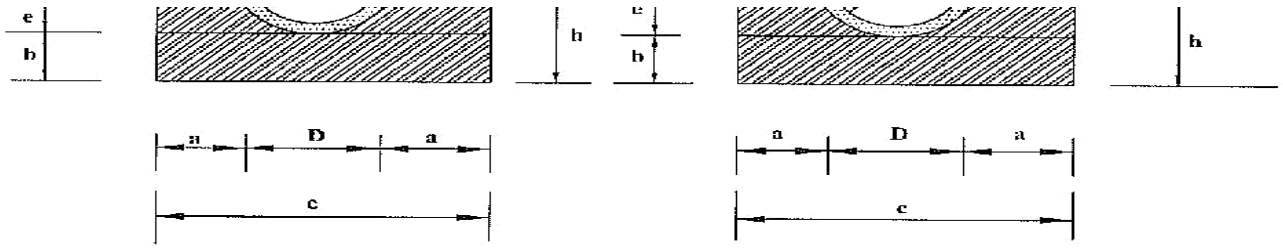

Diameter (D)	450 (mm)	600 (mm)	900 (mm)
a	0.15	0.20	0.20
b	0.10	0.15	0.15
c	0.86	1.12	1.48
d	0.56	0.72	1.08
e	0.14	0.18	0.27
f(min)	0.34	0.45	0.68
g	-	-	-
h	0.24	0.33	0.42
i	-	-	-
Concrete	Volume in (m3/m)		
Class 15/20	0.24	0.24	0.24
Application	-Fair subgrade condition -Overfill > 75% of the pipe diameter -Seasonal water flow only		
Remarks	Material for back/overfill shall be approved by the Engineer		

450 (mm)	600 (mm)	900 (mm)
0.15	0.20	0.20
0.10	0.15	0.15
0.86	1.12	1.48
0.56	0.72	1.08
0.28	0.36	0.54
0.34	0.45	0.68
-	-	-
0.38	0.51	0.69
-	-	-
Volume in (m3/m)		
0.20	0.37	0.56
-Fair to poor subgrade condition -Overfill > 75% of the pipe diameter -Seasonal water flow only		
Material for back/overfill shall be approved by the Engineer		

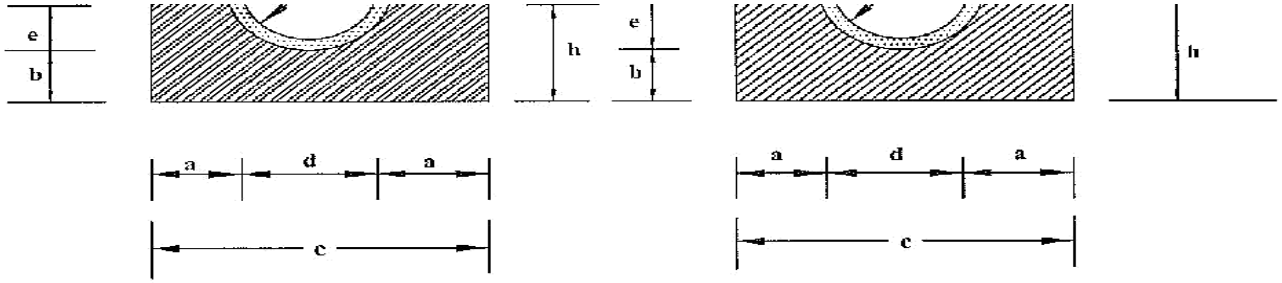

Diameter (D)	450 (mm)	600 (mm)	900 (mm)
a	0.15	0.20	0.20
b	0.10	0.15	0.15
c	0.86	1.12	1.48
d	0.56	0.72	1.08
e	0.42	0.54	0.81
f(min)	0.23	0.3	0.45
g	-	-	-
h	0.52	0.69	0.96
i	-	-	-
Concrete	Volume in (m3/m)		
Class 15/20	0.26	0.47	0.71
Application	-Fair subgrade condition -Overfill > 75% of the pipe diameter -Seasonal water flow only		
Remarks	Material for back/overfill shall be approved by the Engineer		

450 (mm)	600 (mm)	900 (mm)
0.15	0.20	0.20
0.10	0.15	0.15
0.86	1.12	1.48
0.56	0.72	1.08
0.46	0.52	0.78
0.15	0.15	0.15
0.15	0.15	0.15
0.81	1.02	1.38
0.28	0.35	0.45
Volume in (m3/m)		
0.37	0.61	0.92
-Fair to poor subgrade condition -Overfill > 75% of the pipe diameter -Seasonal water flow only		
Material for back/overfill shall be approved by the Engineer		

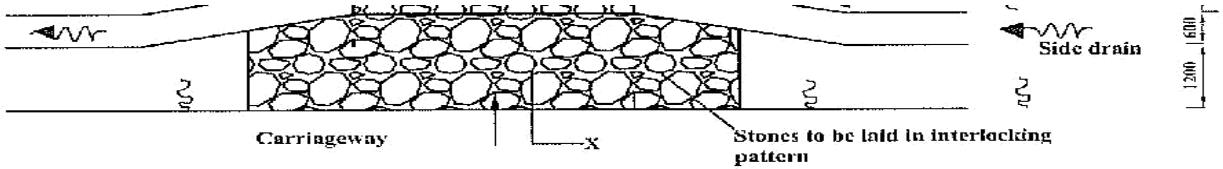

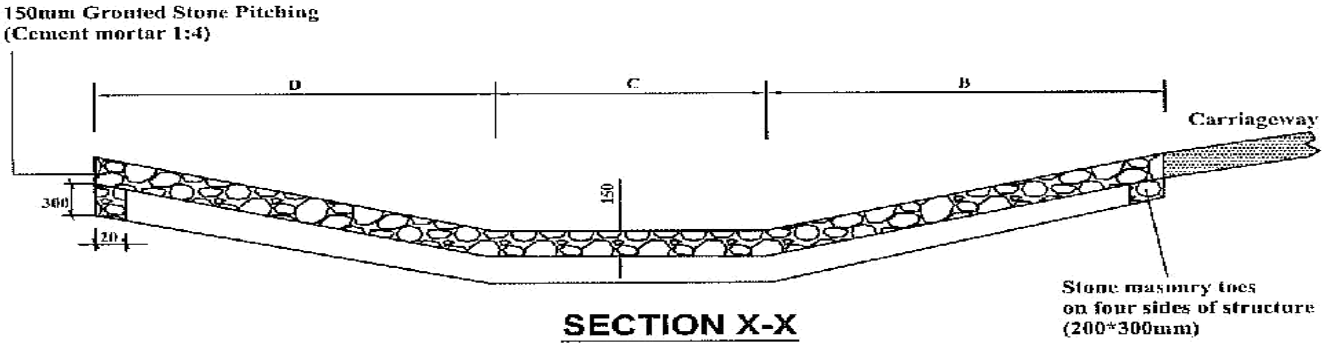

SECTION X-X

QUANTITIES TABLE								
Cross section	DIMENSONS					Excavation(m3)	Stone masonry (m3)	150mm Grouted stone pitching(m3)
	A	B	C	D	E			
A	4000	1800	600	1800	4200	7.5	1.30	21.75
	6000	1800	600	1800	4200	10.00	1.60	30.15
B	4000	1400	400	1800	3600	7.00	1.20	18.30
	6000	1400	400	1800	3600	9.00	1.50	25.50

SECTION B-B

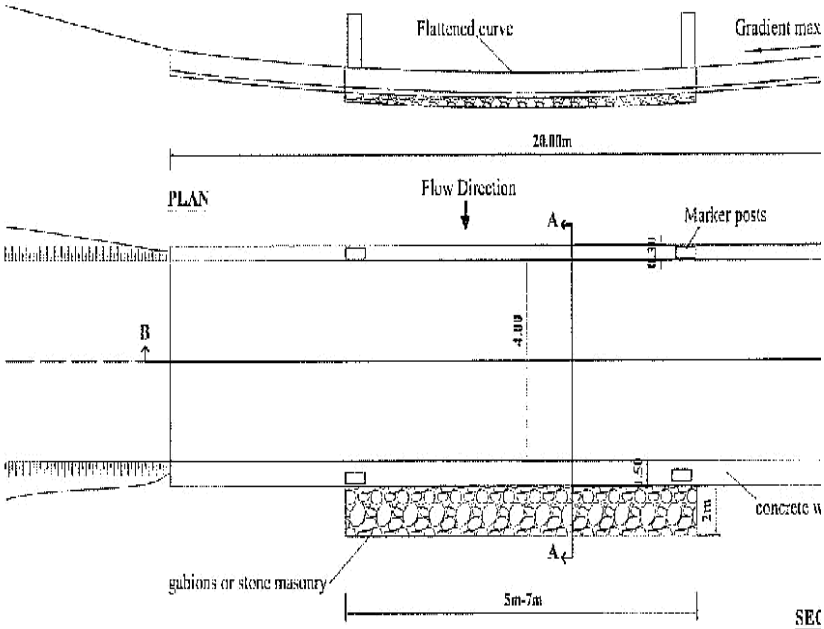

Material : All concrete Class 20/20 (1:2:4)

1 Concrete wall : 10m³
2 Concrete slab: 24m³ or stone masonry
3 Concrete toe : 8m³ or stone masonry
4 Gabions / mattress rock fill: 4.3m³ or stone masonry
5 Gabions /mattress: 36m²
6 Marker posts - precast concrete: 4 no.
7 Excavation (slab + toes + gabions) 54.2m³

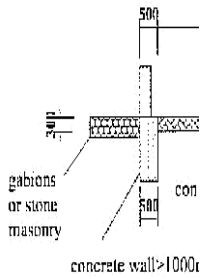

SECTION A-A

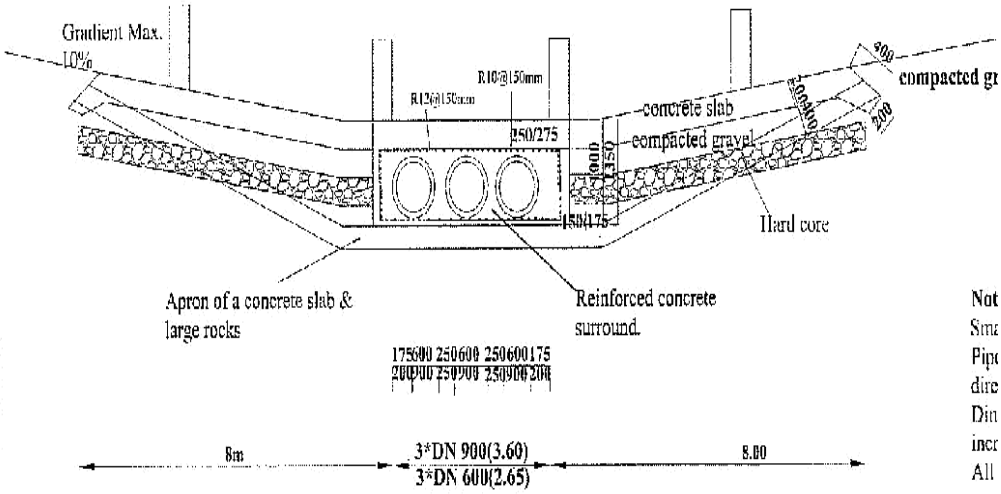

Not
Sma
Pipe
dire
Din
incr
All

PLAN

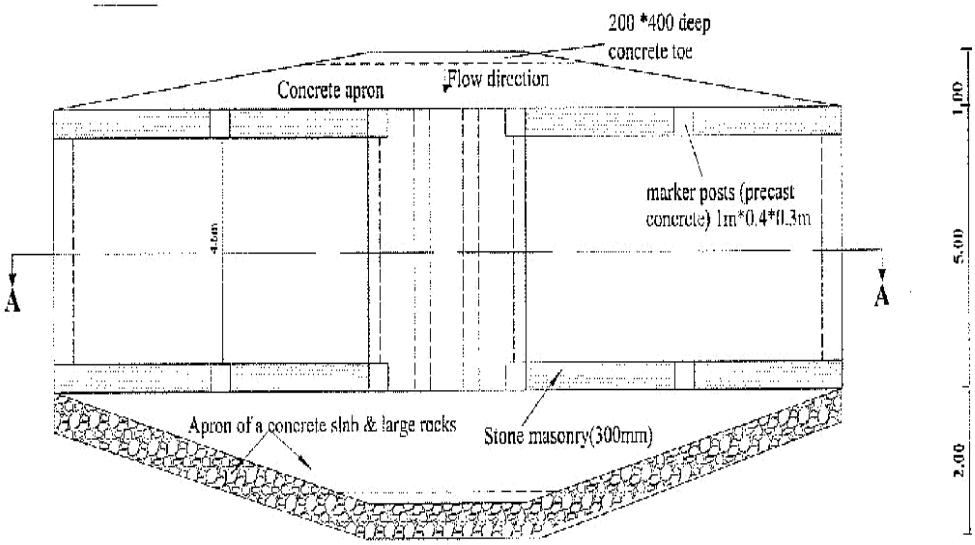

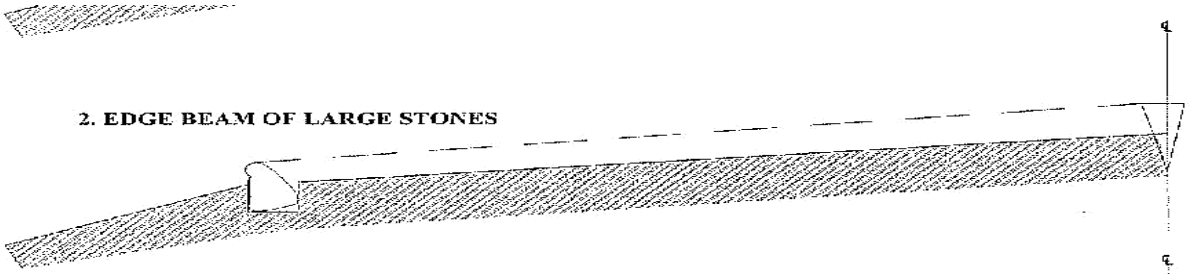

2. EDGE BEAM OF LARGE STONES

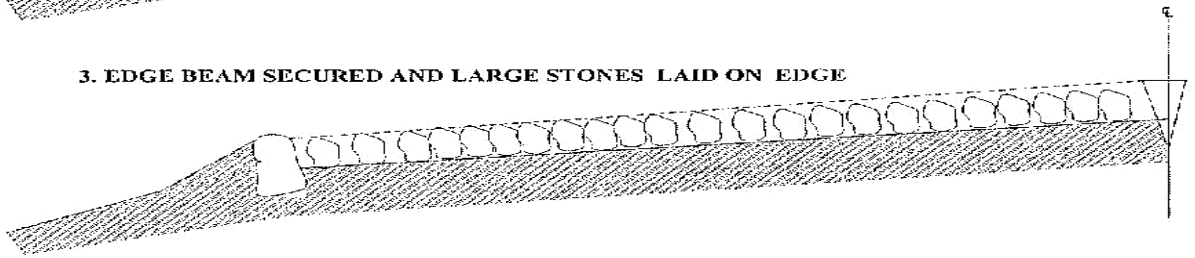

3. EDGE BEAM SECURED AND LARGE STONES LAID ON EDGE

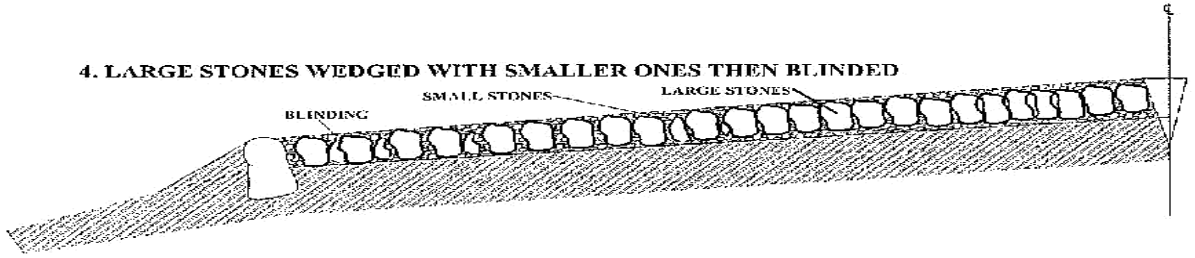

4. LARGE STONES WEDGED WITH SMALLER ONES THEN BLINDED

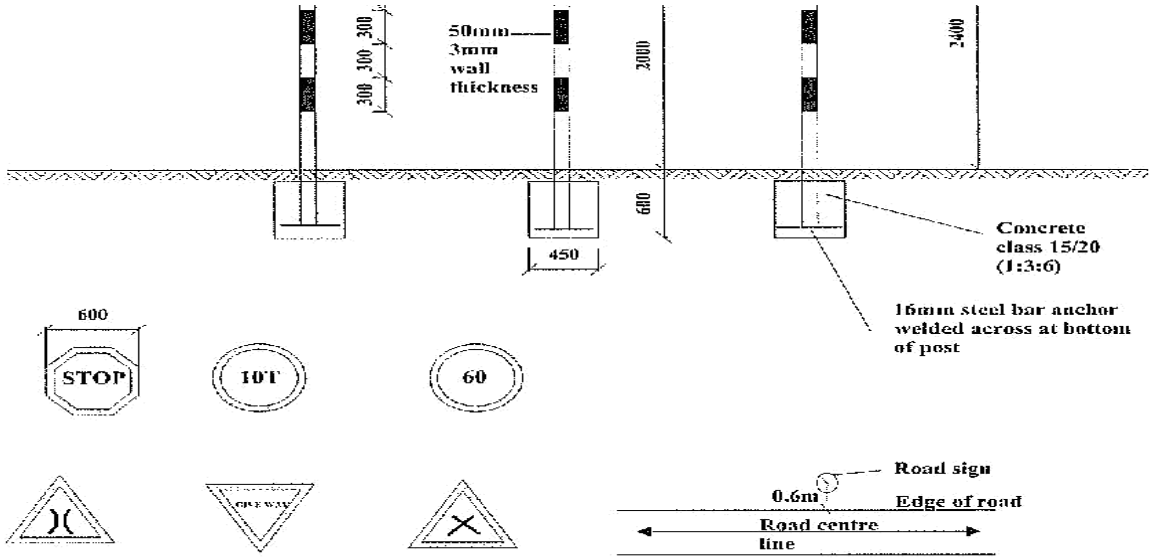

1. The type of sign required and their location shall be as shown on the Road Plan or as directed by the Engineer.
2. Sign plate to be 2mm thick mild steel plate
3. Sign post to be 50mm fixing clamps/brackets.
4. Sign plate to be fixed to steel tube by $ Nos M10 bolts and 50mm fixing clamps/brackets.
5. Sign paints shall be reflective.
6. The sign plate and post shall be treated by applying two coats of lead red oxide paint before applying a priming and two finish coats of approved paints. Paints used shall have a hard, durable and glossy finish.

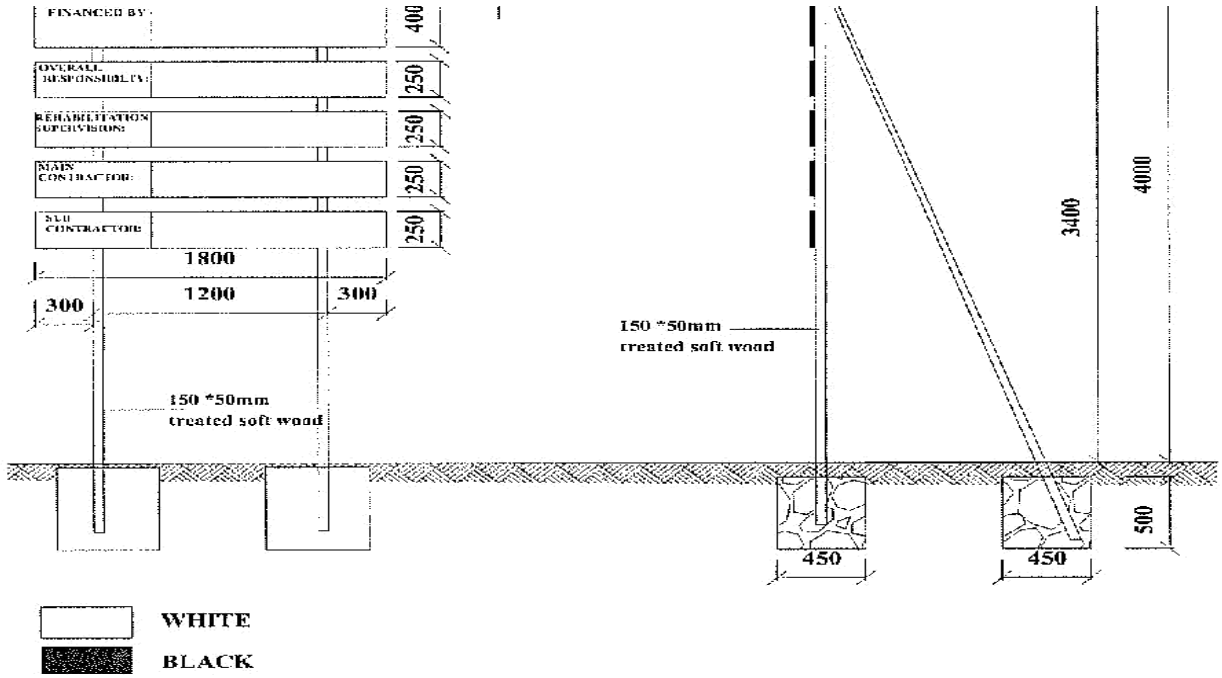

NOTES

1. The wording of the project sign board and the location to be as directed by the Engineer.
2. Materials to be used for fabrication of signboard shall be pressure impregnated treated softwood timber
3. Wording board posts to be attached to the posts with galvanised nails
4. Project board posts and struts to be embedded in concrete class 20/20(1:2:4)

PREAMBLE TO BILLS OF QUANTITIES

1. The Bills of Quantities form part of the Contract Documents and are to be read in conjunction with the Instructions to Tenderers and these Documents.

2. The prices and rates to be inserted in the Bills of Quantities are to be the full, inclusive value of the work described under the several items including all costs and expenses which may be required in and for the execution of the work described and for the Contractor's overheads and profits. The rates shall be VAT exclusive but include all other taxes, levies and fees applicable. The rates shall be based on the Works being carried out in accordance with the R2000 Strategy of using optimum labour resources.

3. Each item in the Bills of Quantities contains only a brief description of the required work. Fuller details and descriptions of the work to be done, the materials to be used, the standards of workmanship, methods of measurement and payment are to be found in the various sections of the Specifications and on the Drawings.

4. The Quantities set out in the Bills of Quantities are estimated and represent substantially the work to be carried out. There is no guarantee that the Contractor will be required to carry out all the quantity of work indicated under any one particular item or group of items in the Bills of Quantities. The basis of payment shall be the Contractor's rates and the quantities of measured work done in fulfilment of the obligations under the Contract.

5. Work shall be carried out under Dayworks items only at the direction, and with the approval, of the Engineer. The Contractor shall enter rates in the Dayworks Schedule of Rates, which shall reflect the realistic costs, including overheads and profit, of each item. If, in the opinion of the Engineer, a rate is unreasonably high or low, the Contractor may be required to amend the rate to the satisfaction of the Engineer.

BILLS OF QUANTITIES

Road Code	**R14**	**Section Name**				
Package: KeRRA/011/BGM/39/BML-22%RMLF SAVINGS/2-52-18|19-537						
Contractor	**0**					
Bill of Quantities					Page: 1	
Bill No.1	**General: Office administration and overheads/Preliminaries**				**Project:**	
Item No.	**Description**	**Units**	**Quantity**	**Unit Bid Rate(Ksh)**	**Amount KSh**	**Technology**
01-60-001	Contract supervision	KS	200,000.00		-	LB-MB
					-	
					-	
					-	
					-	
					-	
					-	
	Total Carried Forward to Summary:				-	

Road Code	**R14**	**Section Name**				
Package: KeRRA/011/BGM/39/BML-22%RMLF SAVINGS/2-52-18|19-537						
Contractor	**0**					
Bill of Quantities					Page: 2	
Bill No.4	**SITE CLEARANCE**				**Project:**	
Item No.	**Description**	**Units**	**Quantity**	**Unit Bid Rate(Ksh)**	**Amount KSh**	**Technology**
04-50-003	Heavy Bush Clearing	M^2	15,000.00	4.00		LB-MB
					-	
					-	
					-	
					-	
					-	
					-	
	Total Carried Forward to Summary:				-	

Road Code	**R14**	**Section Name**				
Package: KeRRA/011/BGM/39/BML-22%RMLF SAVINGS/2-52-18|19-537						
Contractor	**0**					
Bill of Quantities					Page: 3	
Bill No.8	**CULVERT AND DRAINAGE WORKS**				**Project:**	
Item No.	**Description**	**Units**	**Quantity**	**Unit Bid Rate(Ksh)**	**Amount KSh**	**Technology**
08-50-005	Ditch/Mitre drain/Catch water drain excavation	M^3	400			LB
08-60-008	Culvert Cleaning - Fully Blocked - 600mm	MT	12			LB
08-60-025	Culvert Installation 600 mm with surround	METERS	35			LB
					-	
					-	
					-	
					-	
					-	
					-	
					-	
					-	
					-	
					-	
					-	
	Total Carried Forward to Summary:				-	

Road Code	**R14**	**Section Name**				
Package: KeRRA/011/BGM/39/BML-22%RMLF SAVINGS/2-52-18|19-537						
Contractor	**0**					
Bill of Quantities					Page: 4	
Bill No.10	**GRADING AND GRAVELLING WORKS**				**Project:**	
Item No.	**Description**	**Units**	**Quantity**	**Unit Bid Rate(Ksh)**	**Amount KSh**	**Technology**
10-50-001	Heavy grading without watering or compaction instructed by the Engineer	M^2	35,000			MB
10-60-001	Provide gravel wearing course-excavation, free haul, spread, water and compact gravel to specifications	M^3	1,813.01			MB
					-	
					-	
					-	
					-	
					-	
					-	
					-	
					-	
					-	
					-	
					-	
					-	
					-	
					-	
					-	
	Total Carried Forward to Summary:				-	

RoadCode	**C807**	
Structure:		**Section Name**
Package: KeRRA/011/BGM/39/BML-22%RMLF SAVINGS/2-52-18|19-537		**A104 NAMBUCHI - NAKHWANA - MUYENGA - C807 MYANGA**
Contractor	**0**	
Bill of Quantities		Page: 1
	Summary	**Project:**
Item No.	**Description**	**Amount (KShs)**
1	General: Office administration and overheads/Preliminaries	
4	SITE CLEARANCE	-
8	CULVERT AND DRAINAGE WORKS	-
10	GRADING AND GRAVELLING WORKS	-
	Sub Total	
	VAT @ 16 %	
	Total	
	Contingencies (@ 0 %)	
	Carried to page on the form of Tender	