KENYA RURAL ROADS AUTHORITY

Barabara Plaza, bock B, A irport South Road
P.O. Box 48151-00100 Nairobi, Kenya.
Email: kerra.go.ke/dgkerra.go.ke.

(GARISSA REGION)

IJARA CONSTITUENCY:

STANDARD TENDER DOCUMENT FOR:
SPOT IMPROVEMENT OF MASALANI-IJARA (C-256) ROAD:

VOTE/FUNDING:
GOK/PUBLIC PARTICIPATION FUND:

FINANCIAL YEAR: 2020-2021

INVITATION TO TENDER(ITT) No:
KeRRA/011/GSA/39/077/2020-2021

RESERVED FOR: OPEN

AUGUST, 2021

DIRECTOR GENERAL **KENYA RURAL ROADS AUTHORITY,** **P.O. BOX 48151-00100,** **NAIROBI.**	**DIRECTOR (ROAD ASSET MANAGEMENT),** **KENYA RURAL ROADS AUTHORITY,** **P.O. BOX 48151– 00100,** **NAIROBI**

TABLE OF CONTENTS

PART 1:TENDERING PROCEDURES 1

SECTION I – INSTRUCTIONS TO TENDERERS 1

A. GENERAL PROVISIONS 1
1.0 Scope of tender 1
2.0 Fraud and corruption 1
3.0 Eligible tenderers 1
4.0 Eligible goods, equipment, and services 3
5.0 Tenderer's responsibilities 3

B. CONTENTS OF TENDER DOCUMENTS 3

6.0 Sections of Tender Document 3
7.0 Clarification of Tender Document, Site Visit, Pre-tender Meeting 4
8.0 Amendment of Tender Documents 5
10.0 Language of Tender 5
11.0 Documents Comprising the Tender 5
12.0 Form of Tender and Schedules 5
13. AlternativeTenders 6
14.0 Tender Pricesand Discounts 6
15.0 Currencies of Tenderand Payment 6
16.0 Documents Comprising the Technical Proposal 7
17.0 Documents Establishing the Eligibility and Qualifications of the Tenderer 7
18.0 Period of Validity of Tenders 8
19.0 Tender Security 8

20.0 Format and Signing of Tender 9

D. SUBMISSION AND OPENING OF TENDERS 9

21.0 Sealing and Marking of Tenders 9
22.0 Deadline for Submission of Tenders 10
23.0 Late Tenders 10
24.0 Withdrawal, Substitution, and Modification of Tenders 10
25. Tender Opening 10

E. EVALUATION AND COMPARISON OF TENDERS 11

26. Confidentiality 11
27.0 Clarification of Tenders 11
29.0 Determination of Responsiveness 12
30.0 Non-material Non-conformities 12
31.0 Arithmetical Errors 12
33.0 Margin of Preference and Reservations 13
34.0 Nominated Subcontractors 13

35. Evaluation ofTenders 13
36.0 Comparison of tenders 14
37.0 Abnormally low tenders and abnormally high tenders 14
Abnormally LowTenders 14
Abnormally high tenders 14
38.0 Unbalanced and/or front-loaded tenders 14
39.0 Qualifications of the tenderer 15
40.0 Lowest evaluated tender 15
41.0 Procuring entity's right to accept any tender, and to reject any or all tenders 15

F. **AWARD OF CONTRACT** 15

42.0 Award criteria 15
43.0 Notice of intention to enter into a contract 15
44.0 Standstill Period 16
44.0 Standstill Period 16
45.0 Debriefing by The Procuring Entity 16
46.0 Letter of Award 16
47.0 Signing of Contract 16
48.0 Performance Security 16
49.0 Publication of Procurement Contract 16
50.0 Procurement related Complaint 17

SECTION II – TENDER DATA SHEET(TDS) 18

SECTION III - EVALUATION AND QUALIFICATION CRITERIA 23

1. General Provisions 23
2. Preliminary examination for Determination of Responsiveness 23
3. Tender Evaluation 23
4. Multiple Contracts 23
5. AlternativeTenders 24
6. Margin of Preference 24
7. Post qualification and Contract award 24

SECTION IV –TENDERING FORMS 29

QUALIFICATION FORMS 30

1. FOREIGN TENDERERS40% RULE 30
3. Form EQU: EQUIPMENT 31
4. FORM PER -1 32
5. FORM PER- 2: 33
6. TENDERERS QUALIFICATION WITHOUT PRE-QUALIFICATION 35
6.1 FORM ELI -1.1 35
6.2 FORM ELI -1.2 36
6.3 FORM CON– 2 37
6.4 FORM FIN– 3.1: 39
6.5 FORM FIN– 3.2: 40
6.6 FORM FIN– 3.3: 41
6.7 FORM FIN– 3.4: 41
6.8 FORM EXP- 4.1 42

6.9 FORM EXP- 4.2 (a) 43
6.10 FORM EXP- 4.2 (b) 44

OTHER FORMS 46

7. FORM OFTENDER 46
   a) TENDERER'S ELIGIBILITY- CONFIDENTIAL BUSINESS QUESTIONNAIRE 49
   b) CERTIFICATE OF INDEPENDENT TENDER DETERMINATION 52

c) SELF-DECLARATION FORM - SELF DECLARATION OF THE TENDERER 53
d) APPENDIX 1- FRAUD AND CORRUPTION 55

8. FORM OF TENDER SECURITY – DEMAND BANK GUARANTEE 57
9. FORM OF TENDER SECURITY (TENDER BOND) 58
10. FORM OFTENDER-SECURING DECLARATION. 59
11. APPENDIXTOTENDER 60

TECHNICAL PROPOSAL FORMS 60

12. Site Organization 60
13. Method Statement 60
14 Mobilization Schedule 60
15 Construction Schedule 60

PART 2–WORKS' REQUIREMENTS **60**

SECTION V – BILL OF QUANTITIES 61
1. Objectives 61
2. Content 61
3. Preamble 61
4. Rock 61
5. Work Items 61
6. Quantities 61
7. Units of Measurement 62
8. Ground and Excavation Levels 62
9. Daywork Schedule 62
10. Provisional Quantities and Sums 62
11. Summary 63
12 Sample Bills of Quantities 63
A. Preamble 63
B. Work Items 63
C. Schedule of Daywork Rates 66
12. Grand Summary 72

SECTION VI- SPECIFICATIONS 72

SECTION VII- DRAWINGS 73

SUPPLEMENTARY INFORMATION 74

PART 3 – CONDITIONS OF CONTRACT AND CONTRACT FORMS **75**

SECTION VIII - GENERAL CONDITIONS OF CONTRACT 75

1. GENERAL CONDITIONS 76
2. THE PROCURING ENTITY 82
3. THE ENGINEER 83

4. THE CONTRACTOR 85
5. NOMINATED SUB CONTRACTORS 93
6. STAFFAND LABOR 94
7. Plant, Materials and Workmanship 97
8. COMMENCEMENT, DELAYS AND SUSPENSION 99
9. TESTS ON COMPLETION 102
10. Procuring Entity's Taking Over 103
11. Defects Liability 104
12. MEASUREMENT AND EVALUATION 106
13. VARIATIONS AND ADJUSTMENTS 108
14. Contract Price and Payment 112
15. TERMINATION BY PROCURING ENTITY 121
16. SUSPENSION AND TERMINATION BY CONTRACTOR 119
17. RISKAND RESPONSIBILITY 121
18. INSURANCE 123
19. FORCE MAJEURE 126
20. CLAIMS, DISPUTES AND ARBITRATION 128

SECTION IX - ARTICULAR CONDITIONS OF CONTRACT 131

SECTION X –CONTRACT FORMS 134

FORM No. 1 - NOTIFICATION OF INTENTION TO AWARD 135
FORM No. 2 - NOTIFICATION OF AWARD – LETTER OF ACCEPTANCE 137
FORM No. 3 -CONTRACTAGREEMENT 138
FORM No. 4 - PERFORMANCE SECURITY [Option 1 - Unconditional Demand Bank Guarantee] 139
FORM No. 5 - PERFORMANCE SECURITY [Option 2–Performance Bond] 140
FORM No. 6 – ADVANCE PAYMENT SECURITY 141
FORM No. 7 – RETENTION MONEY SECURITY 143

PART 1 - TENDERING PROCEDURES

SECTION I-INSTRUCTIONS TO TENDERERS

A GENERAL PROVISIONS:

1. Sope ofTender.

1.1 The Procuring Entity as defined in the Appendix to Conditions of Contract invites tenders for Works Contract as described in the tender documents. The name, identification, and number of lots (contracts) of this Tender Document are specified in the TDS.

2. Fraud and Corruption.

2.1 The Procuring Entity requires compliance with the provisions of the Public Procurement and Asset Disposal Act, 2015, Section 62 "Declaration not to engage in corruption". The tender submitted by a person shall include a declaration that the person shall not engage in any corrupt or fraudulent practice and a declaration that the person or his or her sub-contractors are not debarred from participating in public procurement proceedings.

2.2 The Procuring Entity requires compliance with the provisions of the Competition Act 2010, regarding collusive practices in contracting. Any tenderer found to have engaged in collusive conduct shall be disqualified and criminal and/or civil sanctions may be imposed. To this effect, Tenders shall be required to complete and sign the "Certificate of Independent Tender Determination" annexed to the Form of Tender.

2.3 Tenderers shall permit and shall cause their agents (where declared or not), subcontractors, sub-consultants, service providers, suppliers, and their personnel, to permit the Procuring Entity to inspect all accounts, records and other documents relating to any initial selection process, pre-qualification process, tender submission, proposal submission, and contract performance (in the case of award), and to have them audited by auditors appointed by the Procuring Entity.

2.4 Unfair Competitive Advantage -Fairness and transparency in the tender process require that the firms or their Affiliates competing for a specific assignment do not derive a competitive advantage from having provided consulting services related to this tender. To that end, the Procuring Entity shall indicate in the Data Sheet and make available to all the firms together with this tender document all information that would in that respect give such firm any unfair competitive advantage over competing firms.

3. EligibleTenderers.

3.1 A Tenderer may be a firm that is a private entity, a state-owned enterprise or institution subject to ITT 3.8, or an individual or any combination of such entities in the form of a joint venture (JV) under an existing agreement or with the intent to enter into such an agreement supported by a letter of intent. In the case of a joint venture, all members shall be jointly and severally liable for the execution of the entire Contract in accordance with the Contract terms. The JV shall nominate a Representative who shall have the authority to conduct all business for and on behalf of any and all the members of the JV during the tendering process and, in the event the JV is awarded the Contract, during contract execution. Members of a joint venture may not also make an individual tender, be a subcontractor in a separate tender or be part of another joint venture for the purposes of the same Tender. The maximum number of JVmembers shall be specified in the **TDS.**

3.2 Public Officers of the Procuring Entity, their Spouses, Child, Parent, Brothers or Sister. Child, Parent, Brother or Sister of a Spouse, their business associates or agents and firms/organizations in which they have a substantial or controlling interest shall not be eligible to tender or be awarded a contract. Public Officers are also not allowed to participate in any procurement proceedings.

3.3 A Tenderer shall not have a conflict of interest. Any tenderer found to have a conflict of interest shall be disqualified. A tenderer may be considered to have a conflict of interest for the purpose of this tendering process, if the tenderer:

a) Directly or indirectly controls, is controlled by or is under common control with another tenderer; or

b) Receives or has received any direct or indirect subsidy from another tenderer; or

c) Has the same legal representative as another tenderer; or

d) Has a relationship with another tenderer, directly or through common third parties, that puts it in a position to influence the tender of another tenderer, or influence the decisions of the Procuring Entity regarding this tendering process; or

e) Any of its affiliates participated as a consultant in the preparation of the design or technical specifications of the goods or works that are the subject of the tender; or

f) any of its affiliates has been hired (or is proposed to be hired) by the Procuring Entity as a consultant for Contract implementation; or

g) Would be providing goods, works, or non-consulting services resulting from or directly related to consulting services for the preparation or implementation of the contract specified in this Tender Document; or

h) Has a close business or personal elationship with senior management or professional staff of the Procuring Entity who has the ability to influence the bidding process and:

i) are directly or indirectly involved in the preparation of the Tender document or specifications of the Contract, and/or the Tender evaluation process of such contract; or

ii) may be involved in the implementation or supervision of such Contract unless the conflict stemming from such relationship has been resolved in a manner acceptable to the Procuring Entity throughout the tendering process and execution of the Contract.

3.4 A tenderer shall not be involved incorrupt, coercive, obstructive or fraudulent practice. A tenderer that is proven to have been involved in any of these practices shall be automatically disqualified.

3.5 A Tenderer (either individually or as a JV member) shall not participate in more than one Tender, except for permitted alternative tenders. This includes participation as a subcontractor in other Tenders. Such participation shall result in the disqualification of all Tenders in which the firm is involved. Members of a joint venture may not also make an individual tender, be a subcontractor in a separate tender or be part of another joint venture for the purposes of the same Tender. A firm that is not a tenderer or a JV member may participate as a subcontractor in more than one tender.

3.6 A Tenderer may have the nationality of any country, subject to the restrictions pursuant to ITT3.9. A Tenderer shall be deemed to have the nationality of a country if the Tenderer is constituted, incorporated or registered in and operates inconformity with the provisions of the laws of that country, as evidenced by its articles of incorporation (or equivalent documents of constitution or association) and its registration documents, as the case may be. This criterion also shall apply to the determination of the nationality of proposed subcontractors or sub-consultants for any part of the Contract including related Services.

3.7 A Tenderer that has been debarred from participating in public procurement shall be ineligible to tender or be awarded a contract. The list of debarred firms and individuals is available from the website of PPRA www.ppra.go.ke.

3.8 A Tenderer that is a state-owned enterprise or a public institution in Kenya may be eligible to tender and be awarded a Contract(s) only if it is determined by the Procuring Entity to meet the following conditions, i.e. if it is:

a) A legal public entity of Government and/or public administration,

b) financially autonomous and not receiving any significant subsidies or budget support from any public entity or Government, and

c) operating under commercial law and vested with legal rights and liabilities similar to any commercial enterprise to enable it compete with firms in the private sector on an equal basis.

3.9 Firms and individuals shall be ineligible if their countries of origin are:

a) as a matter of law or official regulations, Kenya prohibits commercial relations with that country, or

b) by an act of compliance with a decision of the United Nations Security Council taken under Chapter VII of the Charter of the United Nations, Kenya prohibits any import of goods or contracting of works or services from that country, or any payments to any country, person, or entity in that country.

A tenderer shall provide such documentary evidence of eligibility satisfactory to the Procuring Entity, as the Procuring Entity shall reasonably request.

3.10 Foreign tenderers are required to source at least forty (40%) percent of their contract inputs (in supplies, local subcontracts and labor) from citizen suppliers and contractors. To this end, a foreign tenderer shall provide inits tender documentary evidence that this requirement is met. Foreign tenderers not meeting this criterion will be automatically disqualified. Information required to enable the Procuring Entity determine if this condition is met shall be provided for this purpose in *"SECTION III-EVALUATION AND QUALIFICATION CRITERIA, Item 9"*.

3.11 Pursuant to the eligibility requirements of ITT4.10, a tender is considered a foreign tenderer, if the tenderer is not

registered in Kenya or if the tenderer is registered in Kenya and has less than 51 percent ownership by Kenyan citizens. JVs are considered as foreign tenderers if the individual member firms are not registered in Kenya or if are registered in Kenya and have less than 51 percent ownership by Kenyan citizens. The JV shall not subcontract to foreign firms more than 10 percent of the contract price, excluding provisional sums.

3.12 The National Construction Authority Act of Kenya requires that all local and foreign contractors be registered with the National Construction Authority and be issued with a Registration Certificate before they can undertake any construction works in Kenya. Registration shall not be a condition for tender, but it shall be a condition of contract award and signature. A selected tenderer shall be given opportunity to register before such award and signature of contract. Application for registration with National Construction Authority may be accessed from the website www.nca.go.ke.

3.13 The Competition Act of Kenya requires that firms wishing to tender as Joint Venture undertakings which may prevent, distort or lessen competition in provision of services are prohibited unless they are exempt in accordance with the provisions of Section 25 of the Competition Act, 2010. JVs will be required to seek for exemption from the Competition Authority. Exemption shall not be a condition for tender, but it shall be a condition of contract award and signature. A JV tenderer shall be given opportunity to seek such exemption as a condition of award and signature of contract. Application for exemption from the Competition Authority of Kenya may be accessed from the website www.cak.go.ke.

Kenyan tenderer shall be eligible to tender if it provides evidence of having fulfilled his/her tax obligations by producing a valid tax compliance or valid tax certificate issued by the Kenya Revenue Authority.

4. Eligible Goods, Equipment, and Services.

4.1 Goods, equipment and services to be supplied under the Contract may have their origin in any country that is not ineligible under ITT3.9. At the Procuring Entity's request, Tenderers may be required to provide evidence of the origin of Goods, equipment and services.

4.2 Any goods, works and production processes with characteristics that have been declared by the relevant national environmental protection agency or by other competent authority as harmful to human beings and to the environment shall not be eligible for procurement.

5. Tenderer's Responsibilities.

5.1 The tenderer shall bear all costs associated with the preparation and submission of his/her tender, and the Procuring Entity will in no case be responsible or liable for those costs.

5.2 The tenderer, at the tenderer's own responsibility and risk, is encouraged to visit and examine and inspect the Site of the Works and its surroundings and obtain all information that may be necessary for preparing the tender and entering into a contract for construction of the Works. The costs of visiting the Site shall be at the tenderer's own expense.

5.3 The Tenderer and any of its personnel or agents will be granted permission by the Procuring Entity to enter up on its premises and lands for the purpose of such visit. The Tenderer shall indemnify the Procuring Entity against all liability arising from death or personal injury, loss of or damage to property, and any other losses and expenses incurred as a result of the examination and inspection.

5.4 The tenderer shall provide in the Form of Tender and Qualification Information, a preliminary description of the proposed work method and schedule, including charts, as necessary or required.

B: CONTENTS OF TENDER DOCUMENTS:

6. Sections of Tender Document.

6.1 The tender document consists of Parts 1, 2, and 3, which includes all the sections specified below, and which should be read in conjunction with any Addenda issued in accordance with ITT.

PART 1: Tendering Procedures.
Section I: Instructions to Tenderers
Section II: Tender Data Sheet (TDS)

Section III: Evaluation and Qualification Criteria
Section IV: Tendering Forms.

PART 2: Works' Requirements.
Section V: Bills of Quantities
Section VI: Specifications
Section VII: Drawings.

PART3: Conditions of Contract and Contract Forms.
Section VIII: General Conditions (GCC).
Section IX: Particular Conditions of Contract.
Section X: Contract Forms.

6.2 The Invitation toTender Notice issued by the Procuring Entity is not part of the Contract documents.

6.3 Unless obtained directly from the Procuring Entity, the Procuring Entity is not responsible for the completeness of the Tender document, responses to requests for clarification, the minutes of a pre-arranged site visit and those of the pre-Tender meeting (if any), or Addenda to the Tender document in accordance with ITT 10. In case of any contradiction, documents obtained directly from the Procuring Entity shall prevail.

6.4 The Tenderer is expected to examine all instructions, forms, terms, and specifications in the Tender Document and to furnish with its Tender all information and documentation as is required by the Tender document.

7. Clarification of Tender Document, Site Visit, Pre-Tender Meeting.

7.1 A Tenderer requiring any clarification of the Tender Document shall contact the Procuring Entity in writing at the Procuring Entity's address **specified in the TDS** or raise its enquiries during the pre-Tender meeting if provided for in accordance with ITT 7.2. The Procuring Entity will respond in writing to any request for clarification, provided that such request is received no later than the period specified in the **TDS p**rior to the deadline for submission of tenders. The Procuring Entity shall forward copies of its response to all tenderers who have acquired the Tender documents in accordance with ITT 7.4, including a description of the inquiry but without identifying its source. If so specified **in the TDS**, the Procuring Entity shall also promptly publish its response at the web page identified in the **TDS**. Should the clarification result in changes to the essential elements of the Tender Documents, the Procuring Entity shall amend the Tender Documents following the procedure under ITT 8 and ITT 22.2.

7.2 The Tenderer, at the Tenderer's own responsibility and risk, is encouraged to visit and examine and inspect the site(s) of the required contracts and obtain all information that may be necessary for preparing a tender. The costs of visiting the Site shall be at the Tenderer's own expense. The Procuring Entity shall specify in the **TDS** if a pre-arranged Site visit and or a pre-tender meeting will be held, when and where. The Tenderer's designated representative is invited to attend a pre-arranged site visit and a pre-tender meeting, as the case may be. The purpose of the site visit and the pre-tender meeting will be to clarify issues and to answer questions on any matter that may be raised at that stage.

7.3 The Tenderer is requested to submit any questions in writing, to reach the Procuring Entity not later than the period specified in the **TDS** before the meeting.

7.4 Minutes of a pre-arranged site visit and those of the pre-tender meeting, if applicable, including the text of the questions asked by Tenderers and the responses given, together with any responses prepared after the meeting, will be transmitted promptly to all Tenderers who have acquired the Tender Documents. Minutes shall not identify the source of the questions asked.

7.5 The Procuring Entity shall also promptly publish anonym zed (*no names*) Minutes of the pre-arranged site visit and those of the pre-tender meeting at the web page identified **in the TDS**. Any modification to the Tender Documents that may become necessary as a result of the pre-arranged site visit and those of the pre-tender meeting shall be made by the Procuring Entity exclusively through the issue of an Addendum pursuant to ITT 8 and not through the minutes of the pre-Tender meeting. Non-attendance at the pre-arranged site visit and the pre-tender meeting will not be a cause for disqualification of a Tenderer.

8. Amendment of Tender Documents.

8.1 At any time prior to the deadline for submission of Tenders, the Procuring Entity may amend the Tender Documents by issuing addenda.

8.2 Any addendum issued shall be part of the Tender Documents and shall be communicatedinwritingtoall who have obtained the Tender Documents from the Procuring Entity. The Procuring Entity shall also promptly publish the addendum on the Procuring Entity's website in accordance with ITT 7.5.

8.3 To give Tenderers reasonable time in which to take an addendum into account in preparing their Tenders, the Procuring Entity should extend the deadline for the submission of Tenders, pursuant to ITT 22.2.

D. PREPARATION OF TENDERS

9. Cost of Tendering.

The Tenderer shall meet all costs associated with the preparation and submission of its Tender, and the Procuring Entity shall not be responsible or liable for those costs, regardless of the conduct or outcome of the tendering process.

10. LanguageofTender.

The Tender, as well as all correspondence and documents relating to the tender exchanged by the tenderer and the Procuring Entity, shall be written in the English Language. Supporting documents and printed literature that are part of the Tender may be in another language provided they are accompanied by an accurate and notarized translation of the relevant passages into the English Language, in which case, for purposes of interpretation of the Tender, such translation shall govern.

11. Documents Comprising the Tender.

11.1 The Tender shall comprise the following:

a) Form of Tender prepared in accordance with ITT 12;
b) Schedules including priced Bill of Quantities, completed in accordance with ITT 12 and ITT 14;
c) Tender Security or Tender-Securing Declaration, in accordance with ITT 19.1;
d) Alternative Tender, if permissible, in accordance with ITT 13;
e) Authorization: written confirmation authorizing the signatory of the Tender to commit the Tenderer, in accordance with ITT 20.3;
f) Qualifications: documentary evidence in accordance with ITT 17 establishing the Tenderer's qualifications to perform the Contract if its Tender is accepted;
g) Conformity: a technical proposal in accordance with ITT 16;
h) Any other document required in the TDS.

11.2 In addition to the requirements under ITT 11.1, Tenders submitted by a JV shall include a copy of the Joint Venture Agreement entered into by all members. Alternatively, a letter of intent to execute a Joint Venture Agreement in the event of a successful Tender shall be signed by all members and submitted with the Tender, together with a copy of the proposed JV Agreement. Change of membership and conditions of the JV prior to contract signature will render the tender liable for disqualification.

12. Form of Tender and Schedules.

12.1 The Form of Tender and Schedules, including the Bill of Quantities, shall be prepared using the relevant forms furnished in Section IV, Tendering Forms. The forms must be completed without any alterations to the text, and no substitutes shall be accepted except as provided under ITT 20.3. All blank spaces shall be filled in with the information requested. The Tenderer shall chronologically serialize all pages of the tender documents submitted.

12.2 The Tenderer shall furnish in the Form of Tender information on commissions and gratuities, if any, paid or to be paid to agents or any other party relating to this Tender.

13. Alternative Tenders.

13.1 Unless otherwise specified in the TDS, alternative Tenders shall not be considered.

13.2 When alternative times for completion are explicitly invited, a statement to that effect will be included in the **TDS**, and the method of evaluating different alternative times for completion will be described in Section III, Evaluation and Qualification Criteria.

13.3 Except as provided under ITT13.4 below, Tenderers wishing to offer technical alternatives to the requirements of the Tender Documents must first price the Procuring Entity's design as described in the Tender Documents and shall further provide all information necessary for a complete evaluation of the alternative by the Procuring Entity, including drawings, design calculations, technicalspecifications, breakdown of prices, and proposed construction methodology and other relevant details. Only the technical alternatives, if any, of the Tenderer with the Winning Tender conforming to the basic technical requirements shall be considered by the Procuring Entity.

13.4 When specified in the **TDS**, Tenderers are permitted to submit alternative technical solutions for specified parts of the Works, and such parts will be identified in the **TDS**, as will the method for their evaluating, and described in Section VII, Works' Requirements.

14. Tender Prices and Discounts.

14.1 The prices and discounts (including any price reduction) quoted by the Tenderer in the Form of Tender and in the Bill of Quantities shall conform to the requirements specified below.

14.2 The Tenderer shall fill in rates and prices for all items of the Works described in the Bill of Quantities. Items against which no rate or price is entered by the Tenderer shall be deemed covered by the rates for other items in the Bill of Quantities and will not be paid for separately by the Procuring Entity. An item not listed in the priced Bill of Quantities shall be assumed to be not included in the Tender, and provided that the Tender is determined substantially responsive notwithstanding this omission, the average price of the item quoted by substantially responsive Tenderers will be added to the Tender price and the equivalent total cost of the Tender so determined will be used for price comparison.

14.3 The price to be quoted in the Form of Tender, in accordance with ITT 12, shall be the total price of the Tender, including any discounts offered.

14.4 The Tenderer shall quote any discounts and the methodology for their application in the Form of Tender, in accordance with ITT 12

14.5 It will be specified in the **TDS** if the rates and prices quoted by the Tenderer are or are not subject to adjustment during the performance of the Contract in accordance with the provisions of the Conditions of Contract, except in cases where the contract is subject to fluctuations and adjustments, not fixed price. In such a case, the Tenderer shall furnish the indices and weightings for the price adjustment formulae in the Schedule of Adjustment Data and the Procuring Entity may require the Tenderer to justify its proposed indices and weightings.

14.6 Where tenders are being invited for individual lots (contracts) or for any combination of lots (packages), tenderers wishing to offer discounts for the award of more than one Contract shall specify in their Tender the price reductions applicable to each package, or alternatively, to individual Contracts within the package. Discounts shall be submitted in accordance with ITT 14.4, provided the Tenders for all lots (contracts) are opened at the same time.

14.7 All duties, taxes, and other levies payable by the Contractor under the Contract, or for any other cause, as of the date 30 days prior to the deadline for submission of Tenders, shall be included in the rates and prices and the total Tender Price submitted by the Tenderer.

15. Currencies of Tender and Payment.

15.1 The currency (ies) of the Tender and the currency (ies) of payments shall be the same**.**

15.2 Tenderers shall quote entirely in Kenya Shillings. The unit rates and the prices shall be quoted by the Tenderer in the Bill of Quantities, entirely in Kenya shillings

a) A Tenderer expecting to incur expenditures in other currencies for inputs to the Works supplied from

outside Kenya (referred to as "the foreign currency requirements") shall (if so allowed in the **TDS**) indicate in the Appendix to Tender the percentage(s) of the Tender Price (excluding Provisional Sums), needed by the Tenderer for the payment of such foreign currency requirements, limited to no more than two foreign currencies.

b) The rates of exchange to be used by the Tenderer in arriving at the local currency equivalent and the percentage(s) mentioned in (a) above shall be specified by the Tenderer in the Appendix to Tender and shall be based on the exchange rate provided by the Central Bank of Kenya on the date 30 days prior to the actual date of tender opening. Such exchange rate shall apply for all foreign payments under the Contract.

15.3 Tenderers may be required by the Procuring Entity to justify, to the Procuring Entity's satisfaction, their local and foreign currency requirements, and to substantiate that the amounts included in the unit rates and prices and shown in the Schedule of Adjustment Data in the Appendix to Tender are reasonable, in which case a detailed breakdown of the foreign currency requirements shall be provided by Tenderers.

16. Documents Comprising the Technical Proposal.

The Tenderer shall furnish a technical proposal including a statement of work methods, equipment, personnel, schedule and any other information as stipulated in Section IV, Tender Forms, insufficient detail to demonstrate the adequacy of the Tenderer's proposal to meet the work's requirements and the completion time.

17. Documents Establishing the Eligibility and Qualifications of the Tenderer.

17.1 Tenderers shall complete the Form of Tender, included in Section IV, Tender Forms, to establish Tenderer's eligibility in accordance with ITT 4.

17.2 In accordance with Section III, Evaluation and Qualification Criteria, to establish its qualifications to perform the Contract the Tenderer shall provide the information requested in the corresponding information sheets included in Section IV, Tender Forms.

17.3 If a margin of preference applies as specified in accordance with ITT33. 1, national tenderers, individually or in joint ventures, applying for eligibility for national preference shall supply all information required to satisfy the criteria for eligibility specified in accordance with ITT 33.1.

17.4 Tenderers shall be asked to provide, as part of the data for qualification, such information, including details of ownership, as shall be required to determine whether, according to the classification established by the Procuring Entity, a particular contract or group of contractors qualifies for a margin of preference. Further the information will enable the Procuring Entity identify any actual or potential conflict of interest in relation to the procurement and/or contract management processes, or possibility of collusion between tenderers, and thereby help to prevent any corrupt influence in relation to the procurement process or contract management.

17.5 The purpose of the information described **in ITT 17.2** above overrides any claims to confidentiality which a tenderer may have. There can be no circumstances in which it would be justified for a tenderer to keep information relating to its ownership and control confidential where it is tendering to undertake public sector work and receive public sector funds. Thus, confidentiality will not be accepted by the Procuring Entity as a justification for a Tenderer's failure to disclose, or failure to provide required information on its ownership and control.

17.6 The Tenderer shall provide further documentary proof, information or authorizations that the Procuring Entity may request in relation to ownership and control which information on any changes to the information which was provided by the tenderer under ITT 6.4. The obligations to require this information shall continue for the duration of the procurement process and contract performance and after completion of the contract, if any change to the information previously provided may reveal a conflict of interest in relation to the award or management of the contract.

17.7 All information provided by the tenderer pursuant to these requirements must be complete, current and accurate as at the date of provision to the Procuring Entity. In submitting the information required pursuant to these requirements, the Tenderer shall warrant that the information submitted is complete, current and accurate as at the date of submission to the Procuring Entity.

17.8 If a tenderer fails to submit the information required by these requirements, its tenderer will be rejected. Similarly, if the Procuring Entity is unable, after taking reasonable steps, to verify to a reasonable degree the information submitted by a tenderer pursuant to these requirements, then the tender will be rejected.

17.9 If information submitted by a tenderer pursuant to these requirements, or obtained by the Procuring Entity (whether through its own enquiries, through notification by the public or otherwise), shows any conflict of interest which could materially and improperly benefit the tenderer in relation to the procurement or contract management process, then:

i) If the procurement process is still on going, the tenderer will be disqualified from the procurement process,
ii) If the contract has been awarded to that tenderer, the contract award will be set aside,
iii) the tenderer will be referred to the relevant law enforcement authorities for investigation of whether the tenderer or any other persons have committed any criminal offence.

17.10 If a tenderer submits information pursuant to these requirements that is incomplete, inaccurate or out-of-date, or attempts to obstruct the verification process, then the consequences ITT 17.8 will ensue unless the tenderer can show to the reasonable satisfaction of the Procuring Entity that any such act was not material, or was due to genuine error which was not attributable to the intentional act, negligence or recklessness of the tender.

18. Period of Validity of Tenders.

18.1 Tenders shall remain valid for the Tender Validity period specified in the TDS. The Tender Validity period starts from the date fixed for the Tender submission deadline (as prescribed by the Procuring Entity in accordance with ITT 22). A Tender valid for a shorter period shall be rejected by the Procuring Entity as non-responsive.

18.2 In exceptional circumstances, prior to the expiration of the Tender validity period, the Procuring Entity may request Tenderers to extend the period of validity of their Tenders. The request and the responses shall be made in writing. If a Tender Security is requested in accordance with ITT 19, it shall also be extended for thirty (30) days beyond the deadline of the extended validity period. A Tenderer may refuse the request without forfeiting its Tender security. A Tenderer granting their quest shall not be required or permitted to modify its Tender.

19. Tender Security.

19.1 The Tenderer shall furnish as part of its Tender, either a Tender-Securing Declaration or a Tender Security as specified in the **TDS**, in original form and, in the case of a Tender Security, in the amount and currency **specified in the TDS**. A Tender-Securing Declaration shall use the form included in Section IV, Tender Forms.

19.2 If a Tender Security is specified pursuant to ITT19.1, the Tender Security shall be a demand guarantee in any of the following forms at the Tenderer's option:

a) cash;
b) a bank guarantee;
c) a guarantee by an insurance company registered and licensed by the Insurance Regulatory Authority listed by the Authority; or
d) a guarantee issued by a financial institution approved and licensed by the Central Bank of Kenya, from a reputable source, and an eligible country.

19.3 If an unconditional bank guarantee is issued by a bank located outside Kenya, the issuing bank shall have a correspondent bank located in Kenya to make it enforceable. The Tender Security shall be valid for thirty (30) days beyond the original validity period of the Tender, or beyond any period of extension if requested under ITT 18.2.

19.4 If a Tender Security or Tender-Securing Declaration is specified pursuant to ITT 19.1, any Tender not accompanied by a substantially responsive Tender Security or Tender-Securing Declaration shall be rejected by the Procuring Entity as non-responsive.

19.5 If a Tender Security is specified pursuant to ITT 19.1, the Tender Security of unsuccessful Tenderers shall be returned as promptly as possible upon the successful Tenderer's signing the Contract and furnishing the Performance Security and any other documents required in the TDS.The Procuring Entity shall also promptly return the tender security to the tenderers where the procurement proceedings are terminated, all tenders were determined non-responsive or a bidder declines to extend tender validity period.

19.6 The Tender Security of the successful Tenderer shall be returned as promptly as possible once the successful Tenderer has signed the Contract and furnished the required Performance Security, and any other documents required in the TDS.

19.7 The Tender Security may be forfeited or the Tender-Securing Declaration executed:

a) if a Tenderer withdraws its Tender during the period of Tender validity specified by the Tenderer on the Form of Tender, or any extension there to provided by the Tenderer; or

b) if the successful Tenderer fails to:

i) sign the Contract in accordance with ITT 47; or

ii) Furnish a Performance Security and if required in the TDS, and any other documents required in the TDS.

19.8 Where tender securing declaration is executed, the Procuring Entity shall recommend to the PPRA that PPRA debars the Tenderer from participating in public procurement as provided in the law.

19.9 The Tender Security or the Tender-Securing Declaration of a JV shall be in the name of the JV that submits the Tender. If the JV has not been legally constituted into a legally enforceable JV at the time of tendering, the Tender SecurityortheTender-Securing Declaration shall be in the names of all future members as named in the letter of intent referred to in ITT 4.1 and ITT 11.2.

19.10 A tenderer shall not issue a tender security to guarantee itself.

20. Format and Signing of Tender.

20.1 The Tenderer shall prepare one original of the documents comprising the Tender as described in ITT 11 and clearly mark it "ORIGINAL." Alternative Tenders, if permitted in accordance with ITT 13, shall be clearly marked "ALTERNATIVE." Inaddition, the Tenderer shall submit copies of the Tender, in the number **specified in the TDS** and clearly mark them "COPY." In the event of any discrepancy between the original and the copies, the original shall prevail.

20.2 Tenderers shall mark as "CONFIDENTIAL" all information in their Tenders which is confidential to their business. This may include proprietary information, trade secrets, or commercial or financially sensitive information.

20.3 The original and all copies of the Tender shall be typed or written in indelible ink and shall besigned by a person duly authorized to sign on behalf of the Tenderer. This authorization shall consist of a written confirmation as specified in the **TDS** and shall be attached to the Tender. The name and position held bye ach person signing the authorization must be typed or printed below the signature. All pages of the Tender where entries or amendments have been made shall be signed or initialed by the person signing the Tender.

20.4 In case the Tenderer is a JV, the Tender shall be signed by an authorized representative of the JV on behalf of the JV, and so as to be legally binding on all the members as evidenced by a power of attorney signed by their legally authorized representatives.

20.5 Any inter-lineation, erasures, or overwriting shall be valid only if they are signed or initialed by the person signing the Tender.

D. SUBMISSION AND OPENING OF TENDERS

21. Sealing and Marking of Tenders.

21.1 The Tenderer shall deliver the Tender in a single sealed envelope, or in a single sealed package, or in a single sealed container bearing the name and Reference number of the Tender, addressed to the Procuring Entity and a warning not to open before the time and date for Tender opening date. Within the single envelope, package or container, the Tenderer shall place the following separate, sealed envelopes:

a) in an envelope or package or container marked "ORIGINAL", all documents comprising the Tender, as describedinITT11; and

b) in an envelope or package or container marked "COPIES" all required copies of the Tender; and

c) if alternative Tenders are permitted in accordance with ITT 13, and if relevant:

i) in an envelope or package or container marked "ORIGINAL - ALTERNATIVE TENDER", the alternative Tender; and

ii) in the envelope or package or container marked "COPIES-ALTERNATIVE TENDER", all required copies of the alternative Tender.

The inner envelopes or packages or containers shall:

a Bear the name and address of the Procuring Entity.
b Bear the name and address of the Tenderer; and
c Bear the name and Reference number of the Tender.

21.2 If an envelope or package or container is not sealed and marked as required, the *Procuring Entity* will assume no responsibility for the misplacement or premature opening of the Tender. Tenders that were misplaced or opened prematurely will not be accepted.

22. Deadline for Submission of Tenders.

22.1 Tenders must be received by the Procuring Entity at the address specified in the **TDS** and no later than the date and time also specified in the **TDS.** When so specified in the **TDS**, Tenderers shall have the option of submitting their Tenders electronically. Tenderers submitting Tenders electronically shall follow the electronic Tender submission procedures specified in the **TDS**.

22.2 The Procuring Entity may, at its discretion, extend the deadline for the submission of Tenders by amending the Tender Documents in accordance with ITT 8, in which case all rights and obligations of the Procuring Entity and Tenderers previously subject to the deadline shall thereafter be subject to the deadline as extended.

23. Late Tenders.

The Procuring Entity shall not considerany Tender that arrives after the deadline for submission of tenders, in accordance with ITT 22. Any Tender received by the Procuring Entity after the deadline for submission of Tenders shall be declared late, rejected, and returned unopened to the Tenderer.

24. Withdrawal, Substitution, and Modification of Tenders

24.1 A Tenderer may withdraw, substitute, or modify its Tender after it has been submitted by sending a written notice, duly signed by an authorized representative, and shall include a copy of the authorization in accordance with ITT 20.3, (except that withdrawal notices do not require copies). The corresponding substitution or modification of the Tender must accompany the respective written notice. All notices must be:

a) prepared and submitted in accordance with ITT 20 and ITT 21 (except that withdrawals notices do not require copies), and in addition, the respective envelopes shall be clearly marked "WITHDRAWAL," "SUBSTITUTION," "MODIFICATION;"and

b) received by the Procuring Entity prior to the deadline prescribed for submission of Tenders, in accordance with ITT 22.

24.2 Tenders requested to be withdrawn in accordance with ITT 24.1 shall be returned unopened to theTenderers.

24.3 No Tender may be withdrawn, substituted, or modified in the interval between the deadline for submission of Tenders and the expiration of the period of Tender validity specified by the Tenderer on the Form of Tender or any extension thereof.

25. Tender Opening.

25.1 Except in the cases specified in ITT 23 and ITT 24.2, the Procuring Entity shall publicly open and read out all Tenders received by the deadline, at the date, time and place specified **in the TDS**, in the presence of Tenderers' designated representatives and anyone who chooses to attend. Any specific electronic Tender opening procedures required if electronic Tendering is permitted in accordance with ITT 22.1, shall be as specified in the **TDS.**

25.2 First, envelopes marked "WITHDRAWAL" shall be opened and read out and the envelopes with the corresponding Tender shall not be opened but returned to the Tenderer. No Tender withdrawal shall be permitted unless the corresponding withdrawal notice contains a valid authorization to request the withdrawal and is read out attender opening.

25.3 Next, envelopes marked "SUBSTITUTION" shall be opened and read out and exchanged with the corresponding Tender being substituted, and the substituted Tender shall not be opened, but returned to the Tenderer. No Tender substitution shall be permitted unless the corresponding substitution notice contains a valid authorization to request the substitution and is read out at Tender opening.

25.4 Next, envelopes marked “MODIFICATION” shall be opened and read out with the corresponding Tender.No Tender modification shall be permitted unless the corresponding modification notice contains a valid authorization to request the modification and is read out at Tender opening.

25.5 Next, all remaining envelopes shall be opened on eata time, reading out: the name of the Tenderer and whether there is a modification; the total Tender Price, per lot (contract) if applicable, including any discounts and alternative Tenders; the presence or absence of a Tender Security or Tender-Securing Declaration, if required; and any other details as the Procuring Entity may consider appropriate.

25.6 Only Tenders, alternative Tenders and discounts that are opened and read out at Tender opening shall be considered further for evaluation. The Form of Tender and pages of the Bill of Quantities (to be decided on by the tender opening committee) are to be initialed by the members of the tender opening committee attending the opening.

25.7 At the Tender Opening, the Procuring Entity shall neither discuss the merits of any Tender nor reject any Tender (except for late Tenders, in accordance with ITT 23.1).

25.8 The Procuring Entity shall prepare minutes of the Tender Opening that shall include, as a minimum:

a) The name of the Tenderer and whether there is a withdrawal, substitution, or modification;
b) The Tender Price, per lot (contract) if applicable, including any discounts;
c) any alternative Tenders;
d) the presence or absence of a Tender Security, if one was required.
e) number of pages of each tender document submitted.

25.9 The Tenderers' representatives who are present shall be requested to sign the minutes. The omission of a Tenderer's signature on the minutes shall not invalidate the contents and effect of the minutes. A copy of tender opening register shall be issued to a tenderer upon request.

E. EVALUATION AND COMPARISON OF TENDERS.

26. Confidentiality.

26.1 Information relating to the evaluation of Tenders and recommendation of contract award shall not be disclosed to Tenderers or any other persons not officially concerned with the Tender process until information on Intention to Award the Contract is transmitted to all Tenderers in accordance with ITT 43.

26.2 Any effort by a Tenderer to influence the Procuring Entity in the evaluation of the Tenders or Contract award decisions may result in the rejection of its tender.

26.3 Notwithstanding ITT 26.2, from the time of tender opening to the time of contract award, if a tenderer wishes to contact the Procuring Entity on any matter related to the tendering process, it shall do so in writing.

27. Clarification of Tenders

27.1 To assist in the examination, evaluation, and comparison of the tenders, and qualification of the tenderers, the Procuring Entity may, at its discretion, ask any tenderer for a clarification of its tender, given a reasonable time for a response. Any clarification submitted by a tenderer that is not in response to a request by the Procuring Entity shall not be considered. The Procuring Entity's request for clarification and the response shall be in writing. No change, including any voluntary increase or decrease, in the prices or substance of the tender shall be sought, offered, or permitted, except to confirm the correction of arithmetic errors discovered by the Procuring Entity in the evaluation of the tenders, in accordance with ITT 31.

27.2 If a tenderer does not provide clarifications of its tender by the date and time set in the Procuring Entity's request for clarification, its Tender may be rejected.

28. Deviations, Reservations, and Omissions.

28.1 During the evaluation of tenders, the following definitions apply:

a) “Deviation” is a departure from the requirements specified in the tender document;

b) "Reservation" is the setting of limiting conditions or withholding from complete acceptance of the requirements specified in the tender document; and

c) "Omission" is the failure to submit part or all of the information or documentation required in the Tender document.

29. Determination of Responsiveness.

29.1 The Procuring Entity's determination of a Tender's responsiveness is to be based on the contents of thetender itself, as defined in ITT 11.

29.2 A substantially responsive Tender is one that meets the requirements of the Tender document without material deviation, reservation, or omission. A material deviation, reservation, or omission is one that, if accepted, would:

a) Affect in any substantial way the scope, quality, or performance of the Works specified in the Contract; or

b) limit in any substantial way, inconsistent with the tender document, the Procuring Entity's rights or the tenderer's obligations under the proposed contract; or

c) if rectified, would unfairly affect the competitive position of other tenderers presenting substantially responsive tenders.

29.3 The Procuring Entity shall examine the technical aspects of the tender submitted in accordance with ITT 16, to confirm that all requirements of Section VII, Works' Requirements have been met without any material deviation, reservation or omission.

29.4 If a tender is not substantially responsive to the requirements of the tender document, it shall be rejected by the Procuring Entity and may not subsequently be made responsive by correction of the material deviation, reservation, or omission.

30. Non-material Non-conformities.

30.1 Provided that a tender is substantially responsive, the Procuring Entity may waive any non-conformities in the tender.

30.2 Provided that a Tender is substantially responsive, the Procuring Entity may request that the tenderer submit the necessary information or documentation, within a reasonable period of time, to rectify nonmaterial non-conformities in the tender related to documentation requirements. Requesting information or documentationon such non-conformities shall not be related to any aspect of the price of the tender. Failure of the tenderer to comply with the request may result in the rejection of its tender.

30.3 Provided that a tender is substantially responsive, the Procuring Entity shall rectify quantifiable nonmaterial non-conformities related to the Tender Price. To this effect, the Tender Price shall be adjusted, for comparison purposes only, to reflect the price of a missing or non-conforming item or component in the manner specified **in the TDS.**

31. Arithmetical Errors.

31.1 The tender sum as submitted and read out during the tender opening shall be absolute and final and shall not be the subject of correction, adjustment or amendment in anyway by any person or entity.

31.2 Provided that the Tender is substantially responsive, the Procuring Entity shall handle errors on the following basis:

a) Any error detected if considered a major deviation that affects the substance of the tender, shall lead to disqualification of the tender as non-responsive.

b) Any errors in the submitted tender arising from a miscalculation of unit price, quantity, sub total and total bid price shall be considered as a major deviation that affects the substance of the tender and shall lead to disqualification of the tender as non-responsive. and

c) If there is a discrepancy between words and figures, the amount in words shall prevail

31.3 Tenderers shall be notified of any error detected in their bid during the notification of award.

32. Conversion to Single Currency.

For evaluation and comparison purposes, the currency (ies) of the Tender shall be converted into a single currency as specified in the TDS.

33. Margin of Preference and Reservations.

33.1 A margin of preference may be allowed only when the contract is open to international competitive tendering where foreign contractors are expected to participate in the tendering process and where the contract exceeds the value/threshold specified in the Regulations.

33.2 A margin of preference shall not be allowed unless it is specified so in the **TDS**.

33.3 Contracts procured on basis of international competitive tendering shall not be subject to reservations exclusive to specific groups as provided in ITT 33.4.

33.4 Where it is intended to reserve a contract to a specific group of businesses (these groups are Small and Medium Enterprises, Women Enterprises, Youth Enterprises and Enterprises of persons living with disability, as the case may be), and who are appropriately registered as such by the authority to be specified in the **TDS**, a procuring entity shall ensure that the invitation to tender specifically indicates that only businesses or firms belonging to the specified group are eligible to tender. No tender shall be reserved to more than one group. If not so stated in the Invitation to Tender and in the Tender documents, the invitation to tender will be open to all interested tenderers.

34. Nominated Subcontractors.

34.1 **Unless** otherwise stated **in the TDS,** the Procuring Entity does not intend to execute any specific elements of the Works by subcontractors selected/nominated by the Procuring Entity. Incase the Procuring Entity nominates a subcontractor, the subcontract agreement shall be signed by the Subcontractor and the Procuring Entity. The main contract shall specify the working arrangements between the main contractor and the nominated subcontractor.

34.2 Tenderers may propose subcontracting upto the percentage of total value of contracts or the volume of works as specified **in the TDS**. Subcontractors proposed by the Tenderer shall be fully qualified for their parts of the Works.

34.3 Domestic subcontractor's qualifications shall not be used by the Tenderer to qualify for the Works unless their specialized parts of the Works were previously designated so by the Procuring Entity **in the TDS** as can be met by subcontractors referred to hereafter as 'Specialized Subcontractors', in which case, the qualifications of the Specialized Subcontractors proposed by the Tenderer may be added to the qualifications of the Tenderer.

35. Evaluation of Tenders.

35.1 The Procuring Entity shall use the criteria and methodologies listed in this ITT and Section III, Evaluation and Qualification Criteria. No other evaluation criteria or methodologies shall be permitted. By applying the criteria and methodologies the Procuring Entity shall determine the Lowest Evaluated Tender in accordance with ITT 40.

35.2 To evaluate a Tender, the Procuring Entity shall consider thefollowing:

a) Price adjustment in accordance with ITT 31.1(iii); excluding provisional sums and contingencies, if any, but including Day work items, where priced competitively;

b) Price adjustment due to discounts offered in accordance with ITT 14.4;

c) converting the amount resulting from applying (a) and (b) above, if relevant, to a single currency in accordance with ITT 32;

d) price adjustment due to quantifiable non material non-conformities in accordance with ITT 30.3; and

e) any additional evaluation factors specified **in the TDS** and Section III, Evaluation and Qualification Criteria.

35.3 The estimated effect of the price adjustment provisions of the Conditions of Contract, applied over the period of execution of the Contract, shall not be considered intender evaluation.

35.4 Where the tender involves multiple lots or contracts, the tenderer will be allowed to tender for one or more lots (contracts). Each lot or contract will be evaluated in accordance with ITT 35.2. The methodology to determine the lowest evaluated tenderer or tenderers based one lot (contract) or based on a combination of lots (contracts), will be specified in Section III, Evaluation and Qualification Criteria. In the case of multiple lots or contracts, tenderer will be will be required to prepare the Eligibility and Qualification Criteria Form for each Lot.

36. Comparison of Tenders.

The Procuring Entity shall compare the evaluated costs of all substantially responsive Tenders established in accordance with ITT 35.2 to determine the Tender that has the lowest evaluated cost.

37. Abnormally Low Tenders and Abnormally High Tenders Abnormally Low Tenders.

37.1 An Abnormally Low Tender is one where the Tender price, in combination with other elements of the Tender, appears so low that it raises material concerns as to the capability of the Tenderer in regards to the Tenderer's ability to perform the Contract for the offered Tender Price or that genuine competition between Tenderers is compromised.

37.2 In the event of identification of a potentially Abnormally Low Tender, the Procuring Entity shall seek written clarifications from the Tenderer, including detailed price analyses of its Tender price in relation to the subject matter of the contract, scope, proposed methodology, schedule, allocation of risks and responsibilities and any other requirements of the Tender document.

37.3 After evaluation of the price analyses, in the event that the Procuring Entity determines that the Tenderer has failed to demonstrate its capability to perform the Contract for the offered Tender Price, the Procuring Entity shall reject the Tender.

Abnormally High Tenders.

37.4 An abnormally high tender price is one where the tender price, in combination with other constituent elements of the Tender, appears unreasonably too high to the extent that the Procuring Entity is concerned that it (the Procuring Entity) may not be getting value for money or it may be paying too high a price for the contract compared with market prices or that genuine competition between Tenderers is compromised.

37.5 Incase of an abnormally high price, the Procuring Entity shall make a survey of the market prices, check if the estimated cost of the contract is correct and review the Tender Documents to check if the specifications, scope of work and conditions of contract are contributory to the abnormally high tenders. The Procuring Entity may also seek written clarification from the tenderer on the reason for the high tender price. The Procuring Entity shall proceed as follows:

a) If the tender price is abnormally high based on wrong estimated cost of the contract, the Procuring Entity may accept or not accept the tender depending on the Procuring Entity's budget considerations.

b) If specifications, scope of work and/or conditions of contract are contributory to the abnormally high tender prices, the Procuring Entity shall reject all tenders and may retender for the contract based on revised estimates, specifications, scope of work and conditions of contract, as the case may be.

37.6 If the Procuring Entity determines that the Tender Price is abnormally too high because genuine competition between tenderers is compromised (*often due to collusion, corruption or other manipulations*), the Procuring Entity shall reject all Tenders and shall institute or cause competent Government Agencies to institute an investigation on the cause of the compromise, before retendering.

38. Unbalanced and/or Front-Loaded Tenders.

38.1 If in the Procuring Entity's opinion, the Tender that is evaluated as the lowest evaluated price is seriously unbalanced and/or front loaded, the Procuring Entity may require the Tenderer to provide written clarifications. Clarifications may include detailed price analyses to demonstrate the consistency of the tender prices with the scope of works, proposed methodology, schedule and any other requirements of the Tender document.

38.2 After the evaluation of the information and detailed price analyses presented by the Tenderer, the Procuring Entitymayasappropriate:

a) accept the Tender; or

b) require that the total amount of the Performance Security be increased at the expense of the Tenderer to a level not exceeding a 10% of the Contract Price; or

c) agree on a payment mode that eliminates the inherent risk of the Procuring Entity paying too much for undelivered works; or

d) reject the Tender.

39. Qualifications of the Tenderer.

39.1 The Procuring Entity shall determine to its satisfaction whether the eligible Tenderer that is selected as having submitted the lowest evaluated cost and substantially responsive Tender, meets the qualifying criteria specified in Section III, Evaluation and Qualification Criteria.

39.2 The determination shall be based upon an examination of the documentary evidence of the Tenderer's qualifications submitted by the Tenderer, pursuant to ITT 17. The determination shall not take into consideration the qualifications of other firms such as the Tenderer's subsidiaries, parent entities, affiliates, subcontractors (other than Specialized Subcontractors if permitted in the Tender document), or any other firm(s) different from the Tenderer.

39.3 An affirmative determination shall be a prerequisite for award of the Contract to the Tenderer. A negative determination shall result in disqualification of the Tender, in which event the Procuring Entity shall proceed to the Tenderer who offers a substantially responsive Tender with the next lowest evaluated price to make a similar determination of that Tenderer's qualifications to perform satisfactorily.

40. Lowest Evaluated Tender.

Having compared the evaluated prices of Tenders, the Procuring Entity shall determine the Lowest Evaluated Tender. The Lowest Evaluated Tender is the Tender of the Tenderer that meets the Qualification Criteria and whose Tender has been determined to be:

a) Most responsive to the Tender document; and

b) The lowest evaluated price.

41. Procuring Entity's Right to Accept Any Tender, and to Reject Any or All Tenders.

The Procuring Entity reserves the right to accept or reject any Tender and to annul the Tender process and reject all Tenders at any time prior to Contract Award, without there by incurring any liability to Tenderers. Incase of annulment, all Tenders submitted and specifically, Tender securities, shall be promptly returned to the Tenderers.

F. AWARD OF CONTRACT

42. Award Criteria.

The Procuring Entity shall award the Contract to the successful tenderer whose tender has been determined to be the Lowest Evaluated Tender**.**

43. Notice of Intention to enter into a Contract.

Upon award of the contract and Prior to the expiry of the Tender Validity Period the Procuring Entity shall issue a Notification of Intention to Enter into a Contract/Notification of award to all tenderers which shall contain, at a minimum, the following information:

a) the name and address of the Tenderer submitting the successful tender;

b) The Contract price of the successful tender;

c) A statement of the reason(s) the tender of the unsuccessful tenderer to whom the letter is addressed was unsuccessful, unless the price information in (c) above already reveals the reason;

d) The expiry date of the Standstill Period; and

e) Instructions on how to request a debriefing and/or submit a complaint during the stand still period;

44. Stand still Period.

44.1 The Contract shall not be signed earlier than the expiry of a Standstill Period of 14 days to allow any dissatisfied tender to launch a complaint. Where only one Tender is submitted, the Standstill Period shall not apply.

44.2 Where a Standstill Period applies, it shall commence when the Procuring Entity has transmitted to eachTenderer the Notification of Intention to Enter into a Contract with the successful Tenderer.

45. Debriefing by the Procuring Entity.

45.1 On receipt of the Procuring Entity's Notification of Intention to Enter into a Contract referred to in ITT 43, an unsuccessful tenderer may make a concerns regarding their tender. The Procuring Entity shall provide the debriefing within five days of receipt of the request.

45.2 Debriefings of unsuccessful Tenderers may be done in writing or verbally. The Tenderer shall bear its own costs of attending such a debriefing meeting.

46. Letter of Award.

Prior to the expiry of the Tender Validity Period and upon expiry of the Standstill Period specifiedin ITT 42.1, upon addressing a complaint that has been filed within the Standstill Period, the Procuring Entity shall transmit the Letter of Award to the successful Tenderer. The letter of award shall request the successful tenderer to furnish the Performance Security within 21 days of the date of the letter.

47. Signing of Contract.

47.1 Upon the expiry of the fourteen days of the Notification of Intention to enter into contract and upon the parties meeting their respective statutory requirements, the Procuring Entity shall send the successful Tenderer the Contract Agreement.

47.2 Within fourteen (14) days of receipt of the Contract Agreement, the successful Tenderer shall sign, date, and return it to the Procuring Entity.

47.3 The written contract shall be entered into within the period specified in the notification of award and before expiry of the tender validity period.

48. Performance Security.

48.1 Within twenty-one (21) days of the receipt of the Letter of Award from the Procuring Entity, the successful Tenderer shall furnish the Performance Security and, any other documents required in the **TDS**, in accordance with the General Conditions of Contract, subject to ITT 38.2 (b), using the Performance Security and other Forms included in Section X, Contract Forms, or another form acceptable to the Procuring Entity. A foreign institution providing a bank guarantee shall have a correspondent financial institution located in Kenya, unless the Procuring Entity has agreed in writing that a correspondent bank is not required.

48.2 Failure of the successful Tenderer to submit the above-mentioned Performance Security and other documents required in the**TDS** or sign the Contract shall constitute sufficient grounds for the annulment of the award and forfeiture of the Tender Security. In that event the Procuring Entity may award the Contract to the Tenderer offering the next Best Evaluated Tender.

48.3 Performance security shall not be required for contract sestimated to cost less than the amount specified in the Regulations.

49. Publication of Procurement Contract.

Within fourteen days after signing the contract, the Procuring Entity shall publish the awarded contract at its notice boards and websites; and on the Website of the Authority. At the minimum, the notice shall containthe following information:

a) Name and address of the Procuring Entity;

b) Name and reference number of the contract being awarded, a summary of its scope and the selection method used;

c) The name of the successful Tenderer, the final total contract price, the contract duration.

d) Dates of signature, commencement and completion of contract;

e) Names of all Tenderers that submitted Tenders, and their Tender prices as read out at Tender opening.

50. Procurement Related Complaint

The procedures for making Procurement-related Complaints shall be specified in the TDS.

SECTION II-TENDER DATA SHEET (TDS)

The following specific data shall complement, supplement, or amend the provisions in the Instructions to Tenderers (ITT). Whenever there is a conflict, the provisions herein shall prevail over those in ITT

A GENERAL:	
ITT 1.1	**The Name of the Contract is:** …… The reference number of the contract is: **KeRRA/……**
ITT 2.3	The information made available on competing firms is as follows: **as indicated in ITT and qualification criteria.**
ITT 2.4	The firms that provided consulting services for the contract being tendred for are: ….. ***NA*……**
ITT 3.1	Maximum number of memebers in the joint venture(JV): Shall be: ……**Two (*2*)……**
B CONTENT OF TENDER DOCUMENT:	
ITT 7.1	1. The tenderer will submit any request for clarification in writing at the address: **The Regional Director,** **Kenya Rural Roads Authority,** **P.O. Box 1391– 70100,** **GARISSA, KENYA.** To reach the procuring entity not later than……. 2. The procuring entity will publish its responses at the website: **https://www.kerra.go.ke**
ITT 7.2	A pre- arranged pretender site visit shall not take place due to covid pandemic
ITT 7.3	TheTenderer will submit any questions in writing, to reach the Procuring Entity not later than Not less than 7days before opening date.
ITT 7.5	The Procuring Entity's website where Minutes of the pre-Tender meeting and the pre- arranged pretender will be published is **https://www.kerra.go.ke**
19.2 (h)	The other security **is *NA***
C. PREPARATION OF TENDERS:	
ITP 11.1(h)	The Tenderer shall submit the following additional documents in its Tender: *[list any additional document not already listed in ITT 11.1 that must be submitted with the Tender. The list of additional documents should include the following:]* ***is included in the bid document.***
ITT 13.1	Alternative Tenders *["**Shall Not be"}*** considered.
ITT 13.2	Alternative times for completion *["**Shall be"}" permitted.***
ITT 13.4	Alternative technical solutions shall be permitted for the following parts of the Works: ***Not permited.***
ITT 14.5	The rates quoted by the Tenderer shall be: ***Fixed.***
ITT15.2	Foreign currency requirement :(*allowed/not allowed*)**: *Not allowed.***
ITT 18.1	The Tender validity period shall be **140 days** *[insert a number of days that is amultiple of seven counting as of the deadline for Tender submission}* days.
ITT 18.3	a) The Number of days beyond the expiry of the initial tender validity period will be 30 days. (b) The Tender price shall be adjusted by the following percentages of the tender price: *(i)* By *N/A*% of *the local currency portion of the Contract price adjusted to reflect local inflation during the period ofextension,and by N/A*__*% the foreign currency portion of the Contract price adjusted to reflect the international inflation during the period ofextension.*

ITT 19.1	A Tender Security…… **Shall be required / Shall not be required**……... ATender-SecuringDeclaration……. ***Shall be/Shall not be*……**.Required. If a Tender Security shall be required, the amount and currency of the Tender Security shall be **Ksh 200,000(Two hundred thousand).**
ITT 19.8	Other documents required are as provided for in bid documents:
ITT 19.9	The Procuring Entity will declare the Tenderer ineligible to be awarded contracts by the Procuring Entity for a period of **Two (2) years** In the event of false declaration.
ITT 20.1	In addition to the original of the Tender, the number of copies is: Two (2).
ITT 20.3	The written confirmation of authorization to sign on behalf of the Tenderer shall consist of: ***Written Power of Attorney.***
D. SUBMISSION AND OPENING OF TENDERS:	
ITT 21.3	Atender package or container that cannot fit in the tender box shall be received as follows: The tender opening committee will stipulate the procedure based on cirumstances.
ITT 22.1	1. For Tender submission purposes only, the Procuring Entity's address is: as per section ITT 7.1 above. 2. Date and time for submission of Tenders. . as per invitation to tender 3. Tenders shall (submit/shall not submit**) *shall not submit*** tenders electronically.
ITT 25.1	If Tenderers are allowed to submit Tenders electronically, they shall follow the electronic tender submission procedures **specified below** *[insert a description of the electronic Tender opening procedures}:* **……N/A……...**
ITT 25.6	The number of representatives of the Procuring Entity to sign is at least: **Two (2)**
E. EVALUATION, AND COMPARISON OF TENDERS:	
ITT 30.3	The adjustment shall be based on the **(*average)*** *[insert "average" or "highest"}* price of the item or component as quoted in other substantially responsive Tenders. If the price of the item or component cannot be derived from the price of other substantially responsive Tenders, the Procuring Entity shall use its Lowest estimate.
ITT 31.2	The error shall be considered a major deviation that leads to disqualification of the tender if the percentage of the error (error over the tender price quoted) is: **more than 15 % or less than15 %.**
ITT 32.1	The currency that shall be used for Tender evaluation and comparison purposes to convert at the selling exchange rate all Tender prices expressed in various currencies into a single currency is-: ***Kenya shillings*** The source of exchange rate shall be: **The Central bank of Kenya.** The date for the exchange rate shall *be:* **the deadline date for Submission of the Tenders.**
ITT 33.2	A margin of preference *[insert either "shall" or "shall not"]* **Shall Not** apply.
ITT 33.4	The Invitation to tender is extended to the following groups that qualify for reservations(AGPO): **…….OPEN……...**
ITT 34.1	At this time, the Procuring Entity ***(does not intend)*** to execute certain specific parts of the Works by sub contractors selected in advance.
ITT 34.2	Contractor's may propose subcontracting: Maximum percentage of subcontracting permitted s: ***NA*** *% of the total contract amount.* Tenderers planning to subcontract more than 10% of total volume of work shall specify, in the Form of Tender, the activity (ies) or parts of the Works to be subcontracted along with complete details of the subcontractors and their qualification and experience.
ITT 34.3	The parts of the Works for which the Procuring Entity permits Tenderers to propose Specialized Subcontractors are designated as follows: **NA**

	For the above-designated parts of the Works that may require Specialized Subcontractors, the relevant qualifications of the proposed Specialized Subcontractors will be added to the qualifications of the Tenderer for the purpose of evaluation.
ITT 5.2 (d)	Additional requirements apply. These are detailed in the evaluation criteria in Section III, Evaluation and Qualification Criteria ***NA***
ITT 48.2	Additional requirements are: **as provided for in the bid document.**
ITT 49.1	The procedures for making a Procurement-related Complaint are available from the **PPRA** website info@ppra.go.keor complaints@ppra.go.ke. If a Tenderer wishes to make a Procurement-related Complaint, the Tenderer should submit its complaint following these procedures, in writing (by the quickest means available, that is either by hand delivery or email to: **The Director General,** **Kenya Rural Roads Authority,** **P.O.Box 48151– 00100,** **NAIROBI, KENYA.** In summary, a Procurement-related Complaint may challenge any of the following: (i) the terms of the Tender Documents; and the Procuring Entity's decision to award the contract.

SECTION III- EVALUATION AND QUALIFICATION CRITERIA:

51. General Provisions.

1.1 This section contains the criteria that the Employer shall use to evaluate tender and qualify tenderers. No other factors, methods or criteria shall be used other than specified in this tender document. The Tenderer shall provide all the information requested in the forms included in Section IV, Tendering Forms. The Procuring Entityshall use **the Standard Tender Evaluation Document for Goods and Works** for evaluating Tenders.

1.2 Wherever a Tenderer is required to state a monetary amount, Tenderers should indicate the Kenya Shilling equivalent using the rate of exchange determined as follows:

a) For construction turnover or financial data required for each year - Exchange rate prevailing on the last day of the respective calendar year (in which the amounts for that year is to be converted) was originally established.
b) Value of single contract - Exchange rate prevailing on the date of the contract signature.
c) Exchange rates shall be taken from the publicly available source identified in the ITT 14.3. Any error in determining the exchange rates in the Tender may be corrected by the Procuring Entity.

1.3 **Evaluation and contract award Criteria**-The Procuring Entity shall use the criteria and methodologies listed in this Section to evaluate tenders and arrive at the Lowest Evaluated Tender.
The tender that:

(i) Meets the qualification criteria,
(ii) Has been determined to be substantially responsive to the Tender Documents, and
(iii) Is determined to have the Lowest Evaluated Tender price shall be selected for award of contract.

2. Preliminary examination for Determination of Responsiveness.

The Procuring Entity will start by examining all tenders to ensure they meet in all respects the eligibility criteria and other requirements in the ITT, and that the tender is complete in all aspects in meeting the requirements of *"**Part 2 – Procuring Entity's Works Requirements",*** including checking for tenders with unacceptable errors, abnormally low tenders, abnormally high tenders and tenders that are front loaded. The Standard Tender Evaluation Report for Goods and Works for evaluating Tenders provides clear guidelines on how to deal with review of these requirements. Tenders that do not pass the Preliminary Examination will be considered irresponsive and will not be considered further.

[The Procuring Entity will provide the preliminary evaluation criteria. To facilitate, a template may be attached or clearly described all information and list of documentation to be submitted by Tenderers to enable preliminary evaluation of the Tender]

3. Tender Evaluation (ITT 35)

Price evaluation: In addition to the criteria listed in ITT 35.2 (a) – (d) the following criteria shall apply:

i) **Alternative Completion Times,** if permitted under ITT 13.2, will be evaluated as follows: ……NA……

ii) **Alternative Technical Solutions** for specified parts of the Works, if permitted under ITT 13.4, will be evaluated as follows :…NA……

iii) **Other Criteria; i**f permitted under ITT 35.2(d) :……NA…….....

4. Multiple Contracts

4.1 Multiple contracts will be permitted in accordance with ITT 35.4. Tenderers are evaluated on basis of Lots and the lowest evaluated tenderer identified for each Lot. The Procuring Entity will select one Option of the two Options listed below for award of Contracts.

52. OPTION 1

i) If a tenderer wins only one Lot, the tenderer will be awarded a contract for that Lot, provided the tenderer meets the Eligibility and Qualification Criteria for that Lot.

ii) If a tenderer wins more than one Lot, the tender will be awarded contracts for all won Lots, provided the tenderer meets the aggregate Eligibility and Qualification Criteria for all the Lots. The tenderer will be

awarded the combination of Lots for which the tenderer qualifies and the others will be considered for award to second lowest the tenderers.

53. OPTION 2

The Procuring Entity will consider all possible combinations of won Lots [contract(s)] and determine the combinations with the lowest evaluated price. Tenders will then be awarded to the Tenderer or Tenderers in the combinations provided the tenderer meets the aggregate Eligibility and Qualification Criteria for all the won Lots.

5. Alternative Tenders (ITT 13.1)

An alternative if permitted under ITT 13.1, will be evaluated as follows:

The Procuring Entity shall consider Tenders offered for alternatives as specified in Part2-Works Requirements. Only the technical alternatives, if any, of the Tenderer with the Best Evaluated Tender conforming to the basic technical requirements shall be considered by the Procuring.

6. MARGIN OF PREFERENCE.

61 If the TDS so specifies, the Procuring Entity will grant a margin of preference of fifteen percent (15%) to be loaded one valuated price of the foreign tenderers, where the percentage of shareholding of Kenyan citizens is less than fifty-one percent (51%).

62 Contractors applying for such preference shall be asked to provide, as part of the data for qualification, such information, including details of ownership, as shall be required to determine whether, according to the classification established by the Procuring Entity, a particular contract or or group of contractors qualifies for a margin of preference.

63 After Tenders have been received and reviewed by the Procuring Entity, responsive Tenders shall be assessed to ascertain their percentage of shareholding of Kenyan citizens. Responsive tenders to shall be classified into the following groups:

i) GroupA: tenders offered by Kenyan Contractors and other Tenderers where Kenyan citizens hold shares of over fifty one percent (51%).

ii) GroupB: tenders offered by foreign Contractors and other Tenderers where Kenyan citizens hold shares of less than fifty one percent (51%).

64 All evaluated tenders in each group shall, as a first evaluation step, be compared to determine the lowest tender, and the lowest evaluated tender in each group shall be further compared with each other. If, as a result of this comparison, a tender from Group A is the lowest, it shall be selected for the award. If a tender from Group B is the lowest, an amount equal to the percentage indicated in Item 3.1 of the respective tender price, including unconditional discounts and excluding provisional sums and the cost of day works, if any, shall be added to the evaluated price offered in each tender from Group B. All tenders shall then be compared using new prices with added prices to Group Band the lowest evaluated tender from Group A. If the tender from Group A is still the lowest tender, it shall be selected for award. If not, the lowest evaluated tender from Group B based on the first evaluation price shall be selected.

7. Post qualification and Contract award (ITT 39), more specifically,

a) In case the tender was subject to post-qualification, the contract shall be awarded to the lowest evaluated tenderer, subject to confirmation of pre-qualification data, if so required.

b) Incase the tender was not subject to post-qualification, the tender that has been determined to be the lowest evaluated tenderer shall be considered for contract award, subject to meeting each of the following conditions.

i) The Tenderer shall demonstrate that it has access to, or has available, liquid assets, unencumbered real assets, lines of credit, and other financial means (independent of any contractual advance payment) sufficient to meet the construction cash flow of Kenya Shillings **5 million**.

ii) Minimum average annual construction turnover of Kenya Shillings ***Three (3) million*** *[insert amount]*, equivalent calculated as total certified payments received for contracts in progress and/or completed within the last ***3 years)*** *[insert of year]* years.

iii) At least **One (1)**___(*insert number)* of contract(s) of a similar nature executed within Kenya, or the East African Community or abroad, that have been satisfactorily and substantially completed as a prime contractor, or joint venture member or sub-contractor each of minimum value Kenya shillings **(One) 1 Million** equivalents.

iv) Contractor's Representative and Key Personnel, which are specified *as per the forms* _____

	The site staff shall possess minimum levels set below;
Senior Foreman/Site Agent	Qualification = H.N.D. Civil Eng. General Experience = 5 yrs Specific Experience = 3 Yrs
Site Surveyor	Qualification = H.N.D. Survey General Experience = 5 yrs Specific Experience = 2 Yrs
2 Foremen	Qualification = Dip. Civil Eng General Experience = 4 yrs Specific Experience = 2 Yrs

v) Contractors key equipment listed on the table "Contractor's Equipment" below and more specifically listed as *[specify requirements for each lot as applicable]*_____

Item No.	Equipment Details	Minimum Number Required for the Contract Execution
1	**A) General Plant** 1. Primary/Secondary Crusher Unit/Power Screen Min capacity – 60t/hr. 2. Concrete batching plant Min Cap 20 m^3/hr 3. Asphalt Concrete batching plant	 0 1 0
2	**B) Bituminous Plants** 1. Bitumen Pressure distributor 2. Asphalt concrete paver	 0 0
3	**C) Compactors** 3. Vibrating compaction plate 300 mm wide 4. Vibrating compaction plate 600 mm wide	 0 1
4	**D) Mobile Compressors** 1. Single tool (1.8 m3/min) 2. Two tool (2.8 – 7.3m3/min) 3. Four tool (11.3 – 25.3 m3/min) 4. Medium rock drill (1.5 m3/min) 5. Heavy rock drill (2.4 m3/min)	 0 0 0 2 1
5	**E) Concrete Equipment** 1. Mobile concrete mixers 2. Truck mounted mixers 3. Concrete vibrators	 2 Optional 4

Item No.	Equipment Details	Minimum Number Required for the Contract Execution
6	**F) Transport (Tippers, dumpers, water tankers)** 1. 4 x 2 tippers payload 7 – 12 tonnes 2. 6 x 4 tippers payload 16 – 20 tonnes 3. 8 x 4 tippers payload 16 – 20 tonnes 4. Articulated trailers 5. Dump trucks 6. Flat bed lorries 7. Water tankers -8,000lts capacity -12,000lts capacity	 Optional 2 Optional Optional 2 Optional 1 0
7	**G) Earth – Moving Equipment** 1. Tracked dozers with dozer attachment (D6-D9 equivalent) 2. Tracked loaders 3. Wheeled loaders 4. Motor scappers 5. Motor graders (120 - 205kW) 6. Trench excavator 7. Pulvimixer	 1 1 Optional Optional 1 0 0
8	**H) Diesel Generators** 1. Diesel generators (15 – 200Kva)	 1
9	**I) Excavators** 1. Hydraulic crawler mounted (7 – 10 tonnes) – 0.25 – 0.4 m^3 SAE bucket. 2. Hydraulic crawler mounted (10 – 16 tonnes) – 0.40 – 0.60 m3 SAE bucket. 3. Hydraulic wheel mounted (7 – 10 tonnes) – 0.25 – 0.4 m3 SAE bucket. 4. Hydraulic wheel mounted (10 – 16 tonnes) – 0.40 – 0.6 m3 SAE bucket. 5. Hydraulic wheel mounted backloader (7 – 10 tonnes) – 0.25 – 0.4 m3 SAE bucket.	 1 0 0 0 0
10	**J) Rollers** 1. Self-propelled single drum vibrating (various types) 2. Pneumatic rubber tyre (1-2 tonnes/wheel) 3. Sheep's foot roller 4. Double drum vibrating pedestrian rollers	 1 0 1 0
Item No.	**Equipment Details**	Minimum Number Required for the Contract Execution
1	**K) General Plant** 1. Primary/Secondary Crusher Unit/Power Screen Min capacity – 60t/hr. 2. Concrete batching plant Min Cap 20 m3/hr 3. Asphalt Concrete batching plant	 0 1 0
2	**L) Bituminous Plants** 5. Bitumen Pressure distributor 6. Asphalt concrete paver	 0 0
3	**M) Compactors** 7. Vibrating compaction plate 300 mm wide **8.** Vibrating compaction plate 600 mm wide	 0 1

Item No.	Equipment Details	Minimum Number Required for the Contract Execution
4	**N) Mobile Compressors** 6. Single tool (1.8 m3/min) 7. Two tool (2.8 – 7.3m3/min) 8. Four tool (11.3 – 25.3 m3/min) 9. Medium rock drill (1.5 m3/min) 10. Heavy rock drill (2.4 m3/min)	 0 0 0 2 1
5	**O) Concrete Equipment** 4. Mobile concrete mixers 5. Truck mounted mixers 6. Concrete vibrators	 2 Optional 4
6	**P) Transport (Tippers, dumpers, water tankers)** 8. 4 x 2 tippers payload 7 – 12 tonnes 9. 6 x 4 tippers payload 16 – 20 tonnes 10. 8 x 4 tippers payload 16 – 20 tonnes 11. Articulated trailers 12. Dump trucks 13. Flat bed lorries 14. Water tankers -8,000lts capacity -12,000lts capacity	 Optional 2 Optional Optional 2 Optional 1 0
7	**Q) Earth – Moving Equipment** 8. Tracked dozers with dozer attachment (D6-D9 equivalent) 9. Tracked loaders 10. Wheeled loaders 11. Motor scrappers 12. Motor graders (120 - 205kW) 13. Trench excavator 14. Pulvimixer	 1 1 Optional Optional 1 0 0
8	**R) Diesel Generators** 2. Diesel generators (15 – 200Kva)	 1
9	**S) Excavators** 6. Hydraulic crawler mounted (7 – 10 tonnes) – 0.25 – 0.4 m3 SAE bucket. 7. Hydraulic crawler mounted (10 – 16 tonnes) – 0.40 – 0.60 m3 SAE bucket. 8. Hydraulic wheel mounted (7 – 10 tonnes) – 0.25 – 0.4 m3 SAE bucket. 9. Hydraulic wheel mounted (10 – 16 tonnes) – 0.40 – 0.6 m3 SAE bucket. 10. Hydraulic wheel mounted back loader (7 – 10 tonnes) – 0.25 – 0.4 m3 SAE bucket.	1 0 0 0 0 0
10	**T) Rollers** 5. Self propelled single drum vibrating (various types) 6. Pneumatic rubber tyre (1-2 tonnes/wheel) 7. Sheep's foot roller **8.** Double drum vibrating pedestrian rollers	 1 0 1 0

vi) Other conditions depending on their seriousness.

a) History of non-performing contracts:
Tenderer and each member of JV incase the Tenderer is a JV, shall demonstrate that Non-performance of a contract did not occur because of the default of the Tenderer, or the member of a JV in the last ***3*** (*specify years*). The required information shall be furnished in the appropriate form.

b) Pending Litigation.
Financial position and prospective long-term profitability of the Single Tenderer, and in the case the Tenderer is a JV, of each member of the JV, shall remain sound according to criteria established with respect to Financial Capability under Paragraph (i) above if all pending litigation will be resolved against the Tenderer.Tenderer shall provide information on pending litigations in the appropriate form.

c) Litigation History.
There shall be no consistent history of court/arbitral award decisions against the Tenderer, in the last ***3(****specify years*). All parties to the contract shall furnish the information in the appropriate form about any litigation or arbitration resulting from contracts completed or ongoing under its execution over the years specified. A consistent history of awards against the Tenderer or any member of a JV may result in rejection of the tender.

Item no.	Qualification subject	Qualification requirement	Document to be completed by tenderer	For procuring Entity's use (qualification met or not met
1	**Nationarity**	Nationality in accordance with ITT3.6	**Forms E LI-1.1 and 1.2 with attachment**	
2	**Tax Obligations for Kenyan Tenderers**	Has produced a current tax clearance certificate or tax exemption certificate issued by Kenya Revenue Authority in accordance with ITT 3.14.	**Attachment**	
3	**Conflict of Interest**	No conflicts of interest in accordance with ITT3.3	**Form ofTender**	
4	**PPRA Eligibility**	Not having been declared ineligible by the PPRA as described in ITT 3.7	**Form of Tender**	
5	**State-owned Enterprise**	Meets conditions of ITT3.8	**FormsELI-1.1and1.2, with attachments**	
6	**Goods, equipment and services to be supplied under the contract**	To have their origin in any country that is not determined ineligible under ITT 4.1	**Forms ELI - 1.1 and 1.2, with attachments**	
7	**History of Non- Performing Contracts**	Non-performance of a contract did not occur as a result of contractor default since **1st January-2020.**	**Form CON-2**	
8	**Suspension Based on Execution of Tender/Proposal Securing Declaration by the Procuring Entity**	Not under suspension based on-execution of a Tender/Proposal Securing Declaration pursuant to ITT 19.9	**Form of Tender**	
9	**Pending Litigation**	Tender's financial position and prospective long-term profitability still sound according to criteria established in 3.1 and assuming that all pending litigation will NOT be resolved against the Tenderer.	**FormCON-2**	
10	**Litigation History**	No consistent history of court/arbitral award decisions against the Tenderer since **1st January 2021.**	**Form CON-2**	
11	**Financial Capabilities**	(i) The Tenderer shall demonstrate that it has access to, or has available, liquid assets, unencumbered real assets, lines of credit, and other financial means (independent of any contractual advance payment) sufficient to meet the construction cash flow requirements estimated as	**Form FIN - 3.1, with attachments**	

		Kenya Shillings One Million equivalent for the subject contract(s) net of the Tenderer's other commitments. (ii) The Tenderers shall also demonstrate, to the satisfaction of the Procuring Entity, that it has adequate sources of finance to meet the cash flow requirements on works currently in progress and for future contractcommitments. The audited balance sheets or, if not required by the laws of the Tenderer' s country, other financial statements acceptable to the Procuring Entity, for the last **Three (3) years** shall be submitted and must demonstrate the current soundness of the Tenderer's financial position and indicate its prospective long-term profitability. (iii) New firms and special group tenderers will need to provide proof of bank account.		
12	**Average Annual Construction Turnover**	Minimum average annual construction turnover of **Kenya Shillings Three (3) Million** equivalent calculated as total certified payments received for contracts in progress and/or completed within the last **[3] years,** divided by **[3] years.**	**Form FIN - 3.2**	
14	**Specific Construction & Contract Management Experience.**	A minimum number of **One (1) similar contracts** specified below that have been satisfactorily and substantially completed as a prime contractor, joint venture member, management contractor or sub-contractor between **1st January-2018** and tender submission deadline i.e.(number) contracts, each of minimum value **Kenya shillings One (1) million equivalent.** *[In case the Works are to be tender as individual contracts under multiple contract procedure, the minimum number of contracts required for purposes of evaluating qualification shall be selected from the options mentioned in ITT 35.4}* The similarity of the contracts shall be based on the following: *[Based on Section VII, Scope of Works, specify the minimum key requirements in terms of physical size, complexity, construction method, technology and/or other characteristics including part of the requirements that may be met by specialized subcontractors, if permitted in accordance with ITT 34.3]*	**FormEXP.** 4.2(**a**)	

SECTION IV - TENDERING FORMS

54. QUALIFICATION FORMS

1. FOREIGN TENDERERS 40%RULE.
2. TENDERER'S ELIGIBILITY- CONFIDENTIAL BUSINESS QUESTIONNAIRE
3. Form EQU: EQUIPMENT.
4. FORM PER -1.
5. FORM PER-2.
6. TENDERERS QUALIFICATION WITHOUT PRE-QUALIFICATION.
   - 6.1 FORM ELI-1.1.
   - 6.2 FORM ELI-1.2.
   - 6.3 FORM CON –2.
   - 6.4 FORM FIN –3.1.
   - 6.5 FORM FIN –3.2.
   - 6.6 FORM FIN –3.3.
   - 6.7 FORM FIN –3.4.
   - 6.8 FORM EXP -4.1.
   - 6.9 FORM EXP - 4.2(a).
   - 6.9 FORM EXP - 4.2 (a) (cont.).
   - 6.10 FORM EXP -4.2 (b).

55. OTHER FORMS

7. FORM OFTENDER.
8. FORM OF TENDER SECURITY - DEMAND BANKGUARANTEE.
9. FORM OF TENDER SECURITY (TENDERBOND).
10. FORM OF TENDER-SECURINGDECLARATION.
11. APPENDIX TO TENDER.

56. TECHNICAL PROPOSAL FORMS

Site Organization.

Method Statement.

Mobilization Schedule.

Construction Schedule.

QUALIFICATION FORMS

QUALIFICATION FORMS

1. FOREIGN TENDERERS 40% RULE

Pursuant to ITT 3.9, a foreign tenderer must complete this form to demonstrate that the tender fulfils this condition.

ITEM	Description of Work Item	Describe location of Source	COST in K. shillings	Comments, if any
A	**Local Labor**			
1				
2	NA			
3				
4				
5				
B				
1				
2	NA			
3				
4				
5				
C	**Local materials**			
1				
2				
3	NA			
4				
5				
D				
1				
2				
3				
4				
5				
E				
1				
2				
3				
4				
5				
6				
	TOTAL COST LOCAL CONTENT			
	PERCENTAGE OF CONTRACT PRICE			

3. FORM EQU: EQUIPMENT

The Tenderer shall provide adequate information to demonstrate clearly that it has the capability to meet the requirements for the key equipment listed in Section III, Evaluation and Qualification Criteria. A separate Form shall be prepared for each item of equipment listed, or for alternative equipment proposed by the Tenderer.

<table>
<tr><td colspan="5">Item of equipment</td></tr>
<tr><td rowspan="2">equipment information</td><td colspan="2">Name of manufacturer</td><td colspan="2">Model and power rating</td></tr>
<tr><td>Capacity</td><td></td><td colspan="2">Year of manufacturer</td></tr>
<tr><td rowspan="2">Current status</td><td colspan="4">Current location</td></tr>
<tr><td colspan="4">Details of current commitments</td></tr>
<tr><td>Source</td><td colspan="4">Indicate source of equipment</td></tr>
<tr><td></td><td>☐Owned</td><td>☐Rented</td><td>☐Leased</td><td>☐Specialyy manufactured</td></tr>
<tr><td>Owner</td><td colspan="4">Name of owner</td></tr>
<tr><td></td><td colspan="4">Address of owner</td></tr>
<tr><td></td><td colspan="2">Telephone</td><td colspan="2">Contact name</td></tr>
<tr><td></td><td colspan="2">Fax</td><td colspan="2">Telex</td></tr>
<tr><td>Agreement</td><td colspan="4">Details of rental /lease /manufacture agreement specific to the project</td></tr>
</table>

4. FORM PER-1

Contractor's Representative and Key Personnel Schedule.

Tenderers should provide the names and details of the suitably qualified Contractor's Representative and Key Personnel to perform the Contract. The data on their experience should be supplied using the Form PER-2 below for each candidate.

Contractor' Representative and Key Personnel.

1.	**Title of position:** Contractor's Representative :	
	Name of candidate:	
	Duration of appointment:	
	Time commitment: for this position:	
	Expected time schedule for this position:	
2.	**Title of position:**	
	Name of candidate:	
	Duration of appointment:	
	Time commitment: for this position:	
	Expected time schedule for this position:	
3.	**Title of position:**	
	Name of candidate:	
	Duration of appointment:	
	Time commitment: for this position:	
	Expected time schedule for this position:	

4.	**Titleofposition:**	
	Name of candidate:	
	Duration of appointment:	
	Time commitment: for this position:	
	Expected time schedule for this position:	
5.	**Title of position:** *[insert title]*	
	Name of candidate	
	Duration of appointment:	
	Time commitment: for this position:	
	Expected time schedule for this position:	

5. FORM PER-2:

Resume and Declaration - Contractor's Representative and Key Personnel.

<table>
<tr><td colspan="4">Name of Tenderer</td></tr>
<tr><td colspan="4">Position [#1]: [title of position from Form PER-1]</td></tr>
<tr><td>Personnel information</td><td colspan="2">Name:</td><td>Date of birth:</td></tr>
<tr><td></td><td colspan="2">Address:</td><td>E-mail:</td></tr>
<tr><td rowspan="4"></td><td colspan="2"></td><td></td></tr>
<tr><td colspan="3">Professional qualification:</td></tr>
<tr><td colspan="3">Academic qualification</td></tr>
<tr><td colspan="3">Language proficiency:</td></tr>
<tr><td colspan="4">Details</td></tr>
<tr><td rowspan="4"></td><td colspan="3">Address of Procuring Entity:</td></tr>
<tr><td colspan="2">Telephone:</td><td>Contact (manager / personnel officer):</td></tr>
<tr><td colspan="3">Fax:</td></tr>
<tr><td colspan="2">Jobtitle:</td><td>Years with present procuring Entity:</td></tr>
</table>

Summarize professional experience in reverse chronological order. Indicate particular technical and managerial experience relevant to the project.

Project	**Role**	**Duration of involvement**	**Relevant experience**

DECLARATION:

I, the under signed……. *[insert either "Contractor's Representative" or "Key Personnel" as applicable]*, certify that to the Lowest of my knowledge and belief, the information contained in this Form PER-2 correctly describes myself, my qualifications and my experience.

I confirm that I am available as certified in the following table and throughout the expected time schedule for this position as provided in the Tender:

Commitment	Details
Commitment to duration of contract:	
Time commitment:	

I understand that any misrepresentation or omission in this Form may:

a) be taken into consideration during Tenderevaluation;
b) result in my disqualification from participating in the Tender;
c) result in my dismissal from the contract.

Name of Contractor's Representative or Key Personnel: [*insert name*]

Signature:_____

Date: (day month year): _____

Countersignature of authorized representative of the Tenderer:

Signature:_____

Date: (day month year): _____

6. TENDERERS QUALIFICATION WITHOUT PRE-QUALIFICATION

To establish its qualifications to perform the contract in accordance with Section III, Evaluation and Qualification Criteria the Tenderer shall provide the information requested in the corresponding Information Sheets included hereunder.

6.1 FORM ELI-1.1 Tenderer Information Form:

Date:

ITT No. and Title: ……

Tenders Name:
Incase of joint venture(jv) , name of each member:
Tenderers actual or intended country of registration:
Tenderers actual or intended year of incoporatio
Tenderer legal address
Tenderer's authorized representative information Name: _____ Address: _____ Telephone/Faxnumbers:_____ E-mailaddress: _____
1.Attached are copies of original documents of ☐ Articles of Incorporation (or equivalent documents of constitution or association), and/or documents of registration of the legal entity named above, in accordance with ITT 3.6 ☐ In case of JV, letter of intent to form JV or JV agreement, in accordance with ITT 3.5 ☐ In case of state-owned enterprise or institution, in accordance with ITT 3.8, documents establishing: 2. Included are the organizational chart, a list of Board of Directors, and the beneficial ownership.

6.2 FORM ELI-1.2

Tenderer's JV Information Form.

(to be completed for each member of Tenderer's JV)

Date:_____

ITT No. and title:_____

KeRRA/……

Tenderer's JV name:
JV member's name:
JV member's country of registration:
JV member's year of constitution:
JV member's legal address in country of constitution:
JV member's authorized representative information Name: _____ Address: _____ Telephone/Fax numbers:_____ E-mail address: _____
1. Attached are copies of original documents of ☐Articles of Incorporation (or equivalent documents of constitution or association), and/or registration documents of the legal entity named above, in accordance with ITT 43.6. ☐ In case of a state-owned enterprise or institution, documents establishing legal and financial autonomy, operation in accordance with commercial law, and that they are not under the supervision of the Procuring Entity, in accordance with ITT 3.8. 2. Included are the organizational chart, a list of Board of Directors, and the beneficial ownership.

6.3 FORM CON – 2

Historical Contract Non-Performance, Pending Litigation and Litigation History

Tenderer'sName:_____

Date:_____

JV Member's Name_____

ITT No. and title:_____

KeRRA/……

Non-Performed Contracts in accordance with Section III, Evaluation and Qualification Criteria			
☐Contract non-performance did not occur since 1st January *[insert year]*specified in Section III, Evaluation and Qualification Criteria, Sub-Factor 2.1. ☐Contract(s) not performed since 1st January *[insert year]* specified in Section III, Evaluation and Qualification Criteria, requirement 2.1			
Year	**Non- performed portion of contract** Amount & %	**Contract Identification**	**Total Contract Amount (current value, currency, exchange rate and Kenya Shilling equivalent)**
		Contract identification: Name of Procuring Entity: Reason(s) for non perfomance :	
Pending Litigation, in accordance with Section III, Evaluation and Qualification Criteria			
☐No pending litigation in accordance with Section III, Evaluation and Qualification Criteria, Sub-Factor 2.3. ☐Pending litigation in accordance with Section III, Evaluation and Qualification Criteria, Sub-Factor 2.3 as indicated below.			

Year of dispute	**Amount in dispute (ksh)**	**Contract Identification**	**Total Contract Amount (currency), Kenya Shilling Equivalent (exchange rate)**
		Contract Identification: Name of Procuring Entity: Address of Procuring Entity: Matter in dispute:	

		Party who initiated the dispute: Status of dispute:	
		Contract Identification: Name of Procuring Entity: Address of Procuring Entity: Matter in dispute: Party who initiated the dispute: Status of dispute:	

I Litigation History in accordance with Section III, Evaluation and Qualification Criteria

D No Litigation History in accordance with Section Ill, Evaluation and Qualification Criteria, Sub- Factor 2.4. D Litigation History in accordance with Section III, Evaluation and Qualification Criteria, Sub- Factor 2.4 as indicated below.			
	[insert percentage]	Contract Identification: [indicate complete contract name, number, and any other identification] Name of Procuring Entity: Address of Procuring Entity: Matter in dispute: Party who initiated the dispute Reason(s) for Litigation and award decision *[indicate main reason(s)}*	*[insert amount}*

FORM FIN –3.1:
Financial Situation and Performance.

Tenderer's Name:_____
Date:_____
JV Member's Name_____
ITT No. and title:_____

KeRRA/…….
6.3.1 Financial Data.

Type of Financial information in_____ (currency)	**Historic information for previous _____ *years,* _____ (amount in currency, currency, exchange rate*, USD equivalent)**				
	Year 1	Year 2	Year 3	Year 4	Year 5
Statement of Financial Position (Information from Balance Sheet)					
Total Assets (TA)					
Total Liabilities (TL)					
Total Equity/Net Worth (NW)					
Current Assets (CA)					
Current Liabilities (CL)					
Working Capital (WC)					
Information from Income Statement					
Total Revenue (TR)					
Profits Before Taxes (PBT)					
Cash Flow Information					
Cash Flow from Operating Activities					

**Refer to ITT 15 for the exchange rate*

6.4.2 Sources of Finance.

Specify sources of finance to meet the cash flow requirements on works currently in progress and for future contract commitments.

No.	Source of finance	Amount (Kenya Shilling equivalent)
1		
2		
3		

6.4.3 Financial documents.

The Tenderer and its parties shall provide copies of financial statements for_____years pursuant Section III, Evaluation and Qualifications Criteria, Sub-factor 3.1. The financial statements shall:

a) reflect the financial situation of the Tenderer or incase of JV member, and not an affiliated entity (such as parent company or group member).
b) be independently audited or certified in accordance with local legislation.
c) be complete, including all notes to the financial statements.
d) correspond to accounting periods already completed and audited.

Attached are copies of financial statements [1] for the_____years required above; and complying with the requirements

6.5 FORM FIN – 3.2:

Average Annual Construction Turnover

Tenderer's Name:_____
Date:_____
JV Member's Name_____
ITT No. and title:

KeRRA/……

	Annual turnover data (construction only)		
Year	**Amount Currency**	**Exchange Rate**	**Kenya Shilling equivalent**
[indicate year]	*[insert amount and indicate currency]*		
Average Annual Construction Turnover*			

**See Section III, Evaluation and Qualification Criteria, Sub-Factor 3.2*

[1]*If the most recent set of financial statements is for a period earlier than 12 months from the date of Tender, the reason for this should be justified.*

6.6 FORM FIN –3.3:
Financial Resources:

Specify proposed sources of financing, such as liquid assets, unencumbered real assets, lines of credit, and other financial means, net of current commitments, available to meet the total construction cashflow demands of the subject contractor contracts as specified in Section III, Evaluation and Qualification Criteria.

Financial Resources		
No.	**Source of financing**	**Amount (Kenya Shilling equivalent)**
1		
2		
3		

6.7 FORM FIN–3.4:
(1) Current Contract Commitments / Works in Progress:

Tenderers and each member to a JV should provide information on their current commitments on all contracts that have been awarded, or for which a letter of intent or acceptance has been received, or for contracts approaching completion, but for which an unqualified, full completion certificate has yet to be issued.

Current Contract Commitments					
No.	**Name of Contract**	**Procuring Entity's Contact Address, Tel,**	**Valueof Outstanding Work [Current Kenya Shilling /month Equivalent]**	**Estimated Completion Date**	**Average Monthly Invoicing Over Last Six Months [Kenya Shilling /month)]**
1					
2					
3					
4					
5					

6.8 FORM EXP -4.1

General Construction Experience

Tenderer's Name:_____

Date:_____

JV Member's Name:_____

ITT No. and title:

KeRRA/……

Starting Year	Ending Year	Contract Identification	Roleof Tenderer
		Contract name: _____ Brief Description of the Works performed by the Tenderer: _____ Amount of contract: _____ Name of Procuring Entity: _____ Address: _____	
		Contract name: _____ Brief Description of the Works performed by the Tenderer: _____ Amount of contract: _____ Nameof ProcuringEntity: _____ Address: _____	
		Contract name: _____ Brief Description of the Works performed by the Tenderer: _____ Amountof contract: _____ Nameof ProcuringEntity: _____ Address: _____	

6.9 FORM EXP -4.2(a)

Specific Construction and Contract Management Experience.

Tenderer's Name:_____
Date:_____
JV Member's Name_____
ITT No. and title:_____

KeRRA/……

Similar Contract No.

Contract Identification	**Information**			
Award date				
Completion date				
Role in Contract	Prime Contractor ☐			
Total Contract Amount If member in a JV or sub-contractor,		Member in JV ☐	Management Contractor ☐	Sub-contractor ☐
specify participation in total Contract amount			**KenyaShilling**	
Procuring Entity's Name: Address:				
Telephone/fax number E-mail:				

Description of the similarity in accordance with Sub-Factor 4.2(a) of Section III: 1.	
Amount	
2.Physical size of required works items	
3.Complexity	
4.Methods/Technology	
5.Construction rate for key activities	
6.Other Characteristics	

6.10 FORM EXP -4.2(b)

Construction Experience in Key Activities

Tenderer's Name:_____
Date:_____
Tenderer's JV Member Name:_____
Sub-contractor's Name[2] (as perITT34):_____

ITT No. and title:_____

KeRRA/……

All Sub-contractors for key activities must complete the information in this form as per ITT 34 and Section III, Evaluation and Qualification Criteria, Sub-Factor 4.2.

1. Key Activity No One: _

	Information			
Contract Identification				
Award date				
Completion date				
Role in Contract	Prime Contractor ☐	Member in JV ☐	Management Contractor ☐	Sub-contractor ☐
Total Contract Amount			**Kenya Shilling**	

Quantity (Volume, number or rate of production, as applicable) performed under the contract per year or part of the year	Total quantity in the contract (i)	Percentage participation (ii)	Actual Quantity Performed (i) x (ii)
Yearl			
Year 2			
Year 3			
Year 4			
Procuring Entity's Name:			

[2] *If applicable*

Address: Telephone/fax number E-mail:	**Information**

Description of the key activities in accordance with Sub-Factor 4.2(b) of Section III:	

2 Activity No. Two

3.……

OTHER FORMS

7. FORM OF TENDER:

INSTRUCTIONS TO TENDERERS

i) The Tenderer must prepare this Form of Tender on stationery with its letterhead clearly showing the Tenderer's complete name and business address.

ii) All italicized text is to help Tenderer in preparing this form.

iii) Tenderer must complete and sign CERTIFICATE OF INDEPENDENT TENDER DETERMINATION and the SELF DECLARATION OF THE TENDERER attached to this Form of Tender.

iv) The Form of Tender shall include the following Forms duly completed and signed by the Tenderer.

- *Tenderer's Eligibility-Confidential Business Questionnaire.*
- *Certificate of Independent Tender Determination.*
- *Self-Declaration of the Tenderer.*

Date of this Tender Submission……

Request for Tender No.: KeRRA/……

Name and description of Tender: KeRRA/……

Alternative No.: ……NA

To: Regional Director,

Kenya Rural Roads Authority,

P.O. Box 1391-70100 Garissa

Dear Sirs,

1. In accordance with the Conditions of Contract, Specifications, Drawings and Bills of Quantities for the execution of the above named Works, we, the undersigned offer to construct and complete the Works and remedy any defects therein for the sum of Kenya Shillings [*[Amount in figures]*……Kenya Shillings *[amount in words]*……
……
……

The above amount includes foreign currency amount (s) of [*state figure or a percentage and currency*] [figures] _____[words]_____
_____

The percentage or amount quoted above does not include provisional sums, and only allows not more than two foreign currencies.

2. We undertake, if our tender is accepted, to commence theWorks as soon as is reasonably possible after the receipt of the Engineer's notice to commence, and to complete the whole of the Works comprised in the Contract within the time stated in the Particular Conditions of Contract.

3. We agree to adhere by this tender until_____*[Insert date]*, and it shall remain binding upon us and may be accepted at any time before that date.

4. Unless and until a formal Agreement is prepared and executed this tender together with your written acceptance thereof, shall constitute abinding Contract between us. We further understand that you are not bound to accept the lowest or any tender you may receive.

5. We, the undersigned, further declare that:

i) *No reservations:* We have examined and have no reservations to the tender document, including Addenda issued in accordance with ITT 8;

ii) *Eligibility:* We meet the eligibility requirements and have no conflict of interest in accordance with ITT 3

iii) and 4;

iv) *Tender-Securing Declaration:* We have not been suspended nor declared ineligible by the Procuring Entity based on execution of a Tender-Securing or Proposal-Securing Declaration in the Procuring Entity's Country in accordance with ITT 19.8;

(iv) Conformity: We offer to execute in conformity with the tendering documents and in accordance with the implementation and completion specified in the construction schedule, the following Works: *[insert a brief description of the Works];*

(v) Tender Price: The total price of our Tender, excluding any discounts offered in item 1 above is: *[Insert one of the options below as appropriate]*

(vi) **Option1,** incase of one lot: Total price is: [*insert the total price of the Tender in words and figures, indicating the various amounts and the respective currencies*]; Or

Option2, in case of multiple lots:

a) *Total price of each lot* [*insert the total price of each lot in words and figures, indicating the various amounts and the respective currencies*]; and

b) *Total price of all lots* (sum of all lots) [*insert the total price of all lots in words and figures, indicating the various amounts and the respective currencies*];

vii) Discounts: The discounts offered and the methodology for their application are:

viii) The discounts offered are: [*Specify in detail each discount offered.*]

ix) The exact method of calculations to determine the net price after application of discounts is shown below: [*Specify in detail the method that shall be used to apply the discounts*];

x) *Tender Validity Period:* Our Tender shall be valid for the period specified in TDS 18.1 (as amended, if applicable) from the date fixed for the Tender submission deadline specified in TDS 22.1(as amended, if applicable), and it shall remain binding upon us and may be accepted at any time before the expiration of that period;

xi) *Performance Security:* If our Tender is accepted, we commit to obtain a Performance Security in accordance with the Tendering document;

xii) *One Tender Per Tender:* We are not submitting any other Tender(s) as an individual Tender, and we are not participating in any other Tender(s) as a Joint Venture member or as a subcontractor, and meet the requirements of ITT3.4, other than alternative Tenders submitted in accordance with ITT 13.3;

xiii) *Suspension and Debarment:* We, along with any of our subcontractors, suppliers, Engineer, manufacturers, or service providers for any part of the contract, are not subject to, and not controlled by any entity or individual that is subject to, a temporary suspension or a debarment imposed by the Public Procurement Regulatory Authority or any other entity of the Government of Kenya, or any international organization.

xiv) *State-owned enterprise or institution:* [*select the appropriate option and delete the other*] [*We are not a state-owned enterprise or institution*]/[*We are a state-owned enterprise or institution but meet the requirements of ITT 3.7*];

xv) *Commissions, gratuities, fees:* We have paid, or will pay the following commissions, gratuities, or fees with respect to the tender process or execution of the Contract: *[insert complete name of each Recipient, its full address, the reason for which each commission or gratuity was paid and the amount and currency of each such commission or gratuity]*

Name of Recipient	Address	Reason	Amount

xvi) *Binding Contract:* We understand that this Tender, together with your written acceptance thereof included in your Letter of Acceptance, shall constitute a binding contract between us, until a formal contract is prepared and executed;

xvii) *Not Bound to Accept:* We understand that you are not bound to accept the lowest evaluated cost Tender, the Most Advantageous Tender or any other. Tender that you may receive;

xviii) *Fraud and Corruption:* We hereby certify that we have taken steps to ensure that no person acting for us or on our behalf engages in any type of Fraud and Corruption;

xix) *Collusive practices:* We hereby certify and confirm that the tender is genuine, non-collusive and made with the intention of accepting the contract if awarded. To this effect we have signed the "Certificate of Independent Tender Determination" attached below.

xx) We undertake to adhere by the Code of Ethics for Persons Participating in Public Procurement and Asset Disposal, copy available from……..*ify website*) during the procurement process and the execution of any resulting contract.

xxi) We, the Tenderer, have completed fully and signed the following Forms as part of our Tender:

a) Tenderer's Eligibility; Confidential Business Questionnaire – to establish we are not in any conflict to interest.

b) Certificate of Independent Tender Determination – to declare that we completed the tender without colluding with other tenderers.

c) Self-Declaration of the Tenderer– to declare that we will, if awarded a contract, not engage in any form of fraud and corruption.

d) Declaration and commitment to the Code of Ethics for Persons Participating in Public Procurement and Asset Disposal.

Further, we confirm that we have read and understood the full content and scope of fraud and corruption as informed in **"Appendix 1- Fraud and Corruption"** attached to the Form of Tender.

Name of the Tenderer: ……
[I*nsert complete name of person signing the Tender]*

Name of the person duly authorized to sign the Tender on behalf of the Tenderer:
……
**[*insert complete name of person duly authorized to sign the Tender*]

Title of the person signing the Tender…….
[*insert complete title of the person signing the Tender*]

Signature of the person named above: [*insert signature of person whose name and capacity are shown*

above] **Date signed** [*insert date of signing*] day of [*insert month*], [*insert year*]

Date signed……..day of……..

Notes
** In the case of the Tender submitted by joint venture specify the name of the Joint Venture as Tenderer*
*** Person signing the Tender shall have the power of attorney given by the Tenderer to be attached with the Tender,*

A. TENDERER'S ELIGIBILITY-CONFIDENTIAL BUSINESS QUESTIONNAIRE

Instruction to Tenderer

Tender is instructed to complete the particulars required in this Form, *one form for each entity if Tender is a JV.* Tenderer is further reminded that it is an offence to give false information on this Form.

i)Tenderer's Details:

	ITEM	DESCRIPTION
1	Name of the Procuring Entity	**KENYA RURAL ROAD AUTHORITY**
2	Reference Number of the Tender	**KeRRA/……**
3	Date and Time of Tender Opening	
4	Name of the Tenderer	
5	Full Address and Contact Details of the Tenderer.	1.Country 2. City 3.Location Building 4. 5.Floor 6. Postal Address 7. Name and email of contact person.
6	Current Trade License Registration Number and Expiring date	
7	Name, country and full address (*postal and physical addresses, email, and telephone number*) of Registering Body/Agency	
8	Description of Nature of Business	
9	Maximum value of business which the Tenderer handles.	
10	State if Tenders Company is listed in stock exchange, give name and full address (*postal and physical addresses, email, and telephone number*) of state which stock exchange	

General and Specific Details

i) Sole Proprietor, provide the following details.

Name in full_____Age_____
Nationality_____Country of Origin_____
Citizenship _____

ii) Partnership, provide the following details.

	Names of Partners	Nationality	Citizenship	% Shares owned
1				
2				
3				

(iv) Registered Company, provide the following details.

i) Private or public Company _____

ii) State the nominal and issued capital of the Company

Nominal Kenya Shillings (Equivalent).....

Issued Kenya Shillings (Equivalent).....

iii) Give details of Directors as follows.

	Names of Director	Nationality	Citizenship	% Shares owned
1				
2				
3				

(v) DISCLOSURE OF INTEREST- Interest of the Firm in the Procuring Entity.

i) Are there any person/persons in…… (*Name of Procuring Entity)* who has/have an interest or relationship in this firm? Yes/No……

If yes, provide details as follows.

	Names of Person	Designation in the Procuring Entity	Interest or Relationship with Tenderer
1			
2			
3			

ii) Conflict of interest disclosure

	Type ofConflict	Disclosure YES or NO	If YES provide details of the relationship with Tenderer
1	Tenderer is directly or indirectly controls, is controlled by or is under common control with another tenderer.		
2	Tenderer receives or has received any direct or indirect subsidy from another tenderer.		

Tenderer has the same legal representative as another tenderer

4	Tender has a relationship with another tenderer, directly or through common third parties, that puts it in a position to influence the tender of another tenderer, or influence the decisions of the Procuring Entity regarding this tendering process.		
5	Any of the Tenderer's affiliates participated as a consultant in the preparation of the design or technical specifications of the works that are the subject of the tender.		
6	Tenderer would be providing goods, works, non-consulting services or consulting services during implementation of the contract specifiedin this Tender Document.		
7	Tenderer has a close business or family relationship with a professional staff of the Procuring Entity who are directly or indirectly involved in the preparation of the Tender document or specifications of the Contract, and/or the Tender evaluation process of such contract.		
8	Tenderer has a close business or family relationship with a professional staff of the Procuring Entity who would be involved in the implementation or supervision of the such Contract.		
9	Has the conflict stemming from such relationship stated in item 7 and 8 above been resolved in a manner acceptable to the Procuring Entity throughout the tendering process and execution of the Contract.		

(vi) Certification

On behalf of the Tenderer, I certify that the information given above is complete, current and accurate as at the date of submission.

Full Name_____ Title or Designation_____

_____ _____

(Signature) *(Date)*

B. CERTIFICATE OF INDEPENDENT TENDER DETERMINATION

I, the undersigned, in submitting the accompanying Letter of Tender to the **Kenya Rural Roads Authority** for:

…….....

Tender No. KeRRA/……

in response to the request for tenders made by:_____[Name of Tenderer] do hereby make the following statements that I certify to be true and complete in every respect:

I certify, on behalf of_____[Name of Tenderer] that:

1. I have read and I understand the contents of this Certificate;

2. I understand that the Tender will be disqualified if this Certificate is found not to be true and complete in every respect;

3. I am the authorized representative of the Tenderer with authority to sign this Certificate, and to submit the Tender on behalf of the Tenderer;

4. For the purposes of this Certificate and the Tender, I understand that the word "competitor" shall include any individual or organization, other than the Tenderer, whether or not affiliated with the Tenderer, who:
   a) has been requested to submit a Tender in response to this request for tenders;
   b) could potentially submit a tender in response to this request for tenders, based on their qualifications, abilities or experience;

5. The Tenderer discloses that [check one of the following, as applicable]:
   a) The Tenderer has arrived at the Tender independently from, and without consultation, communication, agreement or arrangement with, any competitor;
   b) the Tenderer has entered into consultations, communications, agreements or arrangements with one or more competitors regarding this request for tenders, and the Tenderer discloses, in the attached document(s), complete details thereof, including the names of the competitors and the nature of, and reasons for, such consultations, communications, agreements or arrangements;

6. In particular, without limiting the generality of paragraphs (5) (a) or (5) (b) above, there has been no consultation, communication, agreement or arrangement with any competitor regarding:
   a) prices;
   b) methods, factors or formulas used to calculate prices;
   c) the intention or decision to submit, or not to submit, a tender; or
   d) the submission of a tender which does not meet the specifications of the request for Tenders; except as specifically disclosed pursuant to paragraph (5) (b) above;

7. In addition, there has been no consultation, communication, agreement or arrangement with any competitor regarding the quality, quantity, specifications or delivery particulars of the works or services to which this request for tenders relates, except as specifically authorized by the procuring authority or as specifically disclosed pursuant to paragraph (5) (b) above;

8. The terms of the Tender have not been, and will not be, knowingly disclosed by the Tenderer, directly or

indirectly, to any competitor, prior to the date and time of the official tender opening, or of the awarding of the Contract, whichever comes first, unless otherwise required by law or as specifically disclosed pursuant to paragraph (5) (b) above.

Name_____

Title_____

Date_____

[Name, title and signature of authorized agent of Tenderer and Date]

SELF-DECLARATION FORMS

FORM SD1

SELF DECLARATION THAT THE PERSON/TENDERER IS NOT DEBARRED IN THE MATTER OF THE PUBLIC PROCUREMENT AND ASSET DISPOSAL ACT 2015.

I, ……, of Post Office Box …….……... being a resident of……..in the Republic of ……. do hereby make a statement as follows: -

1. THAT I am the Company Secretary/Chief Executive/Managing Director/Principal Officer/Director of (*insert name of the Company)*
   ……...……
   who is a Bidder in respect of Tender No.

   KeRRA/……

   For …….

   for **Kenya Rural Roads Authority***)* and duly authorized and competent to make this statement.

2. THAT the aforesaid Bidder, its Directors and subcontractors have not been debarred from participating in procurement proceeding under Part IV of the Act.

3. THAT what is deponed to herein above is true to the best of my knowledge, information and belief.

…….	…….	……
(Title)	(Signature)	(Date)

Bidder Official Stamp

FORM SD2

(2) SELF DECLARATION THAT THE TENDERER WILL NOT ENGAGE IN ANY CORRUPT OR FRAUDULENT PRACTICE

I, ……of P. O. Box ……being a resident of……. in the Republic of…__……. .do hereby make a statement as follows: -

1. THAT I am the Chief Executive/Managing Director/PrincipalOfficer/Director of ……...…… *(insert name of the Company)* who is a Bidder in respect of Tender No. **KeRRA/……** for **……** for **Kenya Rural Roads Authority***))* and duly authorized and competent to make this statement.

2. THAT the aforesaid Bidder, its servants and/or agents /subcontractors will not engage in any corrupt or fraudulent practice and has not been requested to pay any inducement to any member of the Board, Management, Staff and/or employees and/or agents of……. *(insert name of the Procuring entity)* which is the procuring entity.

3. THAT the aforesaid Bidder, its servants and/or agents /subcontractors have not offered any inducement toany member of the Board, Management, Staff and/or employees and/or agents of……..... *(name of the procuring entity)*

4. THAT the aforesaid Bidder will not engage/has not engaged in any corrosive practice with other bidders participating in the subject tender

5. THAT what is deponed to herein above is true to the best of my knowledge, information and belief.

…… …… ……
(Title) (Signature) (Date)

Bidder's Official Stamp

DECLARATION AND COMMITMENT TO THE CODE OF ETHICS

I …….....……. (person) on behalf of *(Name of the Business/Company/Firm*) …….....declare that I have read and fully understood the contents of the Public Procurement & Asset Disposal Act, 2015, Regulations and the Code of Ethics for persons participating in Public Procurement and Asset Disposal and my responsibilities under the Code.

I do hereby commit to abide by the provisions of the Code of Ethics for persons participating in Public Procurement and Asset Disposal.

Name of Authorized signatory.....

Sign.....

Position.....

Office address..... Telephone.....
E-mail.....
Name of the Firm/Company.....
Date.....

(Company Seal/Rubber Stamp where
applicable) Witness

Name.....

Sign.....

Date.....

D. APPENDIX 1-FRAUD AND CORRUPTION

(Appendix 1 shall not be modified)

1. Purpose

1.1 The Government of Kenya's Anti-Corruption and Economic Crime laws and their sanction's policies and procedures, Public Procurement and Asset Disposal Act *(no. 33 of 2015)* and its Regulation, and any other Kenya's Acts or Regulations related to Fraud and Corruption, and similar offences, shall apply with respect to Public Procurement Processes and Contracts that are governed by the laws of Kenya.

2. Requirements

2.1 The Government of Kenya requires that all parties including Procuring Entities, Tenderers, (applicants/proposers), Consultants, Contractors and Suppliers; any Sub-contractors, Sub-consultants, Service providers or Suppliers; any Agents (whether declared or not); and any of their Personnel, involved and engaged in procurement under Kenya's Laws and Regulation, observe the highest standard of ethics during the procurement process, selection and contract execution of all contracts, and refrain from Fraud and Corruption and fully comply with Kenya's laws and Regulations as per paragraphs 1.1 above.

2.2 Kenya's public procurement and asset disposal act *(no. 33 of 2015)* under Section 66 describes rules to be followed and actions to be taken in dealing with Corrupt, Coercive, Obstructive, Collusive or Fraudulent practices, and Conflicts of Interest in procurement including consequences for offences committed. A few of the provisions noted below highlight Kenya's policy of no tolerance for such practices and behavior:

1) a person to whom this Act applies shall not be involved in any corrupt, coercive, obstructive, collusive or fraudulent practice; or conflicts of interest in any procurement or asset disposal proceeding;

2) A person referred to under subsection (1) who contravenes the provisions of that sub-section commits an offence;

3) Without limiting the generality of the subsection (1) and (2), the person shall be—
   a) disqualified from entering into a contract for a procurement or asset disposal proceeding; or
   b) if a contract has already been entered into with the person, the contract shall be voidable;

4) The voiding of a contract by the procuring entity under subsection (7) does not limit any legal remedy the procuring entity may have;

5) An employee or agent of the procuring entity or a member of the Board or committee of the procuring entity who has a conflict of interest with respect to a procurement—
   a) shall not take part in the procurement proceedings;
   b) shall not, after a procurement contract has been entered into, take part in any decision relating to the procurement or contract; and
   c) shall not be a subcontractor for the bidder to whom was awarded contract, or a member of the group of bidders to whom the contract was awarded, but the subcontractor appointed shall meet all the requirements of this Act.

6) An employee, agent or member described in subsection (1) who refrains from doing anything prohibited under that subsection, but for that subsection, would have been within his or her duties shall disclose the conflict of interest to the procuring entity;

7) If a person contravenes subsection (1) with respect to a conflict of interest described in subsection (5) (a) and the contract is awarded to the person or his relative or to another person in whom one of them had a director indirect pecuniary interest, the contract shall be terminated and all costs incurred by the public entity shall be made good by the awarding officer. Etc.

2.3 In compliance with Kenya's laws, regulations and policies mentioned above, the Procuring Entity:

a) Defines broadly, for the purposes of the above provisions, the terms set forth below as follows:

i) “corrupt practice” is the offering, giving, receiving, or soliciting, directly or indirectly, of anything of value to influence improperly the actions of another party;

ii) “fraudulent practice” is any act or omission, including misrepresentation, that knowingly or recklessly misleads, or attempts to mislead, a party to obtain financial or other benefit or to avoid an obligation;

iii) “collusive practice” is an arrangement between two or more parties designed to achieve an improper purpose, including to influence improperly the actions of another party;

iv) “coercive practice” is impairing or harming, or threatening to impair or harm, directly or indirectly, any party or the property of the party to influence improperly the actions of a party;

v) “obstructive practice” is:

- deliberately destroying, falsifying, altering, or concealing of evidence material to theinvestigation or making false statements to investigators in order to materially impede investigation by Public Procurement Regulatory Authority (PPRA) or any other appropriate authority appointed by Government of Kenya into allegations of a corrupt, fraudulent, coercive, or collusive practice; and/or threatening, harassing, or intimidating any party to prevent it from disclosing its knowledge of matters relevant to the investigation or from pursuing the investigation; or

- acts intended to materially impede the exercise of the PPRA's or the appointed authority's inspection and audit rights provided for under paragraph 2.3 e. below.

b) Defines more specifically, in accordance with the above procurement Act provisions set forth for fraudulent and collusive practices as follows:

"fraudulent practice" includes a misrepresentation of fact in order to influence a procurement or disposal process or the exercise of a contract to the detriment of the procuring entity or the tenderer or the contractor, and includes collusive practices amongst tenderers prior to or after tender submission designed to establish tender prices at artificial non-competitive levels and to deprive the procuring entity of the benefits of free and open competition.

c) Rejects a proposal for award[1] of a contract if PPRA determines that the firm or individual recommended for award, any of its personnel, or its agents, or its sub-consultants, sub-contractors, service providers, suppliers and/ or their employees, has, directly or indirectly, engaged in corrupt, fraudulent, collusive, coercive, or obstructive practices in competing for the contract in question;

d) Pursuant to the Kenya's above stated Acts and Regulations, may sanction or recommend to appropriate authority(ies) for sanctioning and debarment of a firm or individual, as applicable under the Acts and Regulations;

e) Requires that a clause be included in Tender documents and Request for Proposal documents requiring (i) Tenderers (applicants/proposers), Consultants, Contractors, and Suppliers, and their Sub-contractors, Sub-consultants, Service providers, Suppliers, Agents personnel, permit the PPRA or any other appropriate authority appointed by Government of Kenya to inspect[2] all accounts, records and other documents relating to the procurement process, selection and/or contract execution, and to have them audited by auditors appointed by the PPRA or any other appropriate authority appointed by Government of Kenya; and

f) Pursuant to Section 62 of the above Act, requires Applicants/Tenderers to submit along with their Applications/Tenders/Proposals a “Self-Declaration Form” as included in the procurement document declaring that they and all parties involved in the procurement process and contract execution have not engaged/will not engage in any corrupt or fraudulent practices.

---

[1] *For the avoidance of doubt, a party's ineligibility to be awarded a contract shall include, without limitation, (i) applying for pre-qualification, expressing interest in a consultancy, and tendering, either directly or as a nominated sub-contractor, nominated consultant, nominated manufacturer or supplier, or nominated service provider, in respect of such contract, and (ii) entering into an addendum or amendment introducing a material modification to any existing contract.*

[2] *Inspections in this context usually are investigative (i.e., forensic) in nature. They involve fact-finding activities undertaken by the Investigating Authority or persons appointed by the Procuring Entity to address specific matters related to investigations/audits, such as evaluating the veracity of an allegation of possible Fraudand Corruption, through the appropriate mechanisms. Such activity includes but is not limited to: accessing and examining a firm's or individual's financial records and information, and making copies thereof as relevant; accessing and examining any other documents, data and information (whether in hard copy or electronic format) deemed relevant for the investigation/audit, and making copies thereof as relevant; interviewing staff and other relevant individuals; performing physical inspections and site visits; and obtaining third party verification of information.*

2. FORM OF TENDER SECURITY - DEMAND BANK GUARANTEE

57. Beneficiary:_____ Request for Tenders No:_____ Date:_____ TENDER GUARANTEE No.:___
Guarantor: _____

1. We have been informed that_____(herein after called "the Applicant") has submitted or will submit to the Beneficiary its Tender (herein after called "the Tender") for the execution of _____under Request for Tenders No._____(“the ITT”).

2. Furthermore, we understand that, according to the Beneficiary's conditions, Tenders must be supported by a Tender guarantee.

3. At the request of the Applicant, we, as Guarantor, hereby irrevocably undertake to pay the Beneficiary any sum or sums not exceeding in total an amount of (……..) upon receipt by us of the Beneficiary's complying demand, supported by the Beneficiary's statement, whether in the demand itself or a separate signed document accompanying or identifying the demand, stating that either the Applicant:

   a) Has withdrawn its Tender during the period of Tender validity set forth in the Applicant's Letter of Tender (“the Tender Validity Period”), or any extension there to provided by the Applicant; or

   b) Having been notified of the acceptance of its Tender by the Beneficiary during the Tender Validity Period or any extension thereto provided by the Applicant, (i) has failed to execute the contract agreement, or (ii) has failed to furnish the Performance.

4. This guarantee will expire: (a) if the Applicant is the successful Tenderer, upon our receipt of copies of the contract agreement signed by the Applicant and the Performance Security and, or (b) if the Applicant is not the successful Tenderer, upon the earlier of (i) our receipt of a copy of the Beneficiary's notification to the Applicant of the results of the Tendering process; or(ii)twenty-eight days after the end of the Tender Validity Period.

5. Consequently, any demand for payment under this guarantee must be received by us at the office indicated above on or before that date.

_____
[signature(s)]

3. FORM OF TENDER SECURITY (TENDER BOND) *[The Surety shall fill in*

this Tender Bond Form in accordance with the instructions indicated.] BOND NO.____

1. BY THIS BOND *[name of tenderer]* as Principal (herein after called "the Principal"), and *[name, legal title, and address of surety]*, **authorized to transact business in** *[name of country of Purchaser]*, as Surety (herein after called "the Surety"), are held and firmly bound unto *[name of Purchaser]* as Obligee (herein after called "the Purchaser") in the sum of *[amount of Bond]*[5] *[amount in words]*, for the payment of which sum, well and truly to be made, we, the said Principal and Surety, bind ourselves, our successors and assigns, jointly and severally, firmly by these presents.

2. WHERE AS the Principal has submitted or will submit a written Tender to the Purchaser dated the……..Day of……., 21, for the supply of *[name of Contract]* (herein after called the "Tender").

3. NOW, THEREFORE, THE CONDITION OF THIS OBLIGATION is such that if the Principal:

(a) Has withdrawn its Tender during the period of Tender validity set forth in the Principal's Letter of Tender ("the Tender Validity Period"), or any extension thereto provided by the Principal; or

(b) having been notified of the acceptance of its Tender by the Purchaser during the Tender Validity Period orany extension thereto provided by the Principal; (i) failed to execute the Contract agreement; or (ii) has failed to furnish the Performance Security, in accordance with the Instructions to tenderers ("ITT") of the Purchaser's Tenderingdocument.

then the Surety undertakes to immediately pay to the Purchaser up to the above amount upon receipt of the Purchaser's first written demand, without the Purchaser having to substantiate its demand, provided that in its demand the Purchaser shall state that the demand arises from the occurrence of any of the above events, specifying which event(s) has occurred.

4. The Surety hereby agrees that its obligation will remain in full force and effect upto and including the date 30 days after the date of expiration of the Tender Validity Period set forth in the Principal's Letter of Tender or any extension thereto provided by the Principal.

5. IN TESTIMONY WHEREOF, the Principal and the Surety have caused these presents to be executed in their respective names this day of_____20…….

Principal: _____

Corporate Seal (where appropriate)

_____

(Signature)
(Printed name and title)

Surety:_____

_____

(Signature)
(Printed name and title)

[5] *The amount of the Bond shall be denominated in the currency Kenya shillings or the equivalent amount in a freely convertible currency.*

4. FORM OF TENDER-SECURING DECLARATION

[The Bidder shall complete this Form in accordance with the instructions indicated]

Date:..... *[insert date (as day, month and year) of Tender Submission]*

Tender No.:..... . *[insert number of tendering process]*

To:..... *[insert complete name of*

Purchaser] I/We, the undersigned, declare that:

1. I/We understand that, according to your conditions, bids must be supported by a Tender-Securing Declaration.

2. I/We accept that I/we will automatically be suspended from being eligible for tendering in any contract with the Purchaser for the period of time of [insert number of months or years] starting on [insert date], if we are in breach of our obligation(s) under the bid conditions, because we–(a) have withdrawn our tender during the period of tender validity specified by us in the Tendering Data Sheet; or (b) having been notified of the acceptance of our Bid by the Purchaser during the period of bid validity, (i) fail or refuse to execute the Contract, if required, or (ii) fail or refuse to furnish the Performance Security, in accordance with the instructions to tenders.

3. I/We understand that this Tender Securing Declaration shall expire if we are not the successful Tenderer(s), upon the earlier of:
   a) our receipt of a copy of your notification of the name of the successful Tenderer; or
   b) thirty days after the expiration of our Tender.

4. I/We understand that if I am/we are/in a Joint Venture, the Tender Securing Declaration must be in the name of the Joint Venture that submits the bid, and the Joint Venture has not been legally constituted at the time of bidding, the Tender Securing Declaration shall be in the names of all future partners as named in the letter of intent.

Signed:……..……..

Capacity / title (director or partner or sole proprietor, etc.) …….…….

Name:……..

Duly authorized to sign the bid for and on behalf of: *[insert complete name of*

Tenderer] Dated on……. day of……. *[Insert date of*

signing]

Seal or stamp

5. Appendix to Tender.

Schedule of Currency requirements

Summary of currencies of the Tender for_____*[insert name of Section of the Works]*

Name of currency	*Amounts payable*
Local currency:_____	
Foreign currency #1:_____	
Foreign currency #2:_____	
Foreign currency #3:_____	
Provisional sums expressed in local currency _____	[To be entered by the Procuring Entity]

6. TECHNICAL PROPOSAL

The tender shall complete these sections as a Technical proposal to indicate how he/she intends to proceed with the works. The Procuring entity will review these Proposals and determine the extent to which they meet the required standards to complete the works.

6.1 Site Organization

[insert Site Organization information]

6.2 Method Statement

[insert Method Statement]

6.3 Mobilization Schedule

[insert Mobilization Schedule]

6.4 Construction Schedule

[insert Construction Schedule]

PART 2 - WORKS' REQUIREMENTS

SECTION V - BILLS OF QUANTITIES

SCOPE OF WORKS

The Procuring Entity will prepare this part.

A. Preamble

1. The Bills of Quantities shall be read in conjunction with the Instructions to Tenderers, General and Particular Conditions of Contract, Technical Specifications, and Drawings.

2. The quantities given in the Bills of Quantities are estimated and provisional, and are given to provide a common basis for tendering. The basis of payment will be the actual quantities of work ordered and carried out, as measured by the Contractor and verified by the Engineer and valued at the rates and prices tender in the priced Bills of Quantities, where applicable, and otherwise at such rates and prices as the Engineer may fix within the terms of the Contract.

3. The rates and prices tender in the priced Bills of Quantities shall, except in so far as it is otherwise provided under the Contract, include all Constructional Plant, labor, supervision, materials, erection, maintenance, insurance, profit, taxes, and duties, together with all general risks, liabilities, and obligations set out or implied in the Contract.

4. A rate or price shall be entered against each item in the priced Bills of Quantities, whether quantities are stated or not. The cost of Items against which the Contractor has failed to enter a rate or price shall be deemed to be covered by other rates and prices entered in the Bills of Quantities.

5. The whole cost of complying with the provisions of the Contract shall be included in the Items provided in the priced Bills of Quantities, and where no Items are provided, the cost shall be deemed to be distributed among the rates and prices entered for the related Items of Work.

6. General directions and descriptions of work and materials are not necessarily repeated nor summarized in the Bills of Quantities. References to the relevant sections of the Contract documentation shall be made before entering prices against each item in the priced Bills of Quantities.

7. Provisional Sums included and so designated in the Bills of Quantities shall be expended in whole or in part at the direction and discretion of the Engineer in accordance with Sub-Clause 13.5 and Clause 13.6 of the General Conditions.

8. The method of measurement of completed work for payment shall be in accordance with *[insert the name of a standard reference guide, or full details of the methods to be used]* [6].

B. Work Items

1. The Bills of Quantities usually contains the following part Bills, which have been grouped according to the nature or timing of the work:

Bill No. 1: General Items;
Bill No. 2: Earthworks;
Bill No. 3: Culverts and Bridges;
Bill No. 4: etc., as required;
Daywork Schedule; and
Summary Bills of Quantities.

2. If TDS-ITT 15.1 (a) applies, Tenderers shall price the Bills of Quantities in local currency only and shall indicate in the Appendix to Tender the percentage expected for payment in foreign currency or currencies. If TDS-ITT 15.1 (b) applies Tenderers shall price the Bills of Quantities in the applicable currency or currencies.

BILL OF QUANTITES

ROAD SECTION: MASALANI– IJARA (C-256) ROAD.					
ROAD CODE: C-256					
PACKAGE: KeRRA/011/GSA/39/077/2020-21					
	BILL OF QUANTITES				**Page: 1**
BILL NO:					
ITEM NO.	**DESCRIPTIONS**	**Unit**	**Quantities**	**Unit bid rate(Kshs)**	**Amount (Kshs)**
04-50-003	Heavy Bush clearing.	M2	396,000.00		
	Total carried Forward to Summary				

ROAD SECTION: MASALANI– IJARA (C-256) ROAD.					
ROAD CODE: C-256					
PACKAGE: KeRRA/011/GSA/39/077/2020-21					
	BILL OF QUANTITES				**Page: 2**
BILL NO:					
ITEM NO.	**DESCRIPTIONS**	**Unit**	**Quantities**	**Unit bid rate(Kshs)**	**Amount (Kshs)**
05-50-006	Fill in Soft Material and compact as directed by the engineer.	M3	1,425.00		
05-50-008	Cut to Fill in Soft Material as directed by the engineer.	M3	1,000.00		
	Total carried Forward to Summary				

ROAD SECTION: MASALANI– IJARA (C-256) ROAD.					
ROAD CODE: C-256					
PACKAGE: KeRRA/011/GSA/39/077/2020-21					
	BILL OF QUANTITES				**Page: 3**
BILL NO:					
ITEM NO.	**DESCRIPTIONS**	**Unit**	**Quantities**	**Unit bid rate(Kshs)**	**Amount (Kshs)**
10-50-001	Heavy grading without watering or compaction as instructed by the engineer.	M2	118,800.00		
10-60-001	Provision of gravel wearing course as instructed by the engineer.	M3	1,560.00		
	Total carried Forward to Summary				

ROAD SECTION: MASALANI– IJARA (C-256) ROAD.		
ROAD CODE: C-256		
PACKAGE: KeRRA/011/GSA/39/077/2020-21		
	BILL OF QUANTITES	**Page: 4**
	SUMMARY	**Project:**
ITEM NO.	**DESCRIPTIONS**	**Amount (Kshs)**
4	SITE CLEARANCE.	
5	EARTHWORKS	
10	GRADING AND GRAVELLING WORKS	
	Sub-Total:	
	VAT @ 16 %	
	\ **Total**	
	Contingencies (@ 0 %)	
	CARRIED TO PAGE ON THE FORM OF TENDER:	

SECTION VI - SPECIFICATIONS

[In drafting of the Specification, care must be taken when drafting the Work's Requirements to ensure that the requirements are not restrictive. Recognized international standards should be used as much as possible for the description of goods, materials and workmanship. Where other particular standards are specified, whether national standards or other standards, it should be stated that goods, materials and workmanship meeting other authoritative standards and which promise to ensure equal or higher quality than the standards specified, will also be acceptable. Where a brand name of a productis specified it should always be qualified with the terms "orequivalent".]

59. Notes for preparing Specifications

1. Specifications must be drafted to present a clear and precise statement of the required standards of materials, and workmanship for tenderers to respond realistically and competitively to the requirements of the Procuring Entity and ensure responsiveness of tenders. The Specifications should require that all materials, plant, and other supplies to be permanently incorporated in the Works be new, unused, of the most recent or current models, and incorporating all recent improvements in design and materials unless provided otherwise in the Contract.Where the Contractor is responsible for the design of any part of the permanent Works, the extent of his obligations must be stated.

2. Specifications from previous similar projects are useful and may not be necessary to re-write specifications for everyWorks Contract.

3. There are considerable advantages in standardizing **General Specifications** for repetitive Works in recognized public sectors, such as highways, urban housing, irrigation and water supply. The General Specifications should cover all classes of workmanship, materials and equipment commonly involved in constructions, although not necessarily to be used in a particular works contract. Deletions or addenda should then adapt the General Specifications to the particular Works.

4. Care must be taken in drafting Specifications to ensure they are not restrictive. In the Specifications of standards for materials, plant and workmanship, existing Kenya Standards should be used as much as possible, otherwise recognized international standards may also be used.

5. The Procuring Entity should decide whether technical solutions to specified parts of the Works are to be permitted. Alternatives are appropriate in cases where obvious (and potentially less costly) alternatives are possible to the technical solutions indicated in tender documents for certain elements of the Works, taking into consideration the comparative specialized advantage of potential tenderers.

6. The Procuring Entity should provide a description of the selected parts of the Works with appropriate reference to Drawings, Specifications, Bills of Quantities, and Design or Performance criteria, stating that the alternative solutions shall be atleast structurally and functionally equivalent to the basic design parameters and Specifications.

7. Such alternative solutions shall be accompanied by all information necessary for a complete evaluation by the Procuring Entity, including drawings, design calculations, technical specifications, breakdown of prices, proposed construction methodology, and other relevant details. Technical alternatives permitted in this manner shall be considered by the Procuring Entity each on its own merits and independently of whether the tenderer has priced the item as described in the Procuring Entity's design included with the tender documents.

SECTION 11: SPECIAL SPECIFICATIONS

TABLE OF CONTENTS

101 Special Specifications. 72
102 Location and Extent of Site. 72
103 Extent of Contract. 72
104 Programme of Execution of the Works 72
105 Order of Execution of Works 72
107 Taking over Certificate 72
109 Notice of Operations 73
117 Health, Safety and Accidents 73
121 Diversion of Services 73
123 Liaison with Government and Police Officials 73
124 Land For All Camps Sites And For The Contractor's Own Purposes, Including Temporary Works. 73
125 Water Supply 74
128 Storage of Materials 74
129 Test Certificates 74
131 Signboards 74
132 Housing Accommodation for the Resident Engineer and His Staff and Office Furniture **Error! Bookmark not defined.**
132.1 Housing and Accommodation for the Engineer's Senior Staff **Error! Bookmark not defined.**
132.2 Housing Accommodation for Engineer's Junior Staff **Error! Bookmark not defined.**
132.3 List of Furniture for Engineer's Staff Houses **Error! Bookmark not defined.**
132.4 Main Office **Error! Bookmark not defined.**
132.5 Engineer's Laboratory and Survey Equipment **Error! Bookmark not defined.**
137 Attendance upon the Engineer and His Staff 74
138 Vehicles and Drivers for the Engineer and His Staff and Method of Payment **Error! Bookmark not defined.**
139 Receipted Accounts 75
142 Liquidated Damages 75
301 SETTING OUT 78

SECTION 4- SITE CLEARANCE AND TOP SOIL STRIPPING 79
401 Site Clearance 79
402 Removal of Topsoil 79
403 Removal of Structures, Fences and Obstructions 79

SECTION 5 - EARTHWORKS 80
504 Preparation Prior To Forming Embankment 80
505 Construction of Embankments 80
508 Compaction of Earthworks 80
511 Borrow Pits 81
517 Measurement and Payment 81

SECTION 6 - QUARRIES, BORROW PITS, STOCKPILES AND SPOIL AREAS 82
601 General 82

SECTION 7 - EXCAVATION AND FILLING FOR STRUCTURES 83
703 Excavation of Foundations for Structures 83
707 Backfilling for Structures 83
709 Excavations for River Training and New Water COURSES 83

710 Stone Pitching 83
711 Gabions 84
712 Rip-Rap Protection Work 84
714 Backfill below Structures 84

SECTION 8 - CULVERTS AND DRAINAGE WORKS 85
801 Scope of Section 85
804 Excavation for Culverts and Drainage Works 85
805 Excavation in Hard Material 85
809 Bedding and Laying Of Pipe Culverts 86
810 Jointing Concrete Pipes 86
812 Backfilling Over Pipe Culverts 86
814.1 Subsoil Drains 86
814.2 Filter Fabric to Subsoil Drains 86
815 Invert Block Drains and Half Round Channels 86
817 Repairs to Drains 86
818 Scour Checks 87
819 Cleaning And Maintenance 87

SECTION 9 - PASSAGE OF TRAFFIC 88
901 Scope of the Section 88
904 CONSTRUCTION OF DEVIATIONS 88
906 Passage of Traffic through the Works 89
907 Signs, Barriers and Lights 89
909 Assistance to Public 89
912 Measurement and Payment 89

SECTION 10 – MATERIAL REQUIREMENTS FOR GRAVEL WEARING COURSE 90

SECTION 17 – CONCRETE WORKS 97

SECTION 20 - ROAD FURNITURE 104
2001 ROAD RESERVE BOUNDARY POSTS 104
2003 EDGE MARKER POSTS 104
2004 PERMANENT ROAD SIGNS 104
2004B EXISTING ROAD SIGNS 104
2005 ROAD MARKING 104
2006 GUARDRAILS 104
2008 KILOMETRE MARKER POSTS 105
2009 RUMBLE STRIPS 105
2010 BOLLARDS 105
2102 TESTING OF BRIDGE BEARINGS 106
2104 STEEL PARAPETS ON BRIDGE DECKS 106
2106 SURFACING TO BRIDGES 106
2105 EXPANSION JOINTS 106

SECTION 22-DAYWORKS 110
2202 MEASUREMENTS AND PAYMENT 110

SECTION 1 - GENERAL

101 Special Specifications.

Special specification is supplementary to the Standard Specifications and the two must be read in conjunction. In any case where there appears to be conflict between the two then the Special Specifications will take precedence

102 Location and Extent of Site.

The proposed bridge is located in Narok County. The Bridge lies on Erusai River on Siyapei – Sankale Road (D1684)

The proposed bridge lies across a perennial River. The road traverses rolling terrain with the main economic activity being, maize farming in addition to livestock being reared in the community.

103 Extent of Contract.

The Major Works to be executed under the Contract comprise mainly of but are not limited to the following:

1. Site clearance where necessary.
2. Substructure works which comprise 2No. Abutments
3. Construction of reinforced concrete approach slabs
4. Construction of 15m bridge involving concrete slab and concrete beams as shall be instructed by the Engineer.
5. Construction of approach roads to Gravel standards.
6. River Training as directed by the Engineer.
7. Installation of protection works.

It shall be the contractor's responsibility to construct all works in conformity with the latest revision, amendments or superseding drawings current at the time of construction of such works.

104 Programme of Execution of the Works

The contractor shall provide the works programme, required under clause 14 of the Conditions of Contract, within 28 days of receipt of the Engineer's Order to commence work.

The programme shall be co-ordinated with climatic and other conditions to provide for the completion of the works in the order and by the time specified.

The Contractor shall carry out the contract in accordance with the programme agreed with the Engineer, but he shall in no manner be relieved by the Engineer's approval of the programme, of his obligation to complete the works in the prescribed order and by the prescribed completion date and he shall from time to time review his progress and make such amendments to his rate of execution of the works as may be necessary to fulfil his obligations.

105 Order of Execution of Works

In addition to Clause 105 of the Standard Specification the Contractor shall carry out the Works such that a continuous and consecutive output of fully completed work is achieved.

107 Taking over Certificate

Taking over certificate shall be issued upon completion of construction of the bridge and the approach roads to the bridge.

108 METHOD OF CONSTRUCTION AND HOURS OF ATTENDANCE BY THE ENGINEER'S REPRESENTATIVE ON SITE

At the commencement of the contract the Contractor will submit in writing to the Engineer, the hours which shall be considered normal working hours, together with the day of the week to be set aside for rest. When approved these shall be maintained throughout the continuance of the Contract.

Notwithstanding the provision of the last paragraph of clause 108 of the Standard Specification, the Engineer's Representative normal working hours shall be defined as 8.00 a.m. to 5.00 p.m. on weekdays and excluding lunch hour and 8.00 a.m. to 01.00 p.m. on Saturdays. Sundays will be set aside for rest. If the Contractor wishes to execute permanent works outside these hours, he shall meet any extra costs arising thereof in addition to giving a day's notice in writing. In this respect the salaries of the Engineer's junior staff, involved in the overtime supervision shall be paid to with an overhead of 65%.

109 Notice of Operations

Add the following sub- Clause.

Notification Terms

It shall be the Contractor's responsibility to notify the Engineer when any item of works scheduled are completed and ready for approval, and the contractor shall give sufficient notice to allow control test to be performed.

Explosive and Blasting

(a) The requirements of the Laws of Kenya governing explosives and other requirements and regulations of Government of Kenya and other authorities shall be complied with.
(b) No explosives of any kind shall be used without prior written consent of the Engineer.
(c) The Contractor shall be solely responsible for the provision, handling, storage and transporting of all explosives, ancillary materials and all other items of related kind whatsoever required for blasting.

117 Health, Safety and Accidents

Insert Sub-clause (i):

In accordance with the laws of Kenya, the Contractor shall make arrangement for awareness programme for public health education and particularly for HIV/AIDS as detailed under Section 26 of this specification.

121 Diversion of Services

a) The Contractor shall acquaint himself with the location of all existing services such as telephone lines, electricity cables, water pipes, sewerlines etc., before execution of any works that may affect the services. The cost of determining the location of the existing services together with making good or repairing of any damage caused all to the satisfaction of the Engineer shall be included in the BID rates.
b) Subject to the agreement with the Engineer, the Contractor shall be responsible for removal of alteration and relocation of existing services.
c) The Contractor shall indemnify the Employer against claims originating from damage to existing services or works.

123 Liaison with Government and Police Officials

The Contractor shall keep in close touch with the Police and the other Government officials of the area regarding their requirements in the control of traffic, or other matters, and shall provide all assistance or facilities, which may be required by such officials in the execution of their duties.

124 Land For All Camps Sites And For The Contractor's Own Purposes, Including Temporary Works.

Notwithstanding Clause 124 of the Standard Specification all requirements of land for temporary works

and construction purposes shall be to the approval of the Engineer but the Contractor will make all necessary arrangements with the property owners concerned and pay all charges arising there from. On or before completion of the Contract, the Contractor shall remove all temporary works and shall restore all such land to the condition in which it was immediately prior to the occupation thereof as far as is reasonable and practicable. No separate payment will be made to the Contractor on account of these items and the Contractor must make due allowance for them in his rates.

Notwithstanding Clause 120 of the Standard Specifications, the Contractor shall be required to appoint competent surveyors who will liaise with the Engineer on matters related to the demarcation of the existing road reserve, site measurements, removal and reinstatement of existing services.

125 Water Supply

The water source proposed for the project road is the Moiben River. However, it should be known that the source is used by the local communities and as such the Contractor will be required to make appropriate arrangements with the local communities before their use.

Notwithstanding the above limitations, the contractor is expected to supply clean water as in indicated in clause 125 of standard specification and take due consideration of these in his rates.

126 MATERIALS AND MANUFACTURED ARTICLES

Notwithstanding the provision of Clause 126 of the Standard Specifications, the contractor's attention is drawn to his obligation with regard to quality and delivery schedule of materials and goods obtained from suppliers. Should the Engineer at any time be dissatisfied with any goods and materials intended for use or used by the contractor upon the works, he shall be empowered to reject such goods and materials and shall order that they be replaced by others of acceptable quality. Any more work that may consequently have to be redone and the cost thereof or the new supplies shall all be borne by the contractor.

128 Storage of Materials

All materials shall be stored on Site in a manner approved by the Engineer and the Contractor shall carefully protect from the weather all work and materials which may be affected thereby.

129 Test Certificates

When instructed by the Engineer the Contractor shall submit certificates of test from the suppliers of materials and goods required in connection with the works as the Engineer may require.

Such certificates shall certify that the materials or goods concerned have been tested in accordance with the requirements of the specifications and shall give the results of all the tests carried out. The Contractor shall provide adequate means of identifying the materials and goods delivered to the site with the corresponding certificates.

131 Signboards

The Contractor shall provide and erect two (2) publicity signboards on the site as directed. The Engineer shall, as shown in the Drawings, direct the minimum dimensions of the boards. The boards shall be prepared, primed and painted cream and lettered in black. The boards shall be of stout construction, resistant to the effects of weather.

137 Attendance upon the Engineer and His Staff

The Contractor shall pay wages (including all overtime) use all attendant staff to fulfil the requirements of Clause 137 of the Standard Specification. The Contractor will be paid on a prime cost basis plus a percentage for overheads and profits under appropriate items in the Bills of Quantities.

139 Receipted Accounts

The Contractor maybe instructed by the Engineer to make payments of general miscellaneous accounts for such items as stationery, stores and equipment and miscellaneous supervision personnel and claims or the Engineer may direct the Contractor to purchase or pay for the above. The Contractor will be paid on a prime cost basis plus a percentage for overheads and profits under appropriate items in the Bills of Quantities.

142 Liquidated Damages

Liquidated damages at the rate per day specified in the Appendix to the Form of Bid shall apply in the event of the works not being completed within the time for completion plus any extension of time which may be determined by the Engineer.

143 Environmental Protection

The Contractor shall comply with the Statutory Regulations in force in Kenya regarding environmental protection and waste disposal, and shall liaise with the National Environmental Management Agency (NEMA).

Within four (4) weeks of the order to commence work, the Contractor shall prepare and submit a specific Environmental Management Plan for the project and his operations, relating to the approved Environmental Impact Assessment. The Environmental Management Plan shall outline potential environmental hazards and risks, and provide an action plan to deal with the hazards, minimise the risks, and mitigate adverse environmental impacts, and include a general decommissioning plan covering all relevant aspects of the project. The Environmental Management Plan shall identify monitoring indicators and reporting requirements.

The Contractor shall be required to submit environmental progress reports to the Engineer every three (3) months.

The Contractor shall ensure so far as is reasonably practicable and to the satisfaction of the Engineer; that the impact of the construction on the environment shall be kept to a minimum and that appropriate measures are taken to mitigate any adverse effects during the construction.

(a) The Contractor shall exercise care to preserve the natural landscape and shall conduct his construction operations so as to prevent any unnecessary destruction, scarring, or defacing of the natural surroundings in the vicinity of the work. Except where clearing is required for permanent works, all trees, native shrubbery, and vegetation shall be preserved and shall be protected from damage by the Contractor's construction operations and equipment. All unnecessary destruction, scarring, damage or defacing resulting from the Contractor's operations shall be repaired, replanted, reseeded or otherwise corrected as directed by the Engineer, and at the Contractor's expense.

(b) The Contractor shall ensure that measures are in place to control soil erosion and water pollution, by use of berms, dykes, silt fences, brush barriers, dams, sediment basins, filter mats, netting, gravel, mulches, grasses, slope drains, contour banks, and other erosion control devices and methods. Temporary erosion control provisions shall be coordinated with permanent erosion control features to assure economical, effective and continuous measures throughout the period of the works. The Contractor's attention is drawn to the requirements of Clause 502, in that works need to be progressively finished so that permanent vegetation can establish quickly to mitigate soil erosion and erosion of drains.

(c) The Contractor shall provide all the labour, equipment, materials, and means required and

shall carry out proper and efficient measures wherever and as often as necessary to minimise the dust nuisance.

(d) The Contractor shall comply with all applicable Kenyan laws, orders and regulations concerning the prevention, control and abatement of excessive noise. Blasting, use of jackhammers, pile driving, rock crushing, or any other activities producing high-intensity impact noise may be performed at night only upon approval of the Engineer.

(e) Immediately after extraction of materials, all borrows pits shall be backfilled to the satisfaction of the Engineer. In particular, borrow pits near the project road shall be backfilled in such a way that no water collects in them.

(f) Spilling of bitumen fuels Oils and other pollutants shall be cleared up.

(g) The Contractor's attention is drawn to the requirements of the Standard Specification in regard to the environment and in particular to the following clauses:

Clause 115: Construction Generally

Clause 116: Protection from Water

Clause 136: Removal of Camps

Clause 605: Safety and Public Health Requirements Clause

Clause 607: Site Clearance and Removal of Topsoil and Overburden

(h) Payment in respect of this Clause will be under appropriate items in the BoQ

SECTION 2 - MATERIALS AND TESTING OF MATERIALS

All materials testing shall be in accordance with Section 2 of the Standard Specifications.

SECTION 3 - SETTING OUT & TOLERANCES

301 SETTING OUT

a) In addition to the provisions of clause 3.01(a) if the traverse points to be used for the setting out are close to the existing carriageway and interfere with construction works then the Contractor will have to relocate them to a location where they will not be disturbed. The co-ordinates and heights of all traverse points so located shall be listed and provided to the Engineer for checking and/or approval. Contractor shall also monument the new centreline every 200m along straight and all salient points along curves by a pin in the concrete beacon before commencement of any works.

The road reserve boundary posts shall have 12mm diameter steel pins embedded in concrete, 200mm long with 25mm exposed to the air, sticking out form its top surface. This pin shall be co-ordinated and heighted and result of the same shall be provided to the Engineer for approval. Cost of these works shall be included in the rates as no separate item has been provided.

Commencement of the works shall not be permitted until this basic survey data has been provided and approved by the Engineer.

b) Detailed Setting Out

Reference pegs shall be 50mm by 50mm in section 600mm long driven 400mm firmly into ground and painted white above the ground. The offset from centre line shall be indicated by small nail 20mm to 25mm long with its head driven flush with the top of the peg.

Chainages, offset and reference elevation shall be clearly indicated to the sides of the peg to the satisfaction of the Engineer.

After cutting of benches and prior to commencement of earthworks or subgrade works, Contractor shall take cross-sections again and submit the copy of the same to Engineer for agreement. These cross-sections shall then be used as basis of measurement for all subsequent layers, unless otherwise stated.

SECTION 4- SITE CLEARANCE AND TOP SOIL STRIPPING

401 Site Clearance

Site Clearance shall be carried out as directed by the Engineer.

402 Removal of Topsoil

Topsoil shall include up to 200mm depth of any unsuitable material encountered in existing or newly constructed drains, drainage channels, and accesses.

403 Removal of Structures, Fences and Obstructions

When instructed by the Engineer, the Contractor shall demolish or remove any structure and payment for this shall be made on day works basis.

SECTION 5 - EARTHWORKS

504 Preparation Prior To Forming Embankment

Where benching is required for existing pavement to accommodate earthworks subgrade or subbase for widening the road, the rate for compaction of existing ground shall be deemed to cover this activity.

Excavations shall be kept dry. In the event of water penetrating the underlying layer, construction of the subsequent layers shall be postponed until the underlying layers are dry enough to accommodate the construction plant without deforming or otherwise showing distress.

Step construction shall be carried out per layer at the joint where excavating both vertically and perpendicular to the direction of the travel. The step shall be 500mm perpendicular to the direction of the travel and 150mm vertical unless otherwise instructed by the Engineer.

Special care shall be taken when compacting new material at the joint ensuring that specified density is achieved.

505 Construction of Embankments

Only material approved by the Engineer shall be used for fill in embankments.
Material with high swelling characteristics or high organic matter content and any other undesirable material shall not be used, unless specifically directed by the Engineer. Unsuitable material shall include:

(i) All material containing more than 5% by weight or organic matter (such as topsoil, material from swamps, mud, logs, stumps and other perishable material)

(ii) All material with a swell of more than 3% (such as black cotton soil)

(iii) All clay of plasticity index exceeding 50.

(iv) All material having moisture content greater than 105% of optimum moisture content (Standard Compaction)

Subgrade: Shall mean upper 300mm of earthworks either insitu or in fill and subgrade shall be provided for as part of earthworks operation and payment shall be made as "fill". The material for subgrade shall have a CBR of not less than 8% measured after a 4 day soak in a laboratory mix compacted to a dry density of 100% MDD (AASHTO T99) and a swell of less than 1%.

Subgrade repair: Where directed by the Engineer, any localized failure in the subgrade shall be repaired by filling in selected soft, hard or natural of minimum CBR 30% and compacted in accordance with clauses in the specifications applying to normal subgrade.

Embankment repair:

Where directed by the Engineer, any localized filling in soft, hard or natural; selected material requirements shall be executed in accordance with Clause 505.

508 Compaction of Earthworks

At pipe culverts, all fill above ground level around the culverts shall be compacted to density of 100% MDD (AASHTO T.99) up to the level of the top of the pipes or top of the surround(s), if any and for a

width equal to the internal diameter of the pipe on either side of the pipe(s) or surround(s) as applicable.

At locations adjacent to structures, all fill above ground level up to the underside of the subgrade shall be compacted to density of 105% MDD (AASHTO T.99). In case of fill around box culverts this should be carried out for the full width of the fill and for a length bounded by the vertical plane passing through the ends of the wing walls.

Notwithstanding the provision of clause 503 of the standard Specification, Compaction of subgrade material (i.e. material immediately below formation) in cut areas shall not be carried out by the contractor in areas where the formation is formed in hard material, unless specific instructions to the contrary are issued by the Engineer.

Where improved sub-grade material shall be required, this shall be compacted and finished to the same standards and tolerances as those required for normal subgrade and clauses in the specifications applying to normal subgrade shall also apply.

511 Borrow Pits

The first part of the Standard Specification is amended as follows:-

Fill material which is required in addition to that provided by excavation shall be obtained from borrow pits to be located and provided by the Contractor but to the approval of the Engineer contrary to what has been stated.

517 Measurement and Payment

Notwithstanding the provisions of clause 517 of the Standard Specifications, the rate for compaction of fill in soft material shall allow for the requirements of clause 508 of the special specification and no extra payment shall be made for compaction around pipe culverts (100% MDD AASHTO T.99).

SECTION 6 - QUARRIES, BORROW PITS, STOCKPILES AND SPOIL AREAS

601 General

Notwithstanding any indications to the contrary in the Standard Specification the Engineer will not make available to the Contractor any land for quarries, borrow pits, stockpiles and spoil areas, except for those areas in road reserves specifically approved by him.

The contractor will be entirely responsible for locating suitable sources of materials complying with the Standard and Special Specifications, and for the procurement, Wining, haulage to site of these materials and all costs involved therein. Similarly the contractor will be responsible for the provision and costs involved in providing suitable areas for stockpiling materials and spoil dumps. Should there be suitable sites for spoil dumps or stockpiles within the road reserve forming the site of the works the Contractor may utilise these subject to the approval of the Engineer.

No additional payment will be made to the Contractor to cover costs arising from the requirements for this Clause and the Contractor must include these costs in the rates inserted into the Bills of Quantities.

SECTION 7 - EXCAVATION AND FILLING FOR STRUCTURES

703 Excavation of Foundations for Structures

Unless otherwise instructed by the Engineer, all excavated surfaces in material other than hard material, on which foundations for structures shall be placed, shall be compacted to 100% MDD (AASHTO T.99) immediately before structures are constructed.

Paragraph 4, last line: - Replace "95%" with "100%".

704: PROTECTIONS FROM WATER

704(a) Scope of work

The contractor shall be responsible for dealing with water whether from existing drainage systems, water courses, underground springs, precipitation or any other source or cause. The contractor shall provide all dams, cofferdams, pumping, piling, shoring, temporary drains, sumps etc required for the purposes of dealing with water.

704(b) Measurement and Payment

The provision of water exclusion methods shall be considered as temporary works and incidental to other works such as excavation to foundations, fixing of steel and concreting.

No separate measurements and payments shall be made for the provision of those works.

707 Backfilling for Structures

Unless otherwise instructed by the Engineer, all backfilling material shall be compacted to a minimum of 100% MDD (AASHTO T.99).

709 Excavations for River Training and New Water COURSES

Payments for river training and establishment of new watercourses shall only be made where such work constitute permanent works. Works done for road deviation or other temporary works shall not qualify for payment.

710 Stone Pitching

Stone pitching to drains, inlets and outlets of culverts to embankments and around structure shall consist of sound un weathered rock approved by the Engineer.
The stone as dressed shall be roughly cubical in shape with minimum dimensions of 150 x 150mm for normal thickness of stone pitching. Grouting will be done for all stone pitching areas and the top line of the stone pitching should be grouted/sealed with concrete class 15/20.

The surface to receive the pitching shall be compacted and trimmed to slope and the stone laid, interlocked and rammed into the material to give an even finished surface. Soil erosion is rampant along the project location and this can be minimised by ensuring that proper protection works is carried out along the drains using stone pitching. Most of the sections shall be stone pitched especially areas where we have steep slopes to minimise undermining of the road by rain water or as may be instructed by the Engineer.

In areas where stone pitching has been damaged, the Contractor shall identify such areas and notify the Engineer for his agreement of the extent of the Works required and his approval and instructions to proceed with the Works. Stone Pitching Repair and Reconstruction shall be carried out in accordance with Clause 710 of the Standard Specifications.

711 Gabions

Where instructed by the Engineer the Contractor will install gabions as protection works to washout areas or bridge Piers and or Abutments. Gabions shall be constructed in accordance with Clause 711 of the Standard Specification.

In cases where existing gabions have been damaged, the Contractor shall identify them and notify the Engineer for his agreement of the extent of the Work required and his approval and instructions to proceed with the Works.

The Works shall involve removal of the damaged gabions / rocks, excavation to the correct levels and grades as directed by the Engineer, and in accordance with Clause 711 of the Standard Specifications and reconstruction with new gabions and other necessary materials as necessary.

712 Rip-Rap Protection Work

Quarry waste or similar approved material shall be used to backfill scoured and eroded side, outfall and cut-off drain. The material shall be compacted to form a flat or curved surface preparatory to stone pitching of drainage channels, existing and new scour checks as directed by the Engineer.

The surface to receive the pitching shall be compacted and trimmed to slope and the stone hand laid, interlocked and rammed into the material to give an even finished surface. The interstices of the Pitching shall be rammed with insitu material. The insitu material immediately behind the pitching shall be compacted to minimum density of 100% MDD compaction (AASHTO T.99)

714 Backfill below Structures

Where instructed this shall be carried out in compliance with the requirements of Clause 507 and 804 of the Standard Specification.

The rock fill shall be placed in layers not less than 0.50 m in compacted thickness, each compacted to refusal by vibrating roller, finished with non-plastic fines as specified in the standard specification till all voids in the layer have been filled which will be indicated by appearance of no more swallow holes under vibrating roller at refusal, prior to placing of the next layer all to Engineer's approval.

SECTION 8 - CULVERTS AND DRAINAGE WORKS

801 Scope of Section

The operations specified in this section apply to the installation of drainage works and reinstatement and improvement of the same.

In addition, this Section covers: -

- Installation of 600mm, 900mm and 1200mm diameter pipe culverts

- Construction of associated inlet and outlet structures to specifications and/or instructions

804 Excavation for Culverts and Drainage Works

In the Standard Specifications, make the following amendments: -

(a) In paragraph 6, line 3, and in paragraph 7, line 5 and in paragraph 11, line 6, delete "95%" and insert "100%".

(b) Removal of Existing Pipe Culverts

Where instructed by the Engineer, the Contractor shall excavate and remove all existing blocked or collapsed culvert pipes of 450mm, 600mm and 900mm diameter including concrete surround, bedding, inlet and outlet structure.

The void left after removal of culvert pipes shall be widened as necessary to accommodate new concrete bedding, pipe and haunching.
The payment of this work shall be per linear metre of pipes removed. The void left by removal of these pipes shall be carefully preserved in order to accommodate replacement 1200mm or 900mm diameter pipe culverts as shall be directed by the Engineer.

(c) Removal of other Existing Drainage Structures
When instructed by the Engineer, the Contractor shall demolish or remove any other structure and payment for this shall be made on day work basis.

(d) Excavation for Culverts and Drainage Works
The Contractor shall carry out all excavations for new culverts and drainage works to the lines, levels, inclinations, and dimensions shown on the drawings or as instructed by the Engineer.

805 Excavation in Hard Material

In the Standard Specifications, Sub-clauses 805(a) and 805 (b) delete "95%" and insert "100%".

In sub-clause 809(a), paragraph 1, line 1, substitute "95%" with "100%".

In sub-clause 809(c), paragraph 2, line 4, between the words "compacted" and "and shaped" insert the words "to 100% MDD (AASHTO T.99)".

Hard material is material that can be excavated only after blasting with explosives or barring and wedging or the use of a mechanical breaker fitted with a rock point in good condition and operated correctly. Boulders of more than 0.2m^3 occurring in soft material shall be classified as hard material.

809 Bedding and Laying Of Pipe Culverts

Concrete pipes shall be laid on a 150mm thick concrete bed of class 15/40 and the pipes shall be bedded on 1:3 cement: sand mortar at least 50mm thick, 150mm wide and extending the full length of the barrel.

The rates inserted shall allow for compaction of the bottom of excavation to 100% MDD (AASHTO T.99).

810 Jointing Concrete Pipes

The concrete pipes for the culverts shall have ogee joints and will be joined by 1:2 cement: sand mortar and provided with fillets on the outside as described in clause 810 of the Standard Specification.

812 Backfilling Over Pipe Culverts

In the Standard Specifications, clause 812

1). Delete paragraph 6 "for pipe culverts ….. depth of 150mm", entirely.

2). Wherever the expression "dry density of 95% MDD (AASHTO T. 99)" occurs delete and replace with "dry density of 100% MDD (AASHTO T.99)".

The rates entered for laying of pipe culverts shall allow for backfilling to pipe culverts and compacting to 100% MDD (AASHTO T.99) and these works shall **not** be measured and paid for separately.

814.1 Subsoil Drains

In the event of excavation for repairs exposing local seepage, springs or unacceptably high water table, the Engineer may instruct the provision of counter fort or French drains.

These drains shall consist of a trench excavated to the alignment, width, depth and gradient instructed by the Engineer, and backfilled with approved compacted clean hard crushed rock material as specified in clause 815 of the standard specification. Where these drains lie within the carriageway the carriageway shall be reinstated with compacted stabilised gravel and surfaced with hot asphalt or a surface dressing as instructed by the Engineer.

814.2 Filter Fabric to Subsoil Drains

A filter fabric shall be placed under, around and over rock fill of the subsoil drains. The provisions and placing of the fabric shall be in accordance with manufacturer's instructions and complying with Clause 804 and 814 of the Standard Specification. Payment shall be in metre square of the fabric used.

815 Invert Block Drains and Half Round Channels

Invert Block Drains and Half Round Channels shall be constructed as shown in the drawings provided in accordance with the Standard Specifications where directed by the Engineer.

817 Repairs to Drains

817.1 Cleaning and Repair of Existing Drains

In areas of existing side drains, mitre or outfall drains where such are blocked, the Engineer shall instruct the Contractor to clean and clear the drains to free flowing condition.

The work shall consist of:

(a) Stripping and removal of any extraneous material to spoil including vegetation and roots in the drains to the satisfaction of the engineer.
(b) Spreading of any spoil to the satisfaction of the Engineer.
(c) Shaping the drains to free flowing condition as directed by the Engineer.

Measurement and Payment for cleaning drains shall be by linear metre of drain cleaned measured as the product of plan area and vertical depth of extraneous material instructed to be removed. No extra payment will be made for removal of vegetation and roots.

817.2 Channels

The Engineer may instruct that the Contractor provides open channels in place of existing subdrains where the latter may be damaged or in any other place. The rates entered by the Contractor in the bills of quantities must include for removal and disposal of any subdrain material, excavation to line and level, backfilling and compaction as directed by the engineer. The channels shall be constructed of precast class 20/20 concrete of minimum 80mm thickness and lengths or widths not exceeding 1000mm. Joints shall be at least 15mm wide filled with 1:2 cement sand mortar.

817.3 Spoil Material

The contractor shall be responsible for removal from site of all materials excavated in the course of undertaking works in this section of the specification, unless suitable for re-use, and deposit of the material in a spoil dump to be approved by the Engineer.

818 Scour Checks

Scour checks are to be constructed in mass concrete in accordance with clause 818 of the standard Specifications and the drawings as shall be provided.

819 Cleaning And Maintenance

819.1 De-silting of Pipe Culverts

Where instructed, the Contractor shall de-silt the existing pipe culverts by removing all the material from the pipe to make them clean and free flowing.

Measurement and payment shall be by the linear metres of pipes de-silted, regardless of diameter size.

SECTION 9 - PASSAGE OF TRAFFIC

901 Scope of the Section

The Contractor shall so arrange his work to ensure the safe passage of the Traffic at all times and if necessary construct and maintain an adequate diversion for traffic complete with all the necessary road traffic signs.

The Contractor shall provide to the satisfaction of the Engineer adequate warning signs, temporary restriction signs, advance warning signs, barriers, temporary bumps and any other device and personnel equipped with two way radios to ensure the safe passage of traffic through the works.

When carrying out the Works the Contractor shall have full regard for the safety of all road users.

The Contractor shall also provide sign posts and maintain to the satisfaction of the Engineer all deviations necessary to complete the works. The contractor should allow for the costs of complying with the requirements of this clause in his rates.

The contractor will be deemed to have inspected the site and satisfied himself as to the adequacy of his bid for these works and no additional payments will be made to the Contractor for any expenditure on traffic control or the provision of deviations. The employer shall not be liable for inadequate prior investigations of this nature by the Contractor.

904 CONSTRUCTION OF DEVIATIONS

a) **General**

In addition to requirement of this clause, the maximum length of deviation road shall be restricted to 5 kms at any given time unless otherwise instructed. The Contractor shall construct and complete deviations to the satisfaction of the Engineer before commencing any permanent work on the existing road.

Also during these works the Contractor is supposed to provide a detour of adequate pipe culverts for pedestrian and traffic crossing where there is bridge works.

b) **Geometry**

The carriageway width of the deviations shall not be less than 6m wide and suitable for 2-way lorry traffic unless otherwise specified.

c) **Construction**

Unless otherwise instructed gravel wearing course for the deviation shall be 150 mm compacted thicknesses complying with section 10 of the Standard Specification. The Contractor shall allow in his rate for removal of any unsuitable material before placing of gravel wearing course, as this will not be paid for separately.

In addition to provision of this clause, Contractor is required to sprinkle water at least 4 times a day in regular interval to minimise the effects of dust. Latest sprinkling time shall be one hour before the sunset.

906 Passage of Traffic through the Works

The Contractor shall arrange for passage of traffic through the works during construction whenever it is not practicable to make deviations. The cost of doing so shall be deemed to have been included elsewhere in his rates and no separate payment shall be made for this. To this end, the Contractor shall be deemed to have inspected the site for himself and noted any locations where this may apply.

Any damage caused by passing traffic through the works shall be made good at the Contractor's own cost.

907 Signs, Barriers and Lights

Contractor shall provide signs, barriers and lights as shown in the drawing in Book of Drawings at the locations where the traffic is being carried off the existing road to the deviation and back again to existing road. The Contractor shall provide ramps and carry out any other measures as instructed by the Engineer to safely carry traffic from the road to deviation.

Contrary to what has been specified in this clause the road signs provided shall be fully reflectorised and in conformity with clause 9.1 of the "Manual for Traffic Signs in Kenya Part II".

909 Assistance to Public

In addition to provision of clause 909, Contractor shall maintain close liaison with the relevant authorities to clear any broken down or accident vehicles from the deviations and the main road, in order to maintain smooth and safe flow of the traffic.

912 Measurement and Payment

(a) Passage of traffic through the works

Payment shall be made on Lump Sum basis.

(b) Construct Deviation

(i) Road Deviation

The Contractor shall be paid only 50% of the rate for this when he completes deviation road to the satisfaction of the Engineer. The balance shall be paid in equal monthly instalments over the contract period, as he satisfactorily maintains the deviation (as per clause 904 and 905 above) when it is in operation.

(ii) Deviation using Pipe Culverts

The Contractor shall be paid only 50% of the rate for this when he completes deviation to the satisfaction of the Engineer. The balance shall be paid in equal monthly instalments over the contract period, as he satisfactorily maintains the deviation when it is in operation. The Contractor shall be paid full amount when the bridge under construction will be in use.

(c) Assistance to Public

The Contractor will be deemed to have included cost of this item in other items and no separate payment shall be made.

SECTION 10 – MATERIAL REQUIREMENTS FOR GRAVEL WEARING COURSE

In addition to the requirements of the Standard Specifications, the material for gravel wearing course shall be subject to prior approval of the Engineer and shall meet the following requirements.

Grading

Grading of compacted gravel layer shall be within the following grading envelope:-

Sieve Size (mm)	**% By Weight Passing**
37.5	-
28	100
20	95-100
14	80-100
10	65-100
5	45-85
2	30-68
1	25-56
0.425	18-44
0.0075	12-32

Plasticity and bearing strength

1. Plasticity Modulus
   Minimum 200, maximum 1200

2. Plasticity Index

Minimum 10, maximum 3

3. Bearing strength
   CBR at 95% MDD (Modified AASHTO) and 4 days soak: minimum 20

Measurement and payment

Unit: m^3 of gravel wearing course placed and compacted.

The volume of gravel wearing course shall be calculated as the product of the sectional area of the compacted gravel wearing course multiplied by the length of road gravelled as instructed.

The rate of gravel wearing course shall include for the cost of acquisition and provision of land for borrow pits, excavation and winning of gravel material, haulage, spreading, watering and compaction (including mixing and compaction with any existing or in-situ gravel material) as directed.

SECTION 11 – SHOULDERS TO PAVEMENT

1101 GENERAL

The shoulders shall be constructed to a width of .5m, or as directed by the Engineer.

1102 MATERIAL FOR CONSTRUCTION OF SHOULDERS

The shoulders shall be constructed as directed by the Engineer, in accordance with sections 1105, 12, 13 and 14 of the Standard Specification. The material for shoulders shall be the same as that of sub-base and base layers in the carriageway.

1105 SURFACE TREATMENT OF SHOULDERS

The shoulders shall consist of double surface dressing with 14/20mm and 6/10mm nominal sized precoated chippings on the first and second seal respectively.

SECTION 12 – NATURAL MATERIAL SUBBASE AND BASE

1209 MEASUREMENT AND PAYMENT

Notwithstanding any indications to the contrary in the Standard Specification, the Contractor will be responsible for provision and costs involved in proving and Land acquisition of suitable material sites for provision of Subbase and Base material. The rates for natural material for subbase and Base shall be paid in accordance with method A of the Standard Specification. Furthermore, no separate payment shall be made for acquisition of material site, excavation or the transport haulage of natural subbase and Base material as they shall be deemed to have been included in the Contractor's rates for providing and laying.

SECTION 14 - CEMENT TREATED SUBBASE AND BASE MATERIALS

1401 MATERIAL REQUIREMENTS

b) Cement

In variation to this clause, cement for improvement shall comply with KS 1275: 2001. It shall be CEM I 42.5N or equivalent, as instructed by the Engineer.

1405 TREATED MATERIALS

The procedure of mixing the stabiliser, processing, compaction, curing and protection shall comply with section 14 of the Standard Specification.

1409 PROTECTION AND CURING

Curing of treated material shall be by method (i) or method (iii).

SECTION 15 - BITUMINOUS SURFACE TREATMENTS & SURFACE DRESSING

PART B - PRIME COAT AND TACK COAT

1502B MATERIALS FOR PRIME COAT AND TACK COAT

For prime coat, the binder shall be a medium-curing cut-back MC 30 unless otherwise directed by the Engineer.

The rate of spray of bituminous prime coat refers to the gross volume of the cut-back bitumen, that is the volume of the bitumen plus dilutant.

PART C - SURFACE DRESSING

1502C MATERIALS FOR SURFACE DRESSING

The contractor shall take full responsibility for the design and construction of all surface dressings. They shall however, be constructed using the materials specified below. The proposed designs and constructions procedures shall be presented to the Engineer for approval prior to the commencement of any surface dressing work on any section of the road.

a) Binder

The bituminous binder shall be medium curing cut back MC 3000

b) Chippings

Chippings shall be of Class 3 material and shall comply in all respects with clause 1502C of the Standard Specification. The Contractor's attention is drawn to the requirements of Clause 1501C of the Standard Specification with regard to cleanliness and the dust content of chippings for surface dressing. Should it prove necessary in the Engineer' opinion to wash chippings, no extra payment will be made to the Contractor for this operation.

1505C PRECOATED CHIPPINGS

14/20mm chippings and 6/10 mm chippings used for first and second seal respectively shall be pre-coated. The binder used for pre-coating shall be A3 bitumen emulsion. Pre-coating shall be carried out in a mechanical mixer of suitable size. The emulsion shall be poured into the mixer and an equal quantity of water added. They shall be mixed together and then the chippings added. As soon as the chippings have become uniformly wetted, hydrated building lime shall be scattered over the surface and the chippings mixed again. When this has been evenly distributed the mix shall be dropped from the mixer. To provide 1000 Kg of pre-coated 6/10 chippings, the amount of ingredients to be used (as percentages of dry weight of aggregate) shall be approximately as follows: -1.0% bitumen emulsion, 1.0% of water and 0.25% of hydrated building lime.

If the resulting chippings, with the above quantities, are tacky and agglomerate or are not adequately covered, then the Engineer may instruct the quantity of emulsion and water to be varied. Prior to laying pre-coated chippings the Contractor shall prepare trial mixes of bitumen and chippings in the presence

of the Engineer. After completion of the trials the Engineer shall agree with the Contractor on the mix to be used. The Contractor shall maintain this mix, unless otherwise instructed. If there is a change in the source or character of the chippings, new trials shall be carried out and new mix proportions agreed.

1511C PAYMENT

a) Item: Seal Coat
Unit: l (litre) of Medium cut bitumen used for each seal coat.

b) Tack Coat
Tack coat shall be measured by the litre of diluted emulsion.

Item: Pre-coated Chippings
Unit: m^3 of each nominal size for each class.

Pre-coated chippings shall be measured by the cubic metre of each nominal size for each class calculated as the product of the area in square metres instructed to be covered and the reciprocal of the instructed rate of application in square metres/cubic metre or the actual rate of application in square metres/ cubic metre whichever gives the lower volume.

The rate for pre-coated chippings shall include the cost of providing, hauling, pre-coating, spreading and rolling the chippings at any application rate, all haulage as necessary and complying with Parts A and C of section 15 of this Specification.

Chippings stockpiled for future maintenance

Chippings stockpiled for future maintenance chippings stockpiled for future maintenance shall be measured in accordance with section 15c (b) of the specification except that free haul shall be measured in accordance with section 15c (b) of the specification.

1512 CHIPPINGS STOCKPILE

The Contractor may be required by the Engineer to stockpile chippings for future maintenance works. These chippings will meet all the relevant requirements of the Standard and Special Specifications. The stockpiles will be in a site to be determined by the Engineer.

SECTION 17 – CONCRETE WORKS

1703 (B) REINFORCING BARS OF BRIDGES

i. Description

This work shall consist of furnishing, fixing and placing in the concrete of the deck slab, pier heads, pier stems, pier bases and beams reinforcing bars of the quality, type and size in accordance with these specifications and in conformity with the requirements shown on the drawings.

ii. Material

Reinforcing bars shall be deformed and shall meet the requirements of BS 4461, unless otherwise called for in the drawings or approved by the Engineer.

No reinforcing bar shall be delivered without a certificate guaranteeing the yield stress. The reinforcing bar shall be kept off the ground, free from dirt, oil, grease, or avoidable rust and stored within a building or provided with suitable covers. If it is necessary for the Engineer to ascertain the quality of the reinforcing bars, the Contractor shall test the reinforcing bars, at his own expense, by means as directed by the Engineer.

iii. Construction Method

The Engineer shall provide the Contractor with bending schedule showing the location, types, sizes, bending dimensions and cut lengths of the reinforcing bar required to be fixed in the works.

Cutting and Bending:

Only qualified men shall be employed for the cutting and bending, and proper application shall be provided for such work. Bars shall be cut and bent cold to the dimensions indicated and with equipment and methods approved by the Engineer.

Placing:

Reinforcing bars shall be accurately placed in proper position, and so that they be firmly held during placing of concrete. Bars shall be tied at all intersections by by using annealed iron wire 0.9mm or larger diameter, or suitable clips. Distances from the forms shall be maintained correct by means of metal hangers, metal blocks, metal supports or other supports approved by the Engineer.

Reinforcing bars shall be inspected by the Engineer after placing. When a long time has elapsed after placing reinforcing bars, they shall be cleaned and inspected again by the Engineer before placing concrete.

Splicing and joint:

When it is necessary to splice reinforcing bars at points, position and methods of splicing shall be determined based on strength calculations and approved by the Engineer. In lapped splices, the bars shall be lapped by the required length, and wired together at several points by using annealed iron wire larger than 0.9mm.

iv. Measurement and Payment

Bending and installation of reinforcing bar of the bridge deck shall be measured in terms of tons. The length of steel bar of each size will be shown on the drawings and bar bending schedule. In computing the weight to be measured, the theoretical weights of bars of the cross-section shown on the Drawings or authorised shall be used. These weights are given in the following table:

Bar Type and cross-section in millimetres	Weight of bar in kilogram per 12m length of bar
Y10	7.40
Y12	10.66
Y16	18.95
Y20	29.60
Y25	46.30
Y32	75.76

1703 (C) FORMWORK FOR CULVERT WALLS AND SLABS AND BRIDGES

This work shall consist of all temporary moulds for forming the concrete for culvert walls and slabs and bridge works together with all temporary construction required for their support. Unless otherwise directed by the Engineer all formworks shall be removed on completion of the structural elements constructed.

(a) Materials

Forms shall be made of wood or metal and shall conform to the shape, lines and dimensions shown on the Drawings.

All timber shall be free from holes, loose material, knots, cracks, splits and warps or other defects affecting the strength or appearance of the finished structure.

Release Agents – Release agents shall be either neat oils containing a surface activating agent, cream emulsions, or chemical agents to be approved by the Engineer.

(b) Construction Method

(i) Formworks

Formworks shall be designed to carry the maximum loads that may be imposed, and shall be rigidly constructed as to prevent deformation due to load, drying and wetting, vibration and other causes. After forms have been set in correct location, they shall be inspected and approved by the Engineer before the concrete is placed.

If requested, the contractor shall submit to the Engineer working drawings of the forms and also, if requested, calculations to certify the rigidity of the forms.

Unless otherwise described in the Contract, all form joints for exposed surfaces of concrete shall form a regular pattern with horizontal and vertical lines continuous throughout each structure and all construction joints shall coincide with these horizontal and vertical lines. PVC pipes of 100mm diameter for weep holes shall be arranged as shown on the Drawings.

Unless otherwise specified, formwork shall be designed to form chamfers at all external corners whether or not such chamfers are shown on the Drawings to prevent cracks and other damage from arising.

The inside surface of forms shall be cleaned and coated with a releasing agent to prevent adhesion of the concrete. Release agents shall be applied strictly in accordance with the manufacturer's detailed instructions. The release agent shall be applied to the formwork prior to erection. Release agent must not come into contact with reinforcement. Immediately before concrete is placed, the forms shall be thoroughly cleaned and freed from sawdust, shavings, dust, mud or other debris by hosing with water. Temporary openings shall be provided in the forms to drain away the water and rubbish.

(ii) Scaffolding

All scaffolding required to support the forms shall be designed and constructed to provide necessary rigidity to support the loads without appreciable deflection or deformation.

Details, plans and structural and flexural calculations for scaffolding shall be submitted to the Engineer for approval, but shall not relieve the contractor of his responsibility to construct the formwork by use of these plans, for construction of the structures as specified.

(iii) Removal of formwork

The time at which the formwork is truck shall be the Contractor's responsibility and the forms shall not be removed until the concrete strength has reached at least 20N/mm^2.

(c) Measurement and Payment

Payment shall be made according to Section 17 of the Standard Specification for Road and Bridge Construction.

1703 (D) CONCRETE WORKS (CLASS 25/20) FOR CULVERT WALLS AND SLABS AND CLASS (30/20) FOR BRIDGEWORKS

This work shall consist of furnishing, mixing, delivering and placing of the concrete for the construction of box culverts and bridgeworks in accordance with these Specifications and in conformity with the requirements shown on the Drawings.

Concrete class 25/20 shall be used for the substructure while, while concrete class (30/20) shall be used for superstructure of the bridge works.

(a) Concrete Materials

(i) Cement: Cement shall be of Portland type cem 42.5N/mm^2 and shall conform to the requirements of BS 12 or equivalent.

The contractor shall select only one type or brand of cement. Changing of type or brand of cement will not be permitted without a new mix design approved by the Engineer. All cement is subject to the Engineer's approval; however, approval of cement by the Engineer shall not relieve the Contractor of the responsibility to furnish concrete of the specified compressive strength.

Conveyance of cement by jute bags shall not be permitted. Storage in the Contractor's silo or store house shall not exceed more than two (2) months requirements and age of cement after manufacture at mill shall not exceed more than four (4) months. The contractor shall submit to the Engineer for his approval the results of quality certificate testing carried out by the manufacturer.

Whenever it is found out that cement has been stored too long, moist, or caked, the cement shall be rejected and removed from the project.

(b) Aggregates

Fine and coarse aggregates must be clean, hard, strong and durable, and free from absorbed chemicals, clay coating, or materials in amounts that could affect hydration, bonding, strength and durability of concrete.

Grading of aggregates shall conform to the following requirements:

(i) Grading of fine Aggregates

Sieve Size	Percentage by Weight Passing
10 mm	100
5 mm	89 – 100
2.5 mm	60 – 100
1.2 mm	30 – 100
0.6 mm	15 – 54
0.3 mm	5 – 40
0.15 mm	0 - 15

(ii) Grading of Coarse Aggregates

Size of Coarse Aggregate	Amounts finer than each standard sieve percentage by weight							
	40	30	25	20	15	10	5	2.5
	100	-	-	90 – 100	-	30 – 69	0 – 10	-

Other requirements for aggregates are as follows:

(iii) Fine Aggregates

Fitness Modulus:	AASHTO M-6 2.3 – 3.1
Sodium Sulphate Soundness:	AASHTO T104 Max. 10% loss
Content of Friable Particles:	AASHTO 112: Max. 1% by weight
Sand Equivalent:	AASHTO T176: Min. 75

(iv) Coarse Aggregate

Abrasion:	AASHTO T96: Max. 40% loss
Soft Fragment and shale:	AASHTO M80: Max. 5% by weight
Thin and elongated Pieces:	AASHTO M80: Max. 15%

(v) Water

All sources of water to be used in concrete production shall be approved by the Engineer. Water shall be free from injurious quantities of oil, alkali, vegetable matter and salts as determined by the Engineer.

(vi) Admixture

Only admixtures, which have been tested and approved in the site laboratory through trial mixing for design proportions shall be used.

Before selection of admixture, the Contractor shall submit to the Engineer the specific information or guarantees prepared by the admixture manufacturer.
The contractor shall not exclude the admixture from concrete proportions.

Concrete class 25/20 and concrete class 30/20

Concrete class 25/20 shall be used for box culvert walls and slabs and concrete class 30/20 shall be used for bridge works.

The requirements of concrete class 25/20 and concrete class 30/20 are provided as follows unless otherwise specified by the Engineer who will designate any alteration.

Design compressive strength (28 days: 25N/mm^2
Maximum Nominal size coarse aggregates: 20mm
Maximum water/cement ratio of 45% with slump of 50mm

Concrete class 30/20 shall be used for bridgeworks.
Design compressive strength (28 days: 30N/mm^2
Maximum Nominal size coarse aggregates: 20mm
Maximum water/cement ratio of 45% with slump of 50mm

(c) Proportioning Concrete

The Contractor shall consult with the Engineer as to mix proportions at least thirty (30) days prior to beginning the concrete work. The actual mix proportions of cement, aggregates, water and admixture shall be determined by the Contractor under supervision of the Engineer in the site laboratory.

The Contractor shall prepare the design mix proportions which have target strength based on the formula: target strength = 1.64xstandard deviation.
A standard deviation of 5 shall be used unless directed otherwise by the engineer.
No class of concrete shall be prepared or placed until its deign-mix proportions have been approved by the Engineer.

(d) Concrete Work

(i) Batching

Batching shall be done by weight with accuracy of:

Cement:	½ percent
Aggregate	½ percent
Water Admixture:	1 percent

Equipment shall be capable of measuring quantities within these tolerances for the smallest batch

regularly used, as well as for larger batches.

The accuracy of batching equipment shall be checked every month in the presence of the Engineer and adjusted when necessary. The cost of such checking shall be borne by the contractor.

(ii). Mixing and delivery

Slump of mixed concrete shall be checked and approved at an accuracy of +25mm against designated slump in these specifications.

(iii) Concrete in hot weather

No concrete shall be placed when the ambient air temperature is expected to exceed thirty three degrees Celsius ($33^{o}c$) during placement operations).

(iv). Concreting at night

No concrete shall be mixed, placed or finished when natural light is insufficient, unless an adequate approved artificial lighting system is operated; such night work shall be subject to approval by the Engineer

(v) Placing

In preparation of the placing of concrete, the interior space of forms shall be cleaned and approved by the Engineer prior to placing concrete. All temporary members except tie bars to support forms shall be removed entirely from the forms and not buried in the concrete. The use of open and vertical chute shall not be permitted unless otherwise directed by the engineer.

The Contractor shall provide a sufficient number of vibrators to properly compact each batch immediately after it is placed in the forms.

(e) Measurement and Payment

Measurements for the Concrete of class 30/20 for bridge works shall be made in cubic metres for the structure actually constructed, measured from the dimensions shown on the Drawings or instructed by the Engineer.

Payment for class 25/20 concrete for culvert walls and slabs and class 30/20 for bridgeworks shall be the full compensation for furnishing all materials of the concrete mixing, delivering, placing and curing the concrete, equipment and tools, labour and other incidentals necessary for the completion of the work in accordance with the Drawings and these Specifications and as directed by the Engineer.

1704 DESIGN OF CONCRETE MIXES

Add a new Sub Clause 1704(f) as follows: -

f) Levelling concrete (class 15/20) for bottom slab inclusive of cost of form works

This work shall consist of placing and levelling lean concrete class 15/20 over a prepared bed of stone boulders in the foundation for bottom slab and wing walls in accordance with these specifications and with conformity with the lines, grades, thickness and typical cross-sections shown on the drawings unless otherwise directed by the Engineer.

(a) **Materials for Levelling Concrete**

Requirement for the concrete class 15/20 is specified as follows: -
Design compressive strength (28) days : $15N/mm^2$

Maximum size of coarse aggregate : 20mm
Maximum cement content : 300 kg/m^3.

Maximum water/cement ratio : 0.5
Maximum slump : 80 mm

(b) **Construction Method**

The bed of stone boulders upon which the levelling concrete will be placed shall be smooth, compacted and true to the grades and cross-section and shall be set to the required lines and grades.

1732: PRECAST CONCRETE

1732 (a) Scope of work

The works shall consist of supply of all materials i.e. cement, fine aggregates, coarse aggregates, water, admixtures and any other material component necessary for the production of the precast beams, placing, compacting ,curing, lifting and installation of the precast beams into position.

1732 (b) Storage and handling

The precast units shall be transported, handled and stored in such a manner that will prevent damage to the precast units. Precast units that will be damaged due to poor handling shall be replaced or repaired to the engineer's satisfaction.

1732 (c) Fabrication

The design dimensions shall be verified with those at the field before commencement of fabrication. Any discrepancies in dimensions must be brought to the engineer's attention for directions.
Formwork shall be accurately constructed to produce the precast units to dimension, shape configuration and profile indicated in the drawing or as shall be directed by the engineer.

Anchors, lift devices and accessories: provide concrete inserts, anchors, brackets and fasteners as indicated or as required for fabrication and installation. The contractor shall select the lift devices and shall be responsible for their performance and for any damage resulting from their use. Lift devices shall not be visible on exposed faces of precast members. Provide a minimum of four for each unit.

Concrete reinforcement, lifting reinforcement, and concrete inserts and anchorage devices shall be placed and secured against movement.

The precast units shall be labeled in such a manner that will allow identification of their final location.

1732(d) Measurement and payment

The payment for the precast beams shall be made by the volume of compacted concrete in the beams, weight of steel fixed in the beams and surface area of the form work.

The payment rate for lifting and installation shall be paid as a separate item. The unit rate for the lifting and installation shall include transport, lifting and installation equipments including any radio communications, operators, skilled and unskilled labour, fuel, maintenance, mobilization and demobilization and any other item incidental to the process of installation. The unit rate shall be per precast beam fixed into position.

SECTION 20 - ROAD FURNITURE

2001 ROAD RESERVE BOUNDARY POSTS

Road reserve boundary posts shall be provided as directed by the Engineer and in compliance with Standard Specification clause 2001. They shall be placed at 50m intervals along the boundary of the road reserve.

2003 EDGE MARKER POSTS

Edge marker posts shall be provided as directed by the Engineer and in compliance with the requirements of Standard Specification clause 2003

2004 PERMANENT ROAD SIGNS

Permanent Road Signs shall be provided as directed by the Engineer and in compliance with the requirements of the "Manual for Traffic Signs in Kenya" Part II and standard Specification clause 2004.

2004B EXISTING ROAD SIGNS

Where directed by the Engineer, the Contractor shall take down road signs including all posts, nuts, bolts and fittings, and remove and dispose of the concrete foundation and backfill the post holes. The signs shall be stored as directed by the Engineer.

Measurement and payment for taking down road signs shall be made by the number of signs of any type and size taken down, cleaned and stored as directed.

2005 ROAD MARKING

Paint for road marking shall be internally reflectorised hot applied thermoplastic material in accordance with Clause 219 of the Standard Specification.

The rates inserted in the Bills of Quantities for road marking shall include for prior application of approved tack coat.

2006 GUARDRAILS

Contrary to the Standard Specification, guardrail posts shall be concrete 200 mm diameter set vertically at least 1.2m into the shoulder as directed by the Engineer. Spacer blocks shall also be made of concrete.

Beams for guardrails shall be "Armco Flexbeam" or similar obtained from a manufacturer approved by the Engineer.

2007 KERBS

(a) <u>Vertical Joints</u>

Vertical joints between adjacent kerbs shall not be greater than 5 mm in width and shall mortar consisting of 1:3 cement: sand by volume.

b) <u>Transition between flush and raised kerbs</u>

The transition between flush and raised kerbs (e.g. at bus bays) shall be termed as ramped kerbs and shall occur within a length of 2.0m.

2008 KILOMETRE MARKER POSTS

Kilometre marker posts shall be provided as directed by the Engineer and in compliance with Standard Specification Clause 2008.

2009 RUMBLE STRIPS

Where directed by the Engineer, the Contractor shall provide, place, trim, shape and compact to line and level rumble strips on the finished shoulders. This shall be done to the satisfaction of the Engineer.

2010 BOLLARDS

Where directed by the Engineer, the Contractor shall provide and install class 20/20 200mm diameter reinforced concrete bollards concreted 300mm into the ground.

SECTION 21 – MISCELLANEOUS BRIDGE WORKS

2102 TESTING OF BRIDGE BEARINGS

The testing of bearings if instructed by the Engineer shall be carried out as specified in BS 5400 part 9 Section 9.2: 1983 clause 7.2 'Testing of complete bearings.

The Contractor shall supply to the Engineer, the results of Prototype tests, Production tests and Acceptance tests carried out for the specified bearings together with a sample of the bearings for approval prior to purchase and supplying of the bearings to site.

The bearings to have a minimum vertical load capacity of 3000kN.

2104 STEEL PARAPETS ON BRIDGE DECKS

Steel parapets on bridge decks shall be as specified on the drawings. The steel parapets complete with base plates to posts shall be hot deep galvanized to Bs 639 in work shop subassemblies designed and sized in total length for ease of hoisting and erection in top assembly on site by bolting and erection in top assembly on site by bolting to Engineers approval. Fixing nuts and bolts shall be sheradized.

The fixing nuts on bolts at site joints in top assembly shall be spot welded to the bolt shafts to minimise disassembling of the parapets through vandalism on completion and hand over of the bridges. Site spot welded nuts shall be cleaned of any slug and receive one priming coat, one undercoat and one finishing coat of approved paint.

The contractor shall prepare and submit shop drawings of the parapets workshop subassemblies plus drawings of the parapets in top assembly for Engineers approval prior to fabrication of the parapet subassemblies.
Measurement of the completed parapet in top assembly for payment shall be per linear metre of parapet.

2106 SURFACING TO BRIDGES

The surface finish of bridge decks on which surfacing shall be laid shall be floated class UF1 ridged finish formed using a stiff wire brush laterally across the carriageway.

The surface dressing to bridge deck shall be concrete applied with concrete hardener to the approval of the engineer.

2105 EXPANSION JOINTS

2105.1 Description

This work shall consist of fabrication and placing of expansion joints as indicated on the drawing and conforming to these specifications or as directed by the Engineer.

2105.2 General

The expansion joints shall be designed and duly approved by the Engineer. They shall cater for the expected movement and rotation of the structure at the joints and provide smooth riding surface. They shall also be easy for inspection, maintenance and replacement.

Expansion joints shall be robust, durable, watertight and replaceable. Site fabricated expansion joints shall be prohibited. Expansion joints shall be obtained by the Engineer either directly or through the Contractor from approved manufacturers and be of proven type.

Vehicular traffic shall not be allowed over expansion joints after its construction for such period as may be determined by the Engineer.

Proprietary type deck joints offered by the Contractor in lieu of the type specified shall comply in all respects with the manufacturer's specifications and meet the required range of movements and rotations and be fit for the purpose of ensuring satisfactory long term performance in the bridge.

Where alternative type proprietary deck joints are proposed by the Contractor, the following information shall be provided:

- Name and location of the proposed manufacturer
- Dimensions and general details of the joint including material specifications, holding down bolt or anchorage details and installation procedures
- Evidence of satisfactory performance under similar environmental conditions of similar joints being produced by the manufacturer.

Any acceptance of alternative types will be at the sole discretion of the Engineer.

Such deck joints shall be installed in accordance with the manufacturer's recommendations and to the general requirements of this Specification.

No expansion joint shall be provided only for the width of the carriageway.
It shall follow the profile including the kerb and the footway and facia, if provided. The type of expansion joint for the latter may be made different from that used for the carriageway expansion joint.

2105.3 Requirements

(a) Criterion

The requirement criterion will be separately applicable for the expansion joint proper and the transition zone of attachment to the deck.

(b) Types of Performance

There are two types of performance requirements for the expansion joint proper namely from the necessity of the bridge and from the road users such as man, animal and vehicle.

(c) Performance Requirement with Respect to Bridges

The expansion joint shall:

- Withstand the imposed load including the impact load from live load and other sources
- Allow expansion and contraction movement due to temperature, creep, shrinkage, pre-stressing and structural deformations
- Permit relative rotation in elevation and plan due to the causes as noted above,
- Be waterproof

Bridge deck expansion joint seals play a critical role in preventing the degradation of the structural components of the bridge system. Without effective joint seals, water passes through the bridge deck and works harmfully to corrode steel components and cause deterioration of the concrete. Rainwater gathers various corroding additives from the atmosphere and also from the carriageway.

- Ensure sealing

  In case bridge deck joints are not sealed, apart from loss of waterproofing, grit and other forms of road debris may enter the joint. Debris, when impacted with the joint can seriously restrict the movement instead of facilitating the same. In the case of proprietary joints being accepted for adoption, the sealing shall be as directed by the Engineer.

- Ensure long life by being resistant to corrosion
- Be easy to install
- Be easy to maintain and replace
- Be resistant to the materials likely to collect/spill over the deck in its normal service.

(d) Performance Requirement with Respect to User

The expansion joint shall:

- Provide smooth continuity at the top of the deck for riding comfort
- Be of skid resistant surface
- Re- non-damaging to the rubber tyre
- Make minimum noise during vehicular crossing
- Ensure that animal paws and hooves should not get entangled where bridges are used by animal drawn traffic
- Permit passing of bullock cart steel tyre for bridges where bullock carts ply, and
- Look good aesthetically.

(e) Performance Requirement for Transition Zone

This is the zone of connection of joint assembly and the adjoining deck.

The expansion joint shall:

- Permit transfer of generated forces without distress without getting uprooted. The purpose will not be served if the bonding is with the wearing coat only. Anchorage must be provided with the deck structural element.

- Ensure that surface in the transition zone stays undisturbed during long term service.

2105.5 Filler Joints

The components of this type of joint shall be at least 2 mm thick corrugated late placed slightly below die wearing coat, 2D mm thick compressible board, to protect the edges. Twenty (20) mm thick pre-moulded joint filler shall fill the gap upto die top level of the wearing coat sealed with a joint scaling compound.

The material used for filling expansion joint shall be bitumen impregnated felt, elastomer or any other suitable material, as specified on the drawings. Impregnated felt shall conform to the requirements of

IS: 1838, and shall be approved by the Engineer. The joint filler shall consist of large pieces and assembly of small pieces to nuke up the required size shall be avoided.

Expansion joint materials shall be handled with care and stored under cover by the Contractor to prevent damage. Any damage occurring after delivery shall be made good to the satisfaction of the Engineer and at the expense of the Contractor.

Joint gaps shall be constructed as shown on the drawings. Surfaces of joint grooves shall be thoroughly cleaned with a wire brush to remove all loose materials, din and debris, then washed or jetted out.

Pre-moulded expansion joint filler shall not be placed in position until immediately prior to the placing of the abutting material. If the two adjacent surfaces of the joint can to be placed at different times, this type of joint filler shall not be placed until the second face is about to be placed.

Sealants shall be installed in accordance with the manufacturer's recommendations and all appropriate requirements for joint face priming.

Sealants shall be finished approximately 3 mm below the upper surfaces of the joint

Joint materials spilt or splashed onto finished surfaces of the bridge during filling operations shall be removed and the surfaces made good to the Engineer's approval.

No joint shall be sealed until inspected by the Engineer and approval is given to proceed with the work.

SECTION 22-DAYWORKS

2202 MEASUREMENTS AND PAYMENT

(a) Plant

Where items of major plant listed in the schedule of day works are specified by type (e.g. Concrete mixer etc.) the power rating of such items of plant provided by the Contractor shall not be lower than the power ratings of such plant manufactured within the last two years prior to the date of BID. Any item of major plant employed upon day works that has a power rating lower than specified above shall be paid for at rates lower than those in the schedule of Day works. The reduction in the rate payable shall be in proportion to the reduction in power rating below that specified above.

SECTION 25 – HIV/ AIDS, GENDER ISSUES, SOCIAL ISSUES AND LOCAL PARTICIPATION

2501 SCOPE

This specification sets out the Contractor's obligations with regard to on-site HIV/ AIDS awareness campaign and preventive measures which are to be instituted.

2502 INTERPRETATION AND DOCUMENTATION

The following documents shall inter-alia be read in conjunction with this specification:

- The Instruction to Bidders;
- The Conditions of Contract;
- The drawings;

2503 GENERAL REQUIREMENTS

(a) HIV/ AIDS Awareness Campaign

The Contractor shall institute an HIV/ AIDS awareness campaign amongst his workers for the duration of the Contract. As part of the campaign the Contractor will be required to display AIDS awareness posters in all buildings frequented by workers employed on the contract, where such buildings fall under the control of the Contractor. In addition, at least ten (10) of the Contractor's vehicles, regularly used on site shall display HIV/ AIDS awareness posters. The posters shall be printed on gloss paper and shall be at least A1 size on buildings and A3 size, or other approved size on vehicles. The message on the posters shall be supplied by the Employer through the Engineer before the posters are printed.

Aids awareness shall also be included in the orientation process of all workers employed on the contract.

(b) AIDS Preventation Campaign

The Contractor shall institute an HIV/ AIDS prevention campaign amongst his workers for the duration of the contract. As part of the campaign the Contractor will be required to make condoms available to workers. The condoms shall be from an approved manufacturer and comply with the current ISO Standards or WHO/UNAIDS Specifications and Guidelines for Condoms, 1998, or any more recent publication. The Contractor shall make available at least 4,000 condoms every month, through dispensing machines or other approved method of distribution. The Contractor shall at all times keep the site adequately supplied with condoms.

(c) HIV/ AIDS Training

Introduction

HIV/ AIDS is having a significant and increasing impact in Kenya. Interventions that stimulate the movement of people increase both the exposure to the HIV virus and the spread of the virus. Road construction has been identified as one such intervention.

The Government's policy is to integrate HIV/ AIDS awareness and prevention into all road construction and rehabilitation programmes. This is in accordance with the Third National Strategic Plan (2000-5) for HIV/ AIDS prevention and control as approved by the Government of Kenya, International Bank for Reconstruction and Development (IBRD) and other organizations.

The project will involve both local labour and other contractor's labour. It is a contractual requirement for the Contractor to carry out HIV/ AIDS awareness and prevention activities during the construction period as stipulated in this specification.

Objective

The objective of the HIV/ AIDS training programme is to reduce the risk of exposure to and spread of the HIV virus in the area influenced by the construction. The target group will be local labourers and their supervisors employed by the works contractors. The wider community will benefit indirectly through their normal day-to-day interaction with the target group.

Scope of activities

Activities for HIV/ AIDS awareness and prevention will be broad-based, targeting both individuals and groups. They may consist of:

(i) Information posters in public places, both on and offsite (eating houses, bars, guest houses etc.) and on contractor's vehicles.

(ii) Availability of socially marketed condoms.

(iii) Peer educators (reference people) drawn from the local labour and educated in HIV/ AIDS issues for discussions with colleagues (estimate 1 per 50 employees).

(iv) Small focus group discussions to disseminate information covering key issues.

(v) Theatre groups and video presentations.

(vi) Promotional events (such as football matches) to encourage openness and discussion of HIV/ AIDS issues.

(vii) Promotional bill boards to raise awareness of the integration of construction and HIV/ AIDS activities.

(viii) Inclusion of HIV/ AIDS activities at site meetings with the District Aids Committee and other approved representatives.

(ix) Availability of promotional materials such as T-shirts, caps, bumper stickers, key rings, etc.

The scope of activities may be tailored as required to meet the perceived needs and priorities of the labourers, and should involve participatory approaches to ensure that they are appropriate and have a public health impact. The scale and frequency of activities may also be adjusted to suit requirements of the target group. Education will cover:

(a) Preventive behaviours including partner reduction, condom use, awareness and appreciation of the importance of treatment of sexually transmitted infections (STIs)

(b) Skills including negotiating safer sex, correct condom use, purchase of condoms without embarrassment; and

(c) Referral to local health centres and available services.

Tasks to be undertaken to support the above activities include:

(a) Establishing the status and focus of all current and planned HIV/ AIDS activities in the area to ensure complementary and determining potential involvement in project activities.

(b) Carrying out a brief review of regional activities combining road construction with HIV/ AIDS campaigns to determine options, best practice key issues, constraints, etc.
(c) Reviewing of Information, Education and Communication (IEC) materials available and their relevance to road construction, making recommendations for future development of IEC materials.
(d) Providing supervision for peer educators to ensure sustained quality of education. Incentives for their continual work may be small promotional items such as T-shirts, caps etc.
(e) Providing mechanisms for the social marketing of condoms and distribution of materials.
(f) Monitoring activities regularly to assess effectiveness and impact. This should include an initial, interim and final assessment of basic knowledge, attitude and practices (KAP) taking account of existing data sources and recognizing the limitations due to the supported by qualitative information from focus group discussions.

Collaboration

HIV/ AIDS activities are co-ordinated nationally by the National Aids Control Council (NACC). KeRRA, in consultation with NACC and the Ministry of Health (MOH), will co-ordinate with the provincial, district and local representatives. Representatives of local health authorities will be invited to attend training and communication activities.

Activities on the construction site will be linked as far as possible with ongoing HIV/ AIDS awareness and prevention in the area. This will ensure complementary of approaches, reinforcing education and minimizing duplication. In additional, these links will ensure that the target group will have access to continued information after the end of the construction period.

Contractor Responsibilities

The Contractor will employ and designate a qualifies HIV/ AIDS expert fulltime, to be approved by the Engineer, who will work closely with the Client, MOH and other implementing agencies to support the HIV/ AIDS awareness and prevention activities. This will ensure maximum effectiveness and integration with construction activities. Specific, but not exclusive, issues to be addressed by the Contractor are:

(i) Scheduling appropriate timing and durations of the implementation of HIV/ AIDS activities as part of work plan for labourers and supervisors. Designated rest times such as lunch breaks and pay days should be excluded.
(ii) Identification of suitable individuals from recruitment records for education with the implementing organization.
(iii) Provision of suitable sites for communication activities and for condom distribution.
(iv) Monitoring of the implementation of peer educator activities
(v) Provision of support as necessary to the implementing organization.

Inputs

An organization experienced in the provision of HIV/ AIDS awareness and prevention activities will be selected as a subcontractor to provide the above scope of activities on behalf of the main Contractor.

Reporting

The implementing organization will produce the following reports to be submitted to the Contractor, the Engineer, KeRRA and EACC:

- Monthly progress briefs for inclusion in site meetings.
- Quarterly reports detailing activities carried out, issues, follow up, etc.
- A review report of activities in the road construction sector,
- A review report of existing IEC materials with recommendations for development of materials specifically for the road sector.
- A final report detailing the methodology and activities carried out under this project including lessons learnt, impact, liaison with the Contractor and other parties, etc.

In addition, a report with the recommended approach for integration of HIV/AIDS awareness and prevention activities in the road construction sector will be produced. This will be a synthesis of project activities including contractual approaches, communication activities, availability of materials, liaison with existing organizations, etc. it will be developed with all parts involved in the construction activities to ensure the wide range of views and experiences is gained.

The final report and recommended approach will be presented to KeRRA, NACC and other interested organizations including private sector, funding agencies and NGO's/

Timing

Activities shall commence at the start of the construction period and continue through-out the 24 months to ensure a sustained impact. Reporting and dissemination activities shall continue for three months after the project is completed to ensure integration into current practice.

2504 MEASUREMENT AND PAYMENT

The payment items in this clause shall include full compensation for all work associated with the provision of HIV/ AIDS related services as specified.

Item: Instituting an HIV/AIDS awareness and prevention campaign

Unit: Months

The unit of measurement shall be the calendar month or part thereof, measured over the duration of the campaign. The tendered rate shall include full compensation for equipment, labour, materials including the procurement and distribution of condoms and full compensation for transport, meals, accommodation and any other reasonable allowances for the participation of local health authorities, provincial director of health and NACC and other resources required for the provision of the service in compliance with clause 2503 (a) and (b) above.

Item: Instituting an HIV/AIDS Training – Engagement of specialist HIV/ AIDS sub contractor

Unit: Provision Sum

Compensation for HIV/AIDS Specialists and resources for the implementation of Clause 2503 (c). any amount required under this item will be paid as per the programme approved by the engineer and the Client prior to expenditure

SECTION VII - DRAWINGS

Note: A list of drawings should be inserted here. The actual drawings including Site plans should be annexed in a separate booklet.

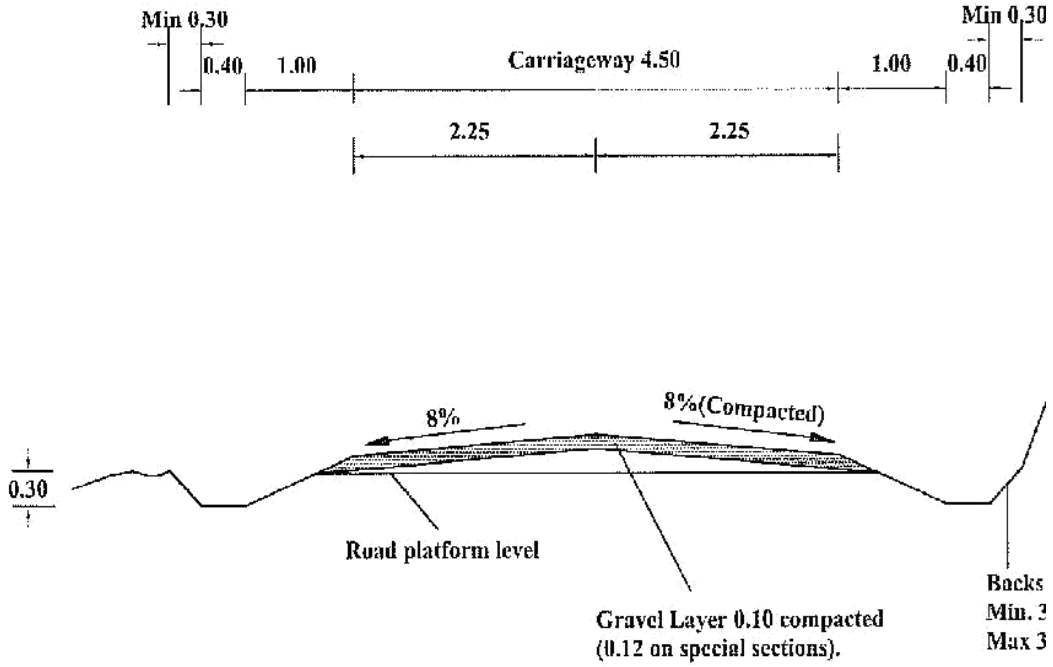

Notes:
1.All dimensions in metres
2.Gravel thickness may be increased as directed by the Engineer

C-2

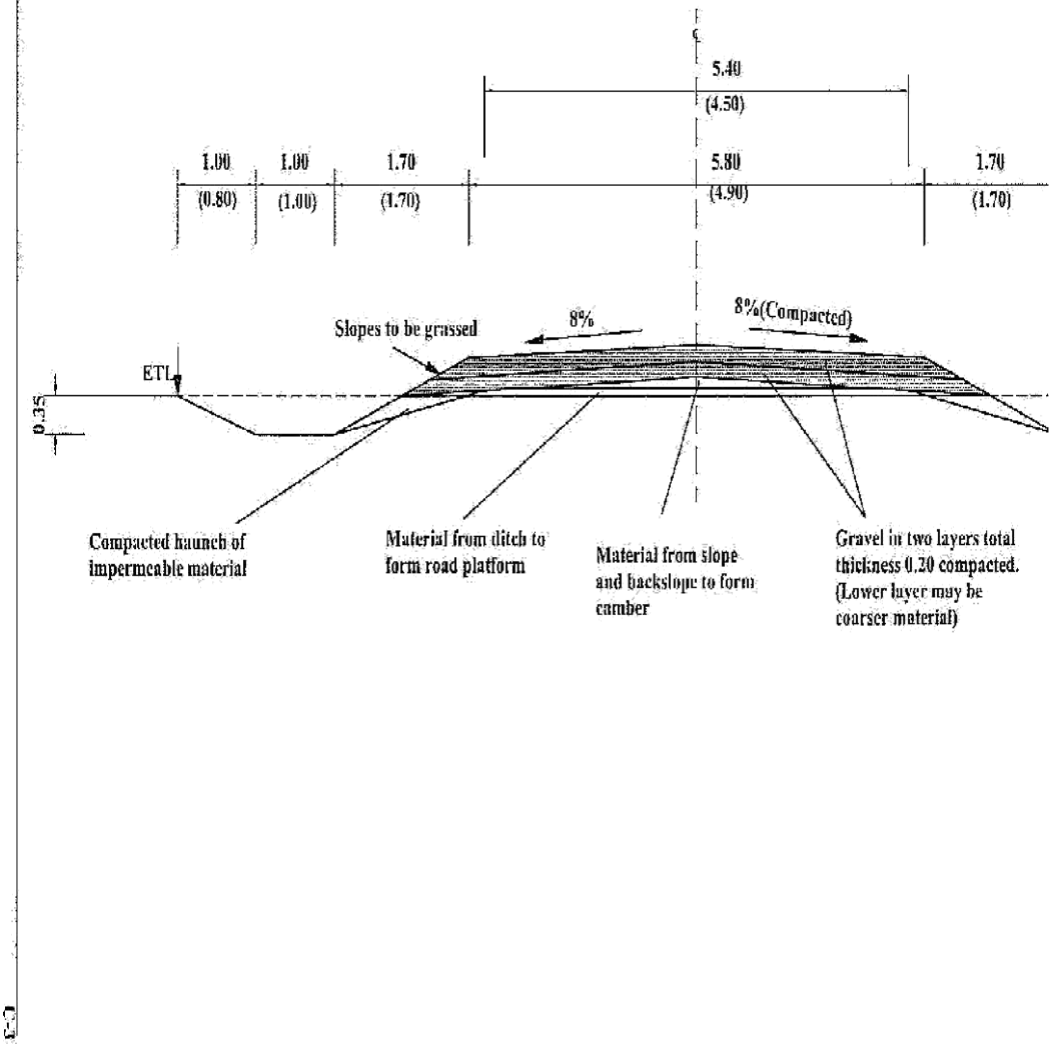
5.40
(4.50)
1.00
(0.80)
1.00
(1.00)
1.70
(1.70)
5.80
(4.90)
1.70
(1.70)
Slopes to be grassed
8%
8%(Compacted)
ETL
0.35
Compacted haunch of impermeable material
Material from ditch to form road platform
Material from slope and backslope to form camber
Gravel in two layers total thickness 0.20 compacted. (Lower layer may be coarser material)

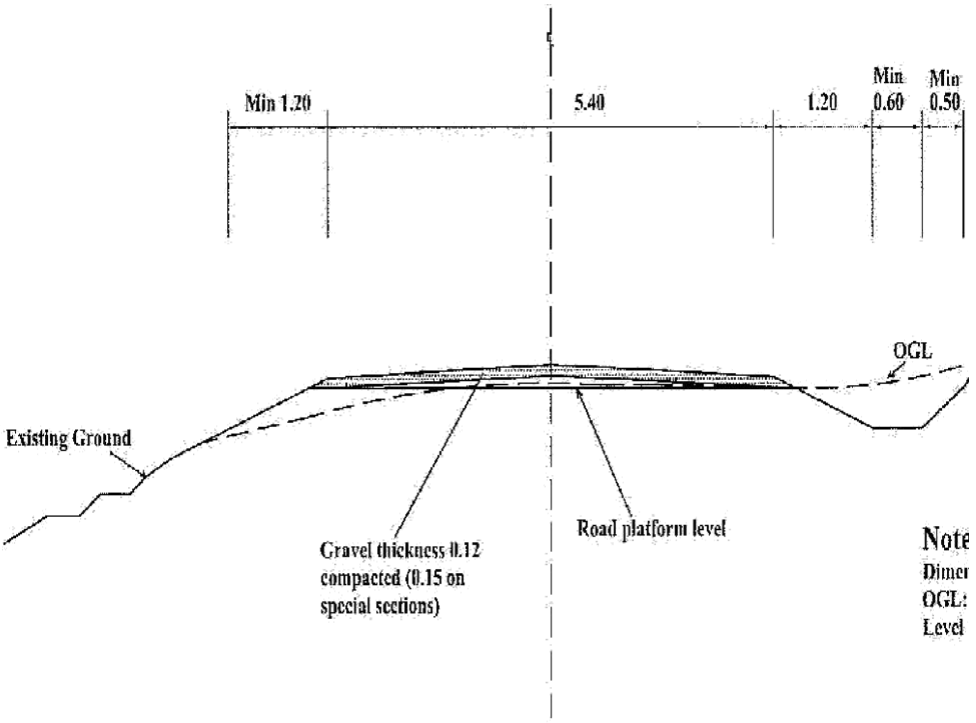
Min 1.20
5.40
1.20
Min
0.60
Min
0.50
OGL
Existing Ground
Gravel thickness 0.12
compacted (0.15 on
special sections)
Road platform level
Note
Dimer
OGL:
Level

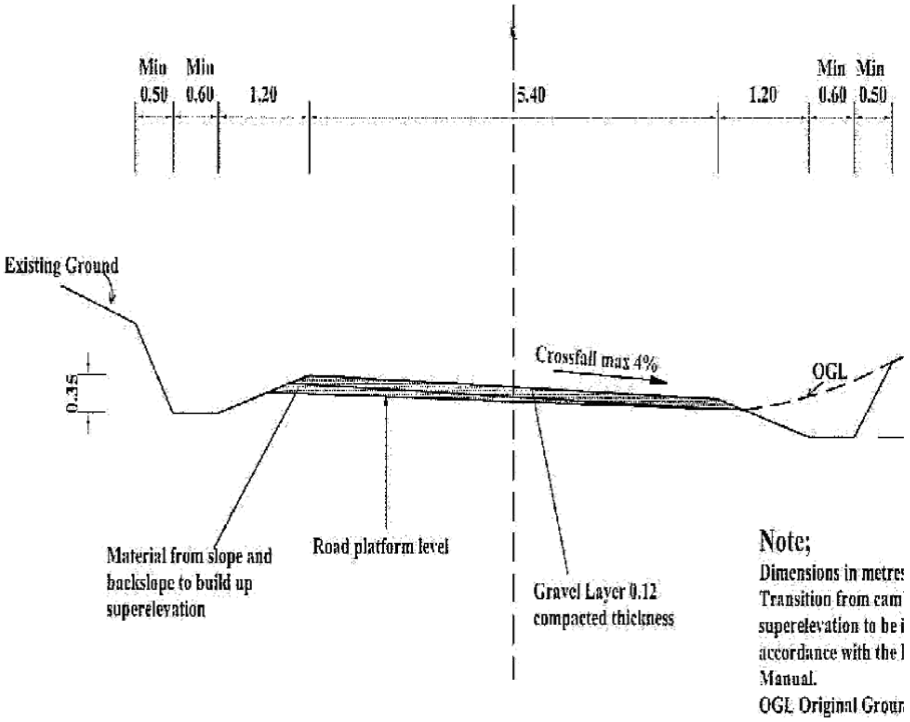
Min
0.50
Min
0.60
1.20
5.40
1.20
Min
0.60
Min
0.50
Existing Ground
0.35
Crossfall max 4%
OGL
Material from slope and backslope to build up superelevation
Road platform level
Gravel Layer 0.12 compacted thickness
Note;
Dimensions in metre
Transition from cam
superelevation to be i
accordance with the
Manual.
OGL Original Grou

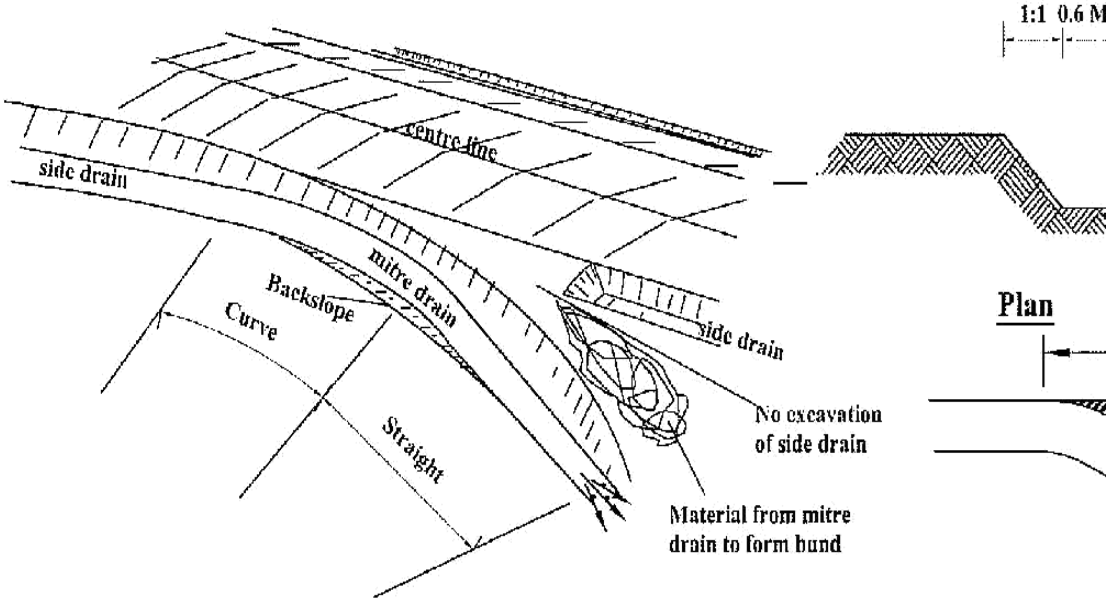

Mitre dr
Cross Se

1:1 0.6 M

Plan

Notes

Location,direction and length of th
by the Engineer

C-6

Scour checks made of wooden stakes

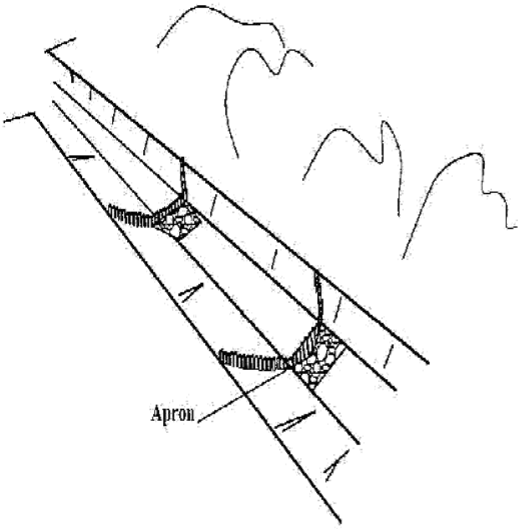

Scour checks made of stones

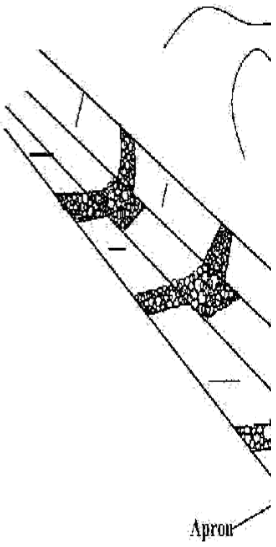

Scour checks made of stones

Cross section

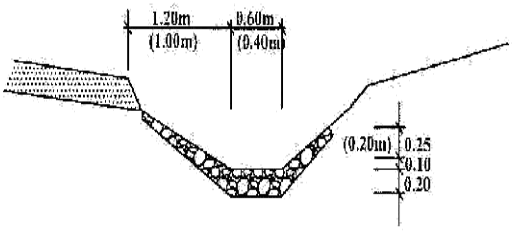

Ground plan

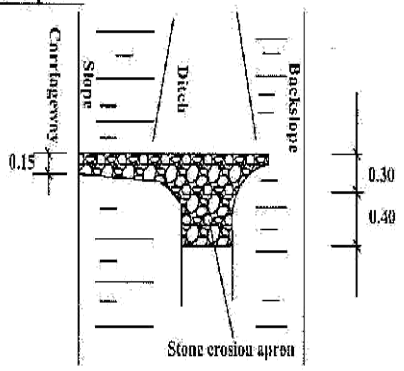

NOTE
1.Dimensions in metres

Scour checks mad

Cross section

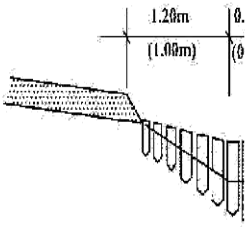

Ground plan

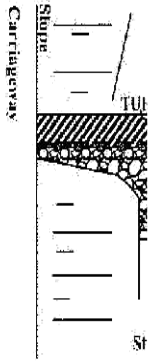

STONE WEIGHT:MIN 10KG
STAKE DIAMETER: MIN. 0.1(

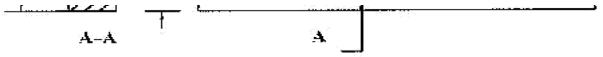

Note
1.Dimensions in mm

SECTION OF MASONRY SCOUR CHECK

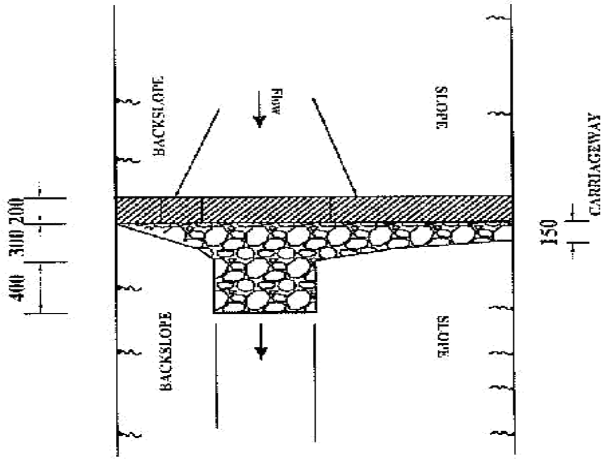

PLAN OF DRAIN WITH SCOUR CHECK

Cross-Section	Sizes in mm			Excav (m3)	Concrete (m3)	Apron stone pitching (m3)
	Length	Width	Depth			
A	2400	300	550	0.22	0.25	0.18
B	2000	200	500	0.18	0.2	0.14

SECTION OF CONCRETE SCOUR CHECK

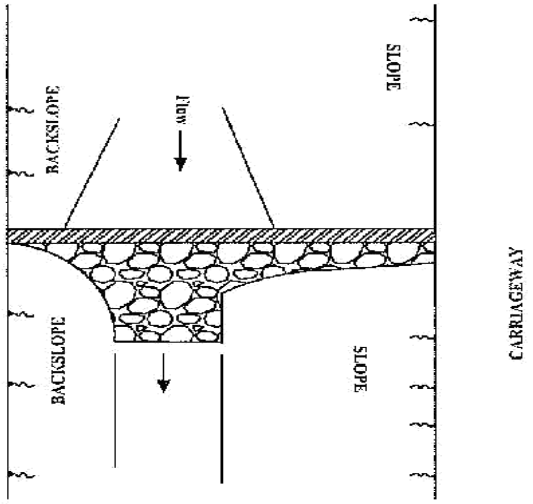

NOTE
1.Dimensions in mm

PLAN OF DRAIN WITH SCOUR CHECK

Cross-Section	Sizes in mm			Excav (m3)	Concrete (m3)	Apron stone pitching (m3)
	Length	Width	Depth			
A	2400	100	550	0.13	0.15	0.18
B	2000	100	500	0.10	0.09	0.14

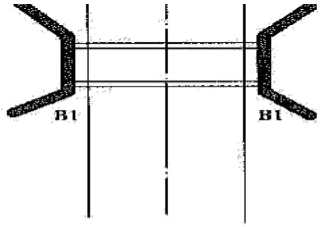

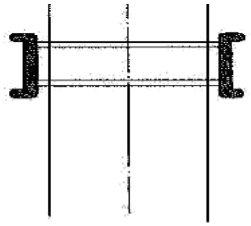

TYPE 2(ENTRY ONLY)

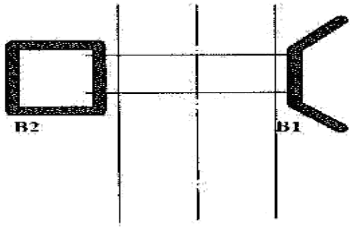

TYPE 4(ENTRY AND EXIT ON ACCESS)

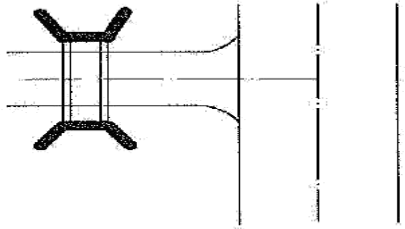

NOTE
1. The code numbers specify the shape and function and the code letter denotes the material:
A =Concrete block
B =Stone masonry
C =Concrete

SECTION A-A

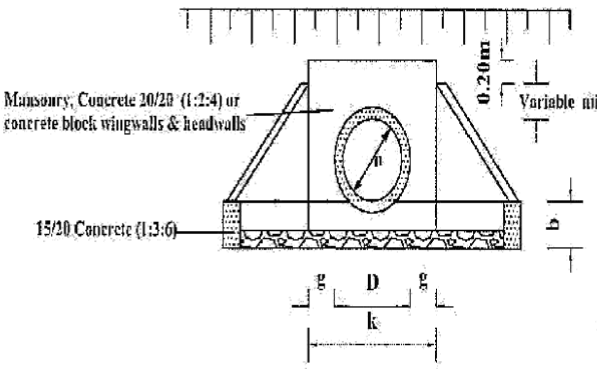

SECTION B-B

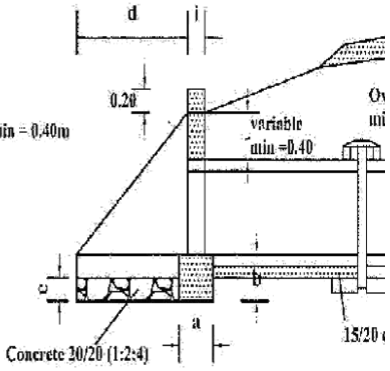

PLAN

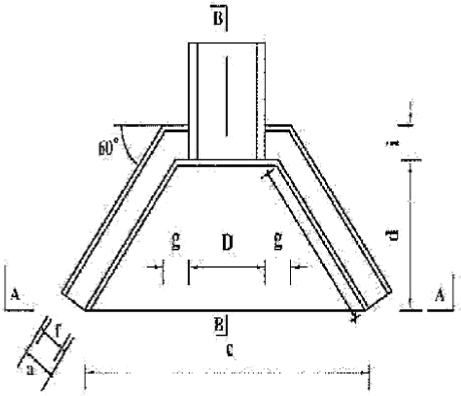

CULVERT TYPES	
X-SECTION WIDTH m	No. of pipes
4.50	6
5.50	7
6.50	8

PIPE DIAMETER IN M		TYPE A and C CONCRETE BL	
		450	600
DIMENSION	UNIT		
a FOUNDATION	m	0.30	0.30
b FOUNDATION	m	0.30	0.30
c FOUNDATION	m	2.20	2.35
d APRON	m	1.00	1.00
e APRON	m	0.20	0.20
f WALL	m	0.20	0.20
g WALL	m	0.30	0.30
h WALL	m	1.15	1.15
i WALL	m	0.20	0.20
k APRON	m	1.05	1.20
MATERIAL REQUIREMENT			
FOUNDATION (concrete)	m3	0.30	0.32
HEAD/WINGWALLS (Conrete/Masonry)	m3	0.42	0.49
APRON (concrete)	m3	0.33	0.36

SECTION A-A

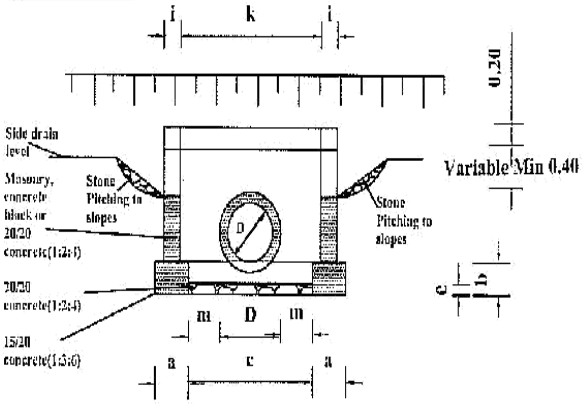

SECTION B-B

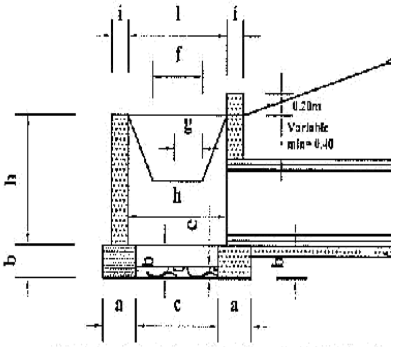

DIMENSIONS AND MATERIAL REQUIREMENTS

PIPE DIAMETER IN (M)		TYPE A CONCRETE BLOCKS			TY MA
		450	600	900	45
DIMENSION	UNIT				
a FOUNDATION	m	0.30	0.30	0.30	0.4
b FOUNDATION	m	0.30	0.30	0.30	0.3
c FOUNDATION	m	1.10	1.10	1.40	1.2
d APRON	m	0.90	0.90	0.90	1.0
e APRON	m	0.20	0.20	0.20	0.2
f DROP INLET	m	0.60	0.60	0.60	0.6
g DROP INLET	m	0.30	0.40	0.60	0.3
h DROP INLET	m	0.60	0.80	1.20	0.6
i DROP INLET	m	0.20	0.20	0.20	0.4
k DROP INLET	m	1.20	1.20	1.50	1.2
l DROP INLET	m	1.00	1.00	1.00	1.0
m DROP INLET	m	0.38	0.30	0.30	0.3
MATERIAL REQUIREMENT					
FOUNDATION (concrete)	m3	0.47	0.47	0.52	0.7
HEAD/WINGWALLS (Concrete/Masonry)	m3	0.56	0.72	1.15	1.2
APRON (concrete)	m3	0.24	0.24	0.30	0.2

PLAN

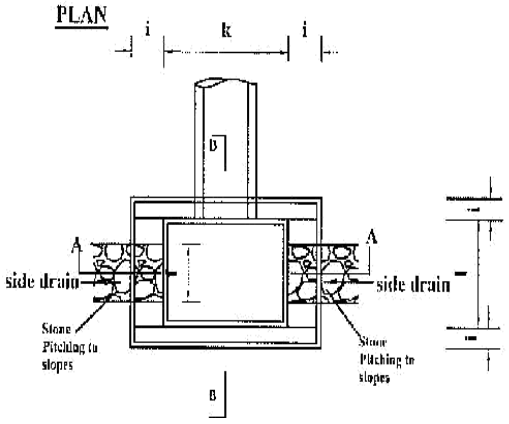

C-12

SECTION A-A

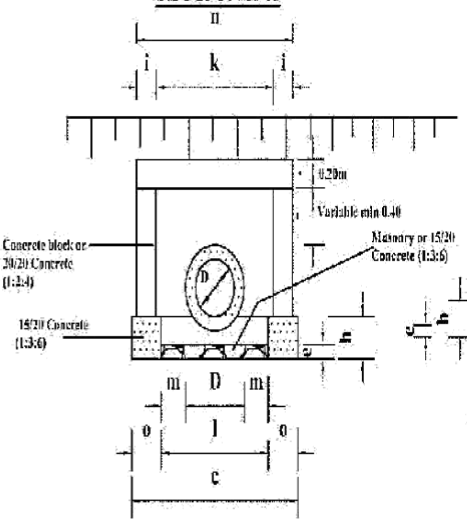

SECTION B-B

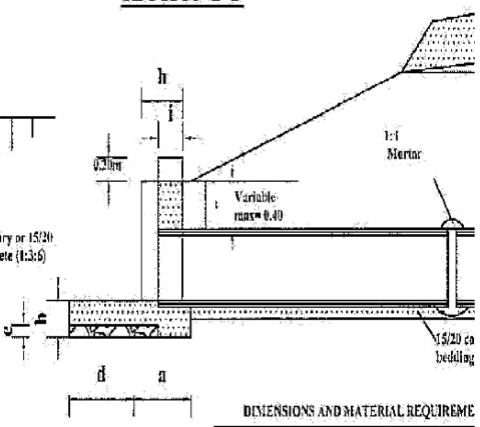

PLAN

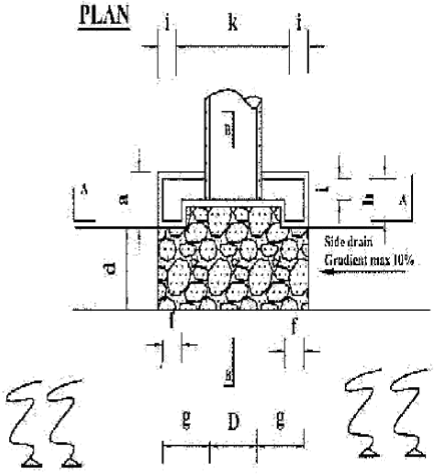

DIMENSIONS AND MATERIAL REQUIREME

	PIPE DIAMETER IN (M)		TYPE A and C CO BLOCKS	
			450	600
	DIMENSION	UNIT		
a	FOUNDATION	m	0.50	0.50
b	FOUNDATION	m	0.30	0.30
c	FOUNDATION	m	1.55	1.70
d	APRON	m	0.60	0.60
e	APRON	m	0.20	0.20
f	HEADWALL	m	0.20	0.20
g	HEADWALL	m	0.50	0.50
h	HEADWALL	m	0.50	0.50
i	HEADWALL	m	0.50	0.50
k	HEADWALL	m	0.50	0.50
l	FOUNDATION	m	0.50	0.50
m	FOUNDATION	m	0.50	0.50
n	HEADWALL	m	0.50	0.50
o	FOUNDATION	m	0.50	0.50
MATERIAL REQUIREMENT				
	FOUNDATION (concrete)		0.23	0.19
	HEADWING WALLS (Concrete/Masonry)		0.34	0.37
	APRON (concrete)		0.05	0.09

SECTION A-A

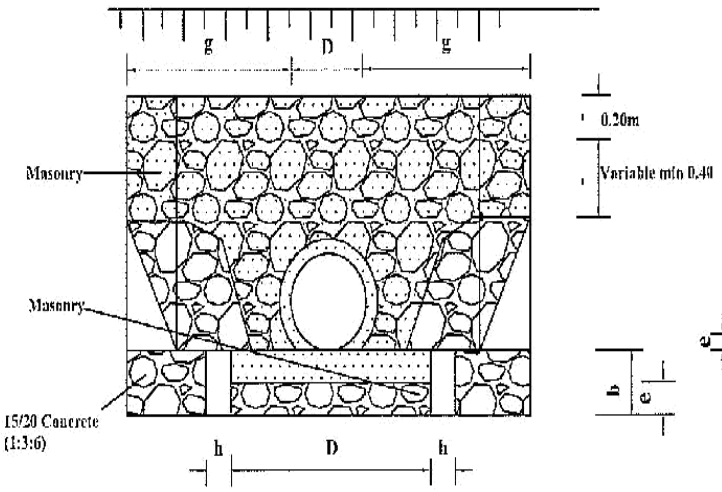

SECTION B-B

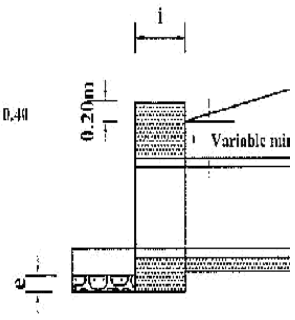

PLAN

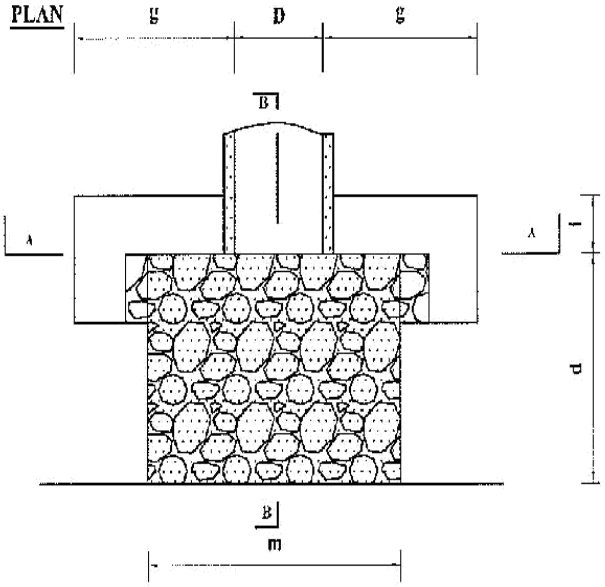

DIMENSIONS AND

PIPE DIAMETER (M)
DIMENSION
a FOUNDATIO
b FOUNDATIO
c FOUNDATIO
d APRON
e APRON
f HEADWALL
g HEADWALL
h HEADWALL
i HEADWALL
m FOUNDATIO
MATERIAL REQ
FOUNDATIO (concrete)
HEAD/WING (Conrete/Maso
APRON (concrete)

SECTION A-A

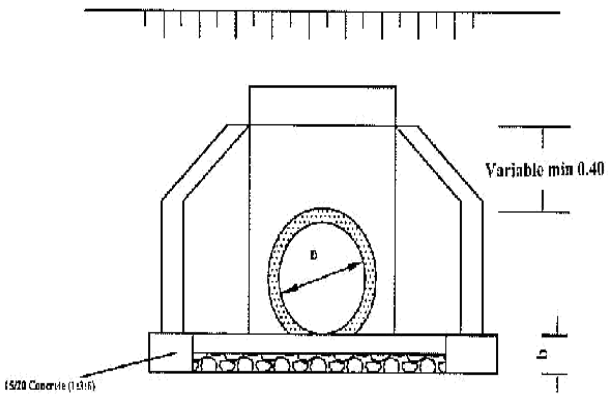

PLAN

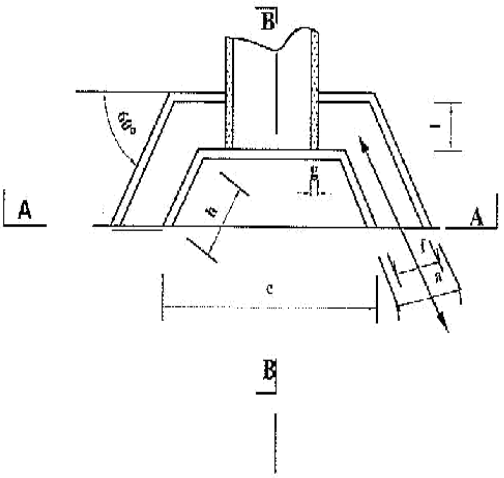

SECTION B-B

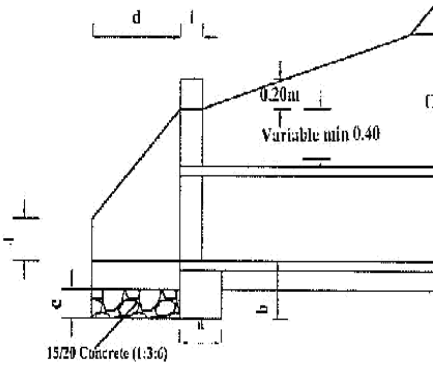

DIMENSIONS AND MATERIAL REQUIREMENTS

PIPE DIAMETER IN (M)			TYPE A (CONCRETE BLOCKS) 450	600	900
	DIMENSION	UNIT			
a	FOUNDATION	m	0.30	0.30	
b	FOUNDATION	m	0.30	0.30	
c	APRON	m	1.34	1.49	
d	APRON	m	0.60	0.60	
e	APRON	m	0.20	0.20	
f	WINGWALLS	m	0.20	0.20	
g	WINGWALLS	m	0.10	0.10	
h	HEADWALLS	m	0.69	0.69	
j	HEADWALLS	m	0.20	0.20	
k	HEADWALLS	m	0.65	0.80	
l	HEADWALLS	m	0.40	0.40	
MATERIAL REQUIREMENT					
FOUNDATION (concrete blocks)			0.18	0.20	
HEAD/WINGWALLS (Conrete/Masonry)			0.28	0.32	
APRON (concrete)			0.12	0.14	

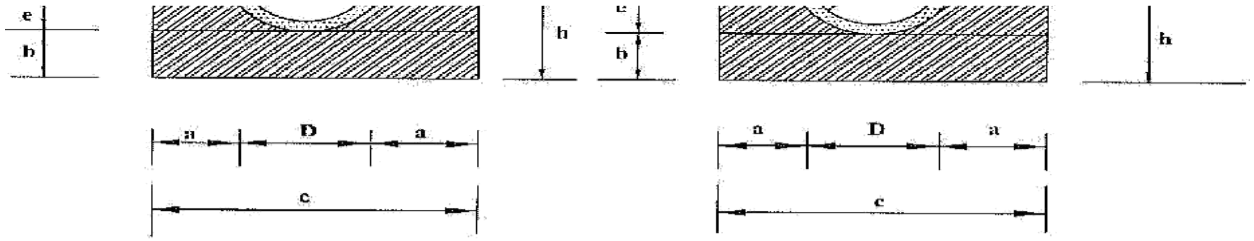

Diameter (D)	450 (mm)	600 (mm)	900 (mm)
a	0.15	0.20	0.20
b	0.10	0.15	0.15
c	0.86	1.12	1.48
d	0.56	0.72	1.08
e	0.14	0.18	0.27
f(min)	0.34	0.45	0.68
g	-	-	-
h	0.24	0.33	0.42
i	-	-	-
Concrete	Volume in (m3/m)		
Class 15/20	0.24	0.24	0.24
Application	-Fair subgrade condition -Overfill > 75% of the pipe diameter -Seasonal water flow only		
Remarks	Material for back/overfill shall be approved by the Engineer		

450 (mm)	600 (mm)	900 (mm)
0.15	0.20	0.20
0.10	0.15	0.15
0.86	1.12	1.48
0.56	0.72	1.08
0.28	0.36	0.54
0.34	0.45	0.68
-	-	-
0.38	0.51	0.69
-	-	-
Volume in (m3/m)		
0.20	0.37	0.56
-Fair to poor subgrade condition -Overfill > 75% of the pipe diameter -Seasonal water flow only		
Material for back/overfill shall be approved by the Engineer		

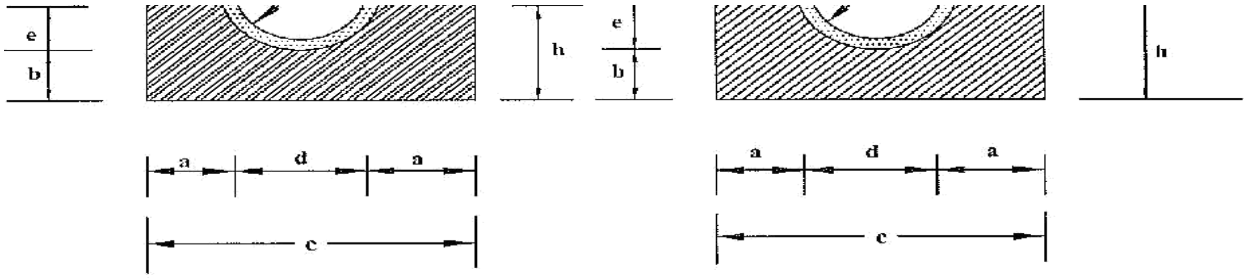

Diameter (D)	450 (mm)	600 (mm)	900 (mm)
a	0.15	0.20	0.20
b	0.10	0.15	0.15
c	0.86	1.12	1.48
d	0.56	0.72	1.08
e	0.42	0.54	0.81
f(min)	0.23	0.3	0.45
g	-	-	-
h	0.52	0.69	0.96
i	-	-	-
Concrete	Volume in (m3/m)		
Class 15/20	0.26	0.47	0.71
Application	-Fair subgrade condition -Overfill > 75% of the pipe diameter -Seasonal water flow only		
Remarks	Material for back/overfill shall be approved by the Engineer		

450 (mm)	600 (mm)	900 (mm)
0.15	0.20	0.20
0.10	0.15	0.15
0.86	1.12	1.48
0.56	0.72	1.08
0.46	0.52	0.78
0.15	0.15	0.15
0.15	0.15	0.15
0.81	1.02	1.38
0.28	0.35	0.45
Volume in (m3/m)		
0.37	0.61	0.92
-Fair to poor subgrade condition -Overfill > 75% of the pipe diameter -Seasonal water flow only		
Material for back/overfill shall be approved by the Engineer		

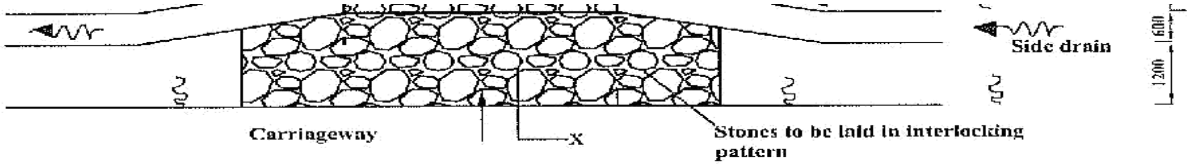

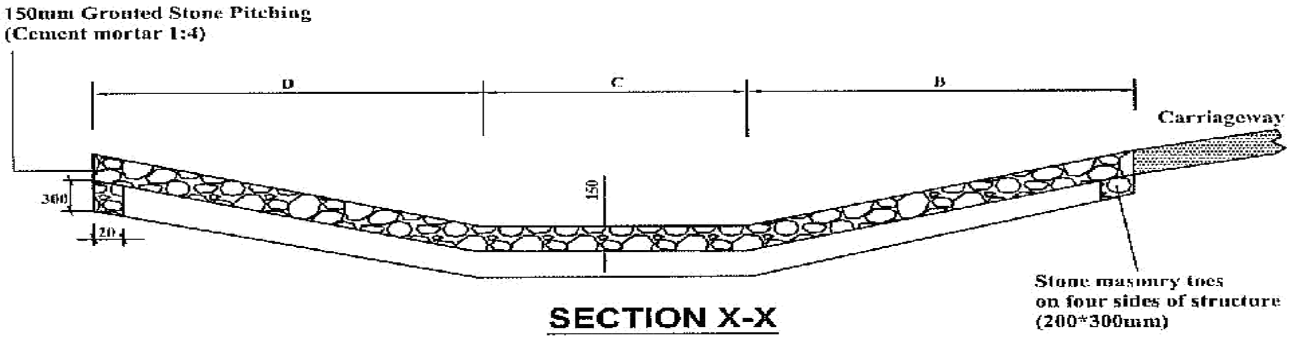

SECTION X-X

QUANTITIES TABLE								
Cross section	DIMENSONS					Excavation(m3)	Stone masonry (m3)	150mm Grouted stone pitching(m3)
	A	B	C	D	E			
A	4000	1800	600	1800	4200	7.5	1.30	21.75
	6000	1800	600	1800	4200	10.00	1.60	30.15
B	4000	1400	400	1800	3600	7.00	1.20	18.30
	6000	1400	400	1800	3600	9.00	1.50	25.50

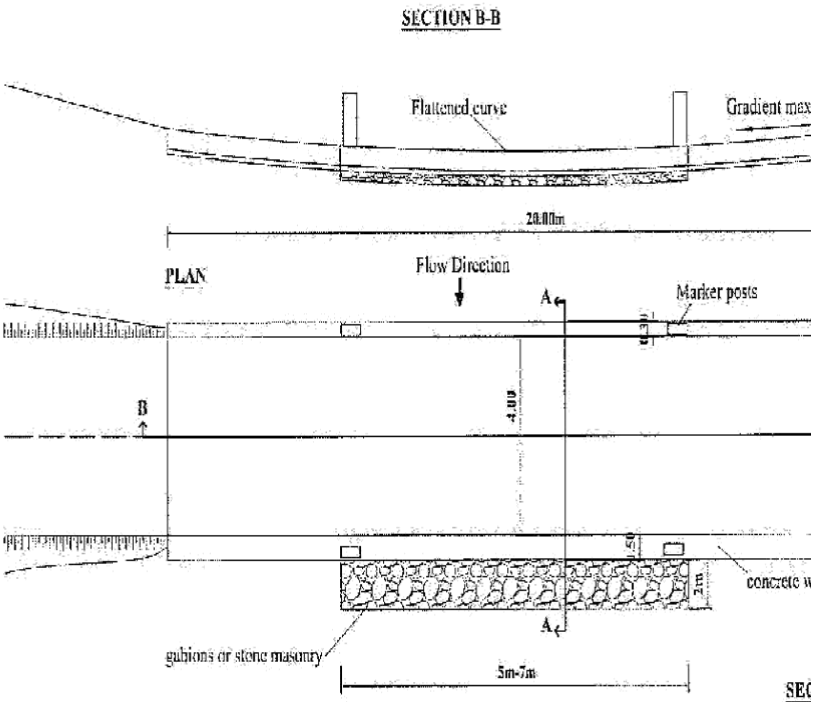

Material : All concrete Class 20/20 (1:2:4)

1 Concrete wall : 10m³
2 Concrete slab: 24m³ or stone masonry
3 Concrete toe : 8m³ or stone masonry
4 Gabions / mattress rock fill: 4.3m³ or stone masonry
5 Gabions /mattress: 36m²
6 Marker posts - precast concrete: 4 no.
7 Excavation (slab + toes + gabions) 54.2m³

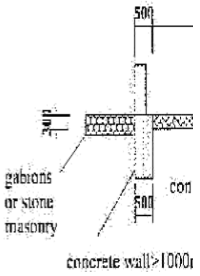

SECTION A-A

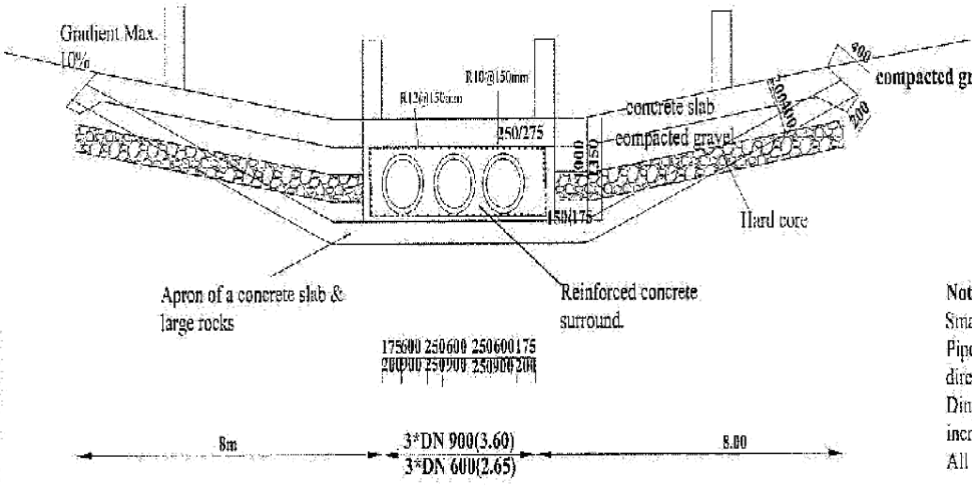

Not
Sma
Pipe
dire
Din
incr
All

PLAN

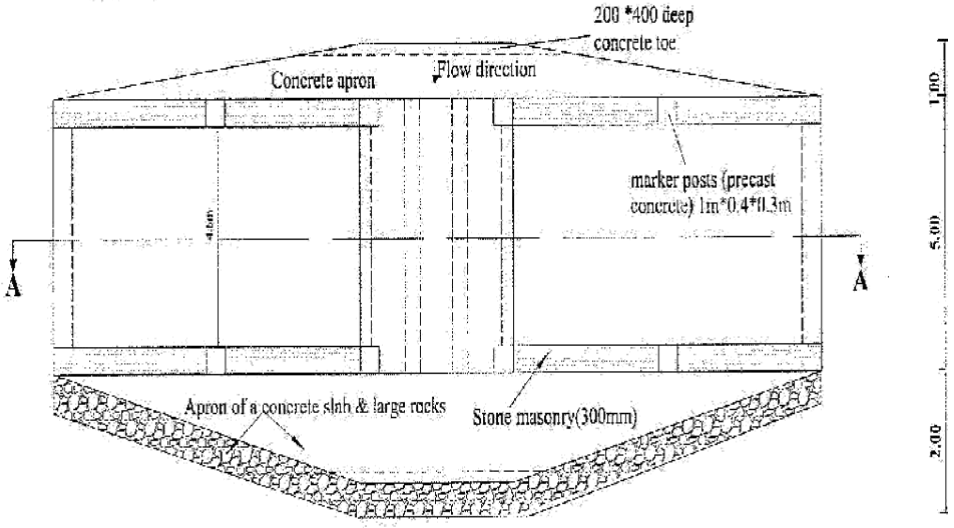

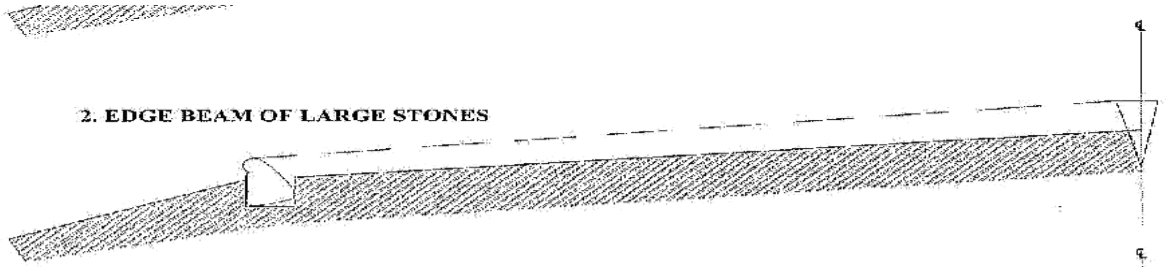

2. EDGE BEAM OF LARGE STONES

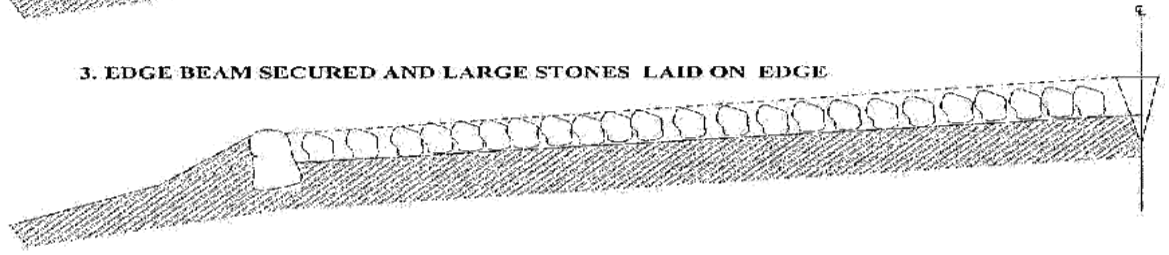

3. EDGE BEAM SECURED AND LARGE STONES LAID ON EDGE

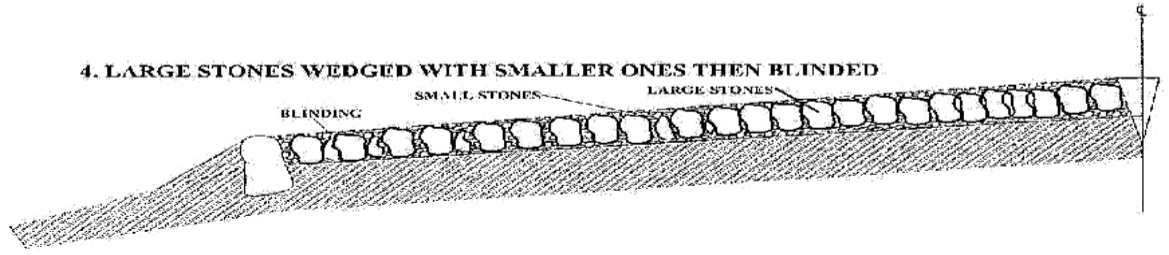

4. LARGE STONES WEDGED WITH SMALLER ONES THEN BLINDED

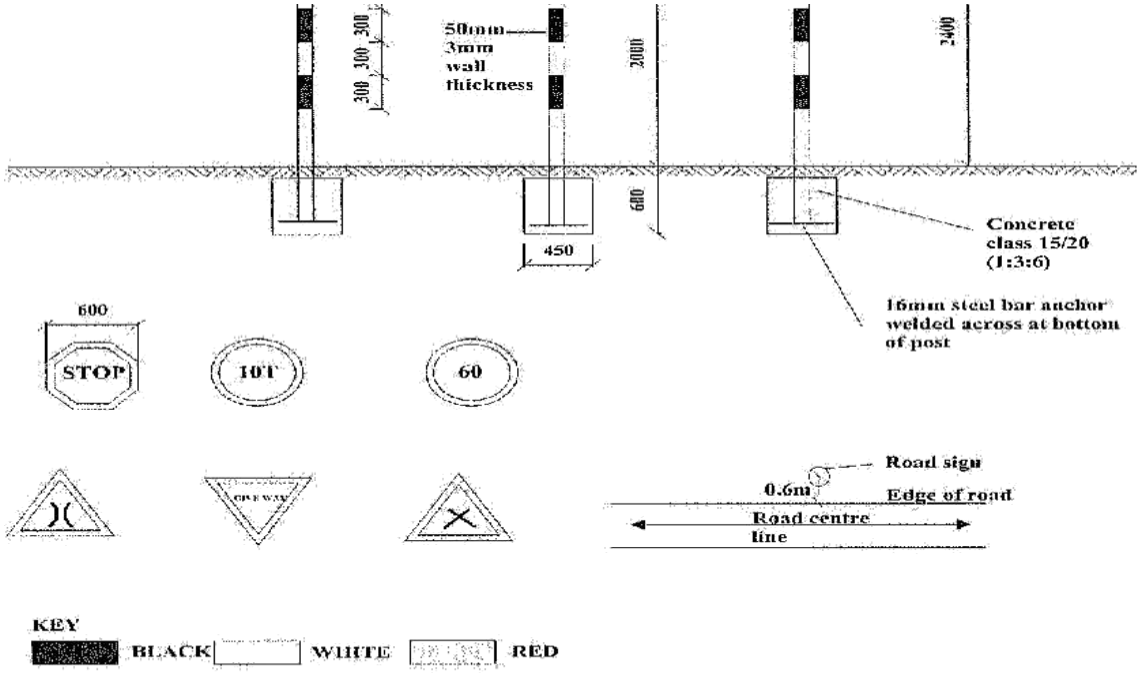

1. The type of sign required and their location shall be as shown on the Road Plan or as directed by the Engineer.
2. Sign plate to be 2mm thick mild steel plate
3. Sign post to be 50mm fixing clamps/brackets.
4. Sign plate to be fixed to steel tube by 8 Nos M10 bolts and 50mm fixing clamps/brackets.
5. Sign paints shall be reflective.
6. The sign plate and post shall be treated by applying two coats of lead red oxide paint before applying a priming and two finish coats of approved paints. Paints used shall have a hard, durable and glossy finish.

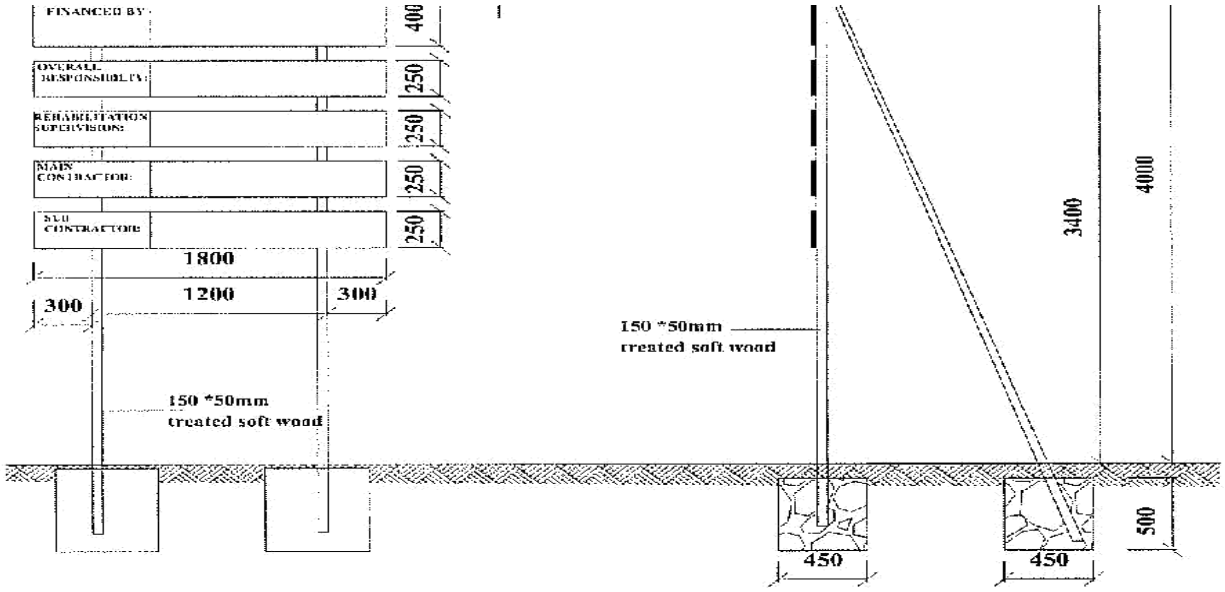

NOTES

1. The wording of the project sign board and the location to be as directed by the Engineer.
2. Materials to be used for fabrication of signboard shall be pressure impregnated treated softwood timber
3. Wording board posts to be attached to the posts with galvanised nails
4. Project board posts and struts to be embedded in concrete class 20/20(1:2:4)

SUPPLEMENTARY INFORMATION

PART 3 – CONDITIONS OF CONTRACT AND CONTRACT FORMS

Section VIII - General Conditions of Contract 1. GENERAL CONDITIONS

1.1 General Provisions

1.1.1 Definitions

In the Conditions of Contract ("these Conditions"), which include Particular Conditions, Parts A and B, and these General Conditions, the following words and expressions shall have the meanings stated. Words indicating persons or parties include corporations and other legal entities, except where the context requires otherwise.

1.1.2 The Contract

"Bills of Quantities", "Daywork Schedule" and "Schedule of Payment Currencies" mean the documents so named (if any) which are comprised in the Schedules.

"Contract Agreement" means the contract agreement referred to in Sub-Clause 1.6 [Contract Agreement].

"Contract" means the Contract Agreement, the Letter of Acceptance, the Letter of Tender, these Conditions, the Specification, the Drawings, the Schedules, and the further documents (if any) which are listed in the Contract Agreement or in the Letter of Acceptance.

"Drawings" means the drawings of the Works, as included in the Contract, and any additional and modified drawings issued by (or on behalf of) the Procuring Entity in accordance with the Contract.

"Laws" means all national legislation, statutes, ordinances, and regulations and by-laws of any legally constituted public authority.

"Letter of Acceptance" means the letter of formal acceptance, signed by the contractor and the Procuring Entity, including any annexed memoranda comprising agreements between and signed by both Parties.

"Letter of Tender" means the document entitled letter of tender or letter of tender, which was completed by the Contractor and includes the signed offer to the Procuring Entity for the Works.

60. "SCC" means the Special Conditions of Contract completed by the Procuring Entity which modify the General Conditions of Contract.

"Schedules" means the document(s) entitled schedules, completed by the Contractor and submitted with the Letter of Tender, as included in the Contract. Such document may include the Bills of Quantities, data, lists, and schedules of rates and/or prices.

"Specification" means the document entitled specification, as included in the Contract, and any additions and modifications to the specification in accordance with the Contract.Such document specifies the Works.

"Tender" means the Letter of Tender and all other documents which the Contractor submitted with the Letter of Tender, as included in the Contract.

1.1.3 Parties and Persons

"Contractor's Personnel" means the Contractor's Representative and all personnel whom the Contractor utilizes on Site, who may include the staff, labor and other employees of the Contractor and of each Subcontractor; and any other personnel assisting the Contractor in the execution of the Works.

"Contractor's Representative" means the person named by the Contract or in the Contractor appointed from time to time by the Contractor under Sub-Clause 4.3 [Contractor's Representative], who acts on behalf of the Contractor.

"Contractor" means the person(s) named as contractor in the Letter of Tender accepted by the Procuring Entity and the legal successors in title to this person(s).

"Engineer" means the person appointed by the Procuring Entity to act as the Engineer for the purposes of the Contract and named in the **SCC**, or other person appointed from time to time by the Procuring Entity and

notified to the Contractor under Sub-Clause 3.4 [Replacement of the Engineer].
"Party" means the Procuring Entity or the Contractor, as the context requires.

"Procuring Entity" means the Entity named in the Special Conditions of Contract.

"Procuring Entity's Personnel" means the Engineer, the assistants referred to in Sub-Clause 3.2 [Delegation by the Engineer] and all other staff, labor and other employees of the Engineer and of the Procuring Entity; and any other personnel notified to the Contractor, by the Procuring Entity or the Engineer, as Procuring Entity's Personnel.

"Procuring Entity" means the person named as Procuring Entity in the **SCC** and the legal successors in title to this person.

"Subcontractor" means any person named in the Contract as a subcontractor, or any person appointed as a subcontractor, for a part of the Works; and the legal successors in title to each of these persons.

1.1.4 Dates, Tests, Periods and Completion

"Base Date" means a date 30 day prior to the submission of tenders.

"Commencement Date" means the date notified under Sub-Clause 8.1 [Commencement of Works].

"Completion Certificate" means the certificate issued under Sub-Clause 11.9 [Performance

Certificate]. **"Day"** means a calendar day and "year" means 365 days.

"Defects Notification Period" means the period for notifying defects in the Works or a Section (as the case may be) under Sub-Clause 11.1 [Completion of Outstanding Work and Remedying Defects], which extends over 365 days except if otherwise stated in the **SCC** (with any extension under Sub-Clause 11.3 [Extension of Defects Notification Period]), calculated from the date on which the Works or Section is completed as certified under Sub-Clause 10.1[Taking Over of the Works and Sections].

"Taking-Over Certificate" means a certificate issued under Clause 10 [Procuring Entity's Taking Over].

"Tests after Completion" means the tests (if any) which are specified in the Contract and which are carried out in accordance with the Specification after the Works or a Section (as the case may be) are taken over by the Procuring Entity.

"Tests on Completion" means the tests which are specified in the Contract or agreed by both Parties or instructed as a Variation, and which are carried out under Clause 9 [Tests on Completion] before the Works or a Section (as the case may be) are taken over by the Procuring Entity.

"Time for Completion" means the time for completing the Works or a Section (as the case may be) under Sub- Clause 8.2 [Time for Completion], as stated in the **SCC** (with any extension under Sub-Clause 8.4 [Extension of Time for Completion]), calculated from the Commencement Date.

1.1.5 Money and Payments

"Accepted Contract Amount" means the amount accepted in the Letter of Acceptance for the execution and completion of the Works and the remedying of any defects.

"Contract Price" means the price defined in Sub-Clause 14.1 [The Contract Price] and includes adjustments in accordance with the Contract.

"Cost" means all expenditure reasonably incurred (or to be incurred) by the Contractor, whether on or off the Site, including overhead and similar charges, but does not include profit.

"Final Payment Certificate" means the payment certificate issued under Sub-Clause 14.13 [Issue of Final Payment Certificate].

"Final Statement" means the statement defined in Sub-Clause 14.11 [Application for Final Payment

Certificate].
"Foreign Currency" means acurrency in which part (orall) of the Contract Price is payable, but not the Local Currency.

"Interim Payment Certificate" means a payment certificate issued under Clause 14 [Contract Price and Payment], other than the Final Payment Certificate.

"Local Currency" means the currency of the Country.

"Payment Certificate" means a payment certificate issued under Clause 14 [Contract Price and Payment].

"Provisional Sum" means a sum (if any) which is specified in the Contract as a provisional sum, for the execution of any part of the Works or for the supply of Plant, Materials or services under Sub-Clause 13.5 [Provisional Sums].

"Retention Money" means the accumulated retention moneys which the Procuring Entity retains under Sub-Clause 14.3 [Application for Interim Payment Certificates] and pays under Sub-Clause 14.9 [Payment of Retention Money].

"Statement" means a statement submitted by the Contractor as part of an application, under Clause 14 [Contract Price and Payment], for a payment certificate.

1.1.6 Works and Goods

"Contractor's Equipment" means all apparatus, machinery, vehicles and other things required for the execution and completion of the Works and the remedying of any defects. However, Contractor's Equipment excludes Temporary Works, Procuring Entity's Equipment (if any), Plant, Materials and any other things intended to form or forming part of the Permanent Works.

"Goods" means Contractor's Equipment, Materials, Plant and Temporary Works, or any of them as appropriate.

"Materials" means things of all kinds (other than Plant) intended to form or forming part of the Permanent Works, including the supply-only materials (if any) to be supplied by the Contractor under the Contract.

"Permanent Works" means the permanent works to be executed by the Contractor under the Contract.

"Plant" means the apparatus, machinery and other equipment intended to form or forming part of the Permanent Works, including vehicles purchased for the Procuring Entity and relating to the construction or operation of the Works.

"Section" means a part of the Works specified in the **SCC** as a Section (if any).

"Temporary Works" means all temporary works of every kind (other than Contractor's Equipment) required on Site for the execution and completion of the Permanent Works and the remedying of any defects.

"Works" mean the Permanent Works and the Temporary Works, or either of them as appropriate.

1.1.7 Other Definitions

"Contractor's Documents" means the calculations, computer programs and other software, drawings, manuals, models and other documents of a technical nature (if any) supplied by the Contractor under the Contract.

"Country" means Kenya as the country in which the Site is located, where the Permanent Works are to be executed.

"Force Majeure" is defined in Clause 19 [Force Majeure].

"Laws" means all national (or state) legislation, statutes, ordinances and other laws, and regulations and by-laws of any legally constituted public authority.

"Notice of Dissatisfaction" means the notice given by either Party to the other under Sub-Clause 20.4

indicating its dissatisfaction and intention to commence arbitration.
"Performance Security" means the security (or securities, if any) under Sub-Clause 4.2 [Performance Security].

"Procuring Entity's Equipment" means the apparatus, machinery and vehicles (if any) made available by the Procuring Entity for the use of the Contractor in the execution of the Works, as stated in the Specification; but does not include Plant which has not been taken over by the Procuring Entity.

"Site" means the places where the Permanent Works are to be executed, including storage and working areas, and to which Plant and Materials are to be delivered, and any other places as may be specified in the Contract as forming part of the Site.

"Unforeseeable" means not reasonably foreseeable by an experienced contractor by the Base Date.

"Variation" means any change to the Works, which is instructed or approved as a variation under Clause 13 [Variations and Adjustments].

1.2 Interpretation

In the Contract, except where the context requires otherwise:

a) Words indicating one gender include all genders;
b) words indicating the singular also include the plural and words indicating the plural also include the singular;
c) provisions including the word "agree", "agreed" or "agreement" require the agreement to be recorded in writing;
d) "written" or "inwriting" means hand-written, type-written, printed or electronically made, and resulting in a permanent record; and
e) the word "tender" is synonymous with "tender" and "tenderer" with "Tenderer" and the words "tender documents" with "tendering documents."

1.3 Communications

1.3.1 Wherever these Conditions provide for the giving or issuing of approvals, certificates, consents, determinations, notices, requests and discharges, these communications shall be:

a) In writing and delivered by hand (against receipt), sent by mail or courier, or transmitted using any of the agreed systems of electronic transmission as stated in the **SCC**; and
b) delivered, sent or transmitted to the address for the recipient's communications as stated in the **SCC**. However:
    i) if the recipient gives notice of another address, communications shall thereafter be delivered accordingly; and
    ii) if the recipient has not stated otherwise when requesting an approval or consent, it may be sent to the address from which the request was issued.

1.3.2 Approvals, certificates, consents and determinations shall not be unreasonably withheld or delayed. When a certificate is issued to a Party, the certifier shall send a copy to the other Party. When a notice is issued to a Party, by the other Party or the Engineer, a copy shall be sent to the Engineer or the other Party, as the case may be.

1.4 Law andLanguage

1.4.1 The Contract shall be governed by the **laws of Kenya**.

1.4.2 The ruling language of the Contract shall be the **English Language.**

1.5 Priority of Documents

1.5.1 The documents forming the Contract are to be taken as mutually explanatory of one another. For the purposes of interpretation, the priority of the documents shall be in accordance with the following sequence:

a) The Contract Agreement,
b) theLetterofAcceptance,

c) the Particular Conditions–Part A,
d) the Particular Conditions–Part B
e) the General Conditions of Contract
f) the Form of Tender,
g) the Specifications and Bills of Quantities
h) the Drawings, and
i) the Schedules and any other documents forming part of the Contract.

1.5.2 If an ambiguity or discrepancy is found in the documents, the Engineer shall issue any necessary clarification or instruction.

1.6 Contract Agreement

The Parties shall enter into a Contract Agreement within 14 days after the Contractor receives the Letter of Acceptance, unless the Particular Conditions establish otherwise. The Contract Agreement shall bebasedupon the form annexed to the Particular Conditions. The costs of stamp duties and similar charges (if any) imposed by law in connection with entry into the Contract Agreement shallbe borne by the Procuring Entity.

1.7 Assignment

Neither Party shall assign the whole or any part of the Contract or any benefit or interest in or under the Contract. However, either Party:

a) May assign the whole or any part with the prior agreement of the other Party, at the sole discretion of such other Party, and
b) may, as security in favor of a Procuring Entity or financial institution, assign its right to any moneys due, or to become due, under the Contract.

1.8 Care and Supply of Documents

1.8.1 The Specification and Drawings shall be in the custody and care of the Procuring Entity. Unless otherwise stated in the Contract, two copies of the Contract and of each subsequent Drawing shall be supplied to the Contractor, who may make or request further copies at the cost of the Contractor.

1.8.2 Each of the Contractor's Documents shall be in the custody and care of the Contractor, unless and until taken over by the Procuring Entity. Unless otherwise stated in the Contract, the Contractor shall supply to the Engineer

1.8.3 The Contractor shall keep, on the Site, a copy of the Contract, publications named in the Specification, the Contractor's Documents (if any), the Drawings and Variations and other communications given under the Contract. The Procuring Entity's Personnel shall have the right of access to all these documents at all reasonable times.

1.8.4 If a Party becomes aware of an error or defect in a document which was prepared for use in executing the Works, the Party shall promptly give notice to the other Party of such error or defect.

1.9 Delayed Drawings or Instructions

1.9.1 The Contractor shall give notice to the Engineer whenever the Works are likely to be delayed or disrupted if any necessary drawing or instruction is not issued to the Contractor within a particular time, which shall be reasonable. The notice shall include details of the necessary drawing or instruction, details of why and by when it should be issued, and the nature and amount of the delay or disruption likely to be suffered if it is late.

If the Contractor suffers delay and/or incurs Cost as a result of a failure of the Engineer to issue the notified drawing or instruction within a time which is reasonable and is specified in the notice with supporting details, the Contractor shall give a further notice to the Engineer and shall be entitled subject to Sub-Clause 20.1 [Contractor's Claims] to:

a) an extension of time for any such delay, if completion is or will be delayed, under Sub-Clause 8.4 [Extension of Time for Completion], and
b) payment of any such Cost-plus profit, which shall be included in the Contract Price.

1.9.2 After receiving this further notice, the Engineer shall proceed in accordance with Sub-Clause 3.5 [Determinations] to agree or determine these matters.

1.9.3 However, if and to the extent that the Engineer's failure was caused by any error or delay by the Contractor, including an error in, or delay in the submission of, any of the Contractor's Documents, the Contractor shall not be entitled to such extension of time, Cost or profit.

1.10 Procuring Entity's Use of Contractor's Documents

1.10.1 As between the Parties, the Contractor shall retain the copyright and other intellectual property rights in the Contractor's Documents and other design documents made by (or on behalf of) the Contractor. The Contractor shall be deemed (by signing the Contract) to give to the Procuring Entity a non-terminable transferable non-exclusive royalty-free license tocopy, use and communicate the Contractor's Documents, including making and using modifications of them. This license shall:

a) apply throughout the actual or intended working life (whichever is longer) of the relevant parts of the Works,

b) entitle any person in proper possession of the relevant part of the Works to copy, use and communicate the Contractor's Documents for the purposes of completing, operating, maintaining, altering, adjusting, repairing and demolishing the Works, and

c) in the case of Contractor's Documents which are in the form of computer programs and other software, permit their use on any computer on the Site and other places as envisaged by the Contract, including replacements of any computers supplied by the Contractor.

1.10.2 The Contractor's Documents and other design documents made by (or on behalf of) the Contractor shall not, without the Contractor's consent, be used, copied or communicated to a third party by (or on behalf of) the Procuring Entity for purposes other than those permitted under this Sub-Clause.

1.11 Contractor's Use of Procuring Entity's Documents

As between the Parties, the Procuring Entity shall retain the copyright and other intellectual property rights in the Specification, the Drawings and other documents made by (or on behalf of) the Procuring Entity. The Contractor may, at his cost, copy, use, and obtain communication of these documents for the purposes of the Contract. They shall not, without the Procuring Entity's consent, be copied, used or communicated to a third party by the Contractor, except as necessary for the purposes of the Contract.

1.12 Confidential Details

The Contractor's and the Procuring Entity's Personnel shall disclose all such confidential and other information as may be reasonably required in order to verify compliance with the Contract and allow its proper implementation.

1.13 Compliance with Laws

The Contractor shall, in performing the Contract, comply with applicable Laws. Unless otherwise stated in the Particular Conditions:

a) The Procuring Entity shall have obtained (or shall obtain) the planning, zoning, building permit or similar permission for the Permanent Works, and any other permissions described in the Specification as having been (or to be) obtained by the Procuring Entity; and the Procuring Entity shall indemnify and hold the Contractor harmless against and from the consequences of any failure to do so; and

b) the Contractor shall give all notices, pay all taxes, duties and fees, and obtain all permits, licenses and approvals, as required by the Laws in relation to the execution and completion of the Works and the remedying of any defects; and the Contractor shall indemnify and hold the Procuring Entity harmless against and from the consequences of any failure to do so, unless the Contractor is impeded to accomplish these actions and shows evidence of its diligence.

1.14 Joint and Several Liability

If the Contractor constitutes (under applicable Laws) a joint venture, consortium or other unincorporated grouping of two or more persons:

a) These persons shall be deemed to be jointly and severally liable to the Procuring Entity for the performance of the Contract;

b) these persons shall notify the Procuring Entity of their leader who shall have authority to bind the Contractor and each of these persons; and

c) the Contractor shall not alter its composition or legal status without the prior consent of the Procuring Entity.

1.15 Inspections and Audit by the Procuring Entity

Pursuant to paragraph 2.2 e. of Appendix B to the General Conditions, the Contractor shall permit and shall cause its subcontractors and sub-consultants to permit, the Procuring Entity and/or persons appointed by the Procuring Entity to inspect the Site and/or the accounts and records relating to the procurement process, selection and/or contract execution, and to have such accounts and records audited by auditors appointed by the Procuring Entity if requested by the Procuring Entity. The Contractor's and its Subcontractors' and sub-consultants' attention is drawn to Sub-Clause15.6 (Fraud and Corruption) which provides, interalia, that acts intended to materially impede the exercise of the Procuring Entity's inspection and audit rights constitute a prohibited practice subject to contract termination (as well as to a determination of ineligibility pursuant to the Procuring Entity's prevailing sanctions procedures).

2. THE PROCURING ENTITY

2.1 Right of Access to the Site

2.1.1 The Procuring Entity shall give the Contractor right of access to, and possession of, all parts of the Site within the time (or times) stated in the **SCC**. The right and possession may not be exclusive to the Contractor. If, under the Contract, the Procuring Entity is required to give (to the Contractor) possession of any foundation, structure, plant or means of access, the Procuring Entity shall do so in the time and manner stated in the Specification. However, the Procuring Entity may withhold any such right or possession until the Performance Security has been received.

2.1.2 If no such time is stated in the **SCC**, the Procuring Entity shall give the Contractor right of access to, and possession of, the Site within such times as required to enable the Contractor to proceed without disruption in accordance with the programme submitted under Sub-Clause 8.3 [Programme].

2.1.3 If the Contractor suffers delay and/or incurs Cost as aresult of a failure by the Procuring Entity to give any such right or possession within such time, the Contractor shall give notice to the Engineer and shall been titled subject toSub-Clause20.1 [Contractor's Claims] to:

a) an extension of time for any such delay, if completion is or will be delayed, under Sub-Clause 8.4 [Extension of Time for Completion], and

b) payment of any such Cost-plus profit, which shall be included in the Contract Price.

2.1.4 After receiving this notice, the Engineer shall proceed in accordance with Sub-Clause3.5 [Determinations]to agree or determine these matters.

2.1.5 However, if and to the extent that the Procuring Entity's failure was caused by any error or delay by the Contractor, including an error in, or delay in the submission of, any of the Contractor's Documents, the Contractor shall not be entitled to such extension of time, Cost or profit.

2.2 Permits, Licenses or Approvals

The Procuring Entity shall provide, at the request of the Contractor, such reasonable assistance as to allow the Contractor to obtain properly:

a) Copies of the Laws of the Country which are relevant to the Contract but are not readily available, and

b) Any permits, licenses or approvals required by the Laws of the Country:

i) Which the Contractor is required to obtain under Sub-Clause 1.13 [Compliance with Laws],
ii) For the delivery of Goods, including clearance through customs, and
iii) For the export of Contractor's Equipment when it is removed from the Site.

23 Procuring Entity's Personnel

The Procuring Entity shall be responsible for ensuring that the Procuring Entity's Personnel and the Procuring Entity's other contractors on the Site:

a) co-operate with the Contractor's efforts under Sub-Clause 4.6 [Co-operation], and

b) take actions similar to those which the Contractor is required to take under sub-paragraphs (a), (b) and (c) of Sub-Clause 4.8 [Safety Procedures] and under Sub-Clause 4.18 [Protection of the Environment].

24 Procuring Entity's Financial Arrangement

24.1 The Procuring Entity shall submit, before the Commencement Date and there after within 30 days after receiving any request from the Contractor, reasonable evidence that financial arrangements have been made and are being maintained which will enable the Procuring Entity to pay the Contract Price punctually (as estimated at that time) in accordance with Clause 14 [Contract Price and Payment]. Before the Procuring Entity makes any material change to his financial arrangements, the Procuring Entity shall give notice to the Contractor with detailed particulars.

24.2 In addition, if the Procuring Entity has notified to the Contractor that the Procuring Entity has suspended disbursements under its loan, which finances in whole or in part the execution of the Works, the Procuring Entity shall give notice of such suspension to the Contractor with detailed particulars, including the date of such notification, with a copy to the 2.4.3 Engineer, within 7 days of the Procuring Entity having received the suspension notification from the Procuring Entity. If alternative funds will be available in appropriate currencies to the Procuring Entity to continue making payments to the Contractor beyond a date 60 day after the date of Procuring Entity notification of the suspension, the Procuring Entity shall provide reasonable evidence in his notice of the extent to which such funds will be available.

25 Procuring Entity's Claims

25.1 If the Procuring Entity considers itself to be entitled to any payment under any Clause of these Conditions or otherwise in connection with the Contract, and/or to any extension of the Defects Notification Period, the Procuring Entity or the shall give notice and particulars to the Contractor. However, notice is not required for payments due under Sub-Clause 4.19 [Electricity, Water and Gas], under Sub-Clause 4.20 [Procuring Entity's Equipment and Free-Issue Materials], or for other services requested by the Contractor.

25.2 The notice shall be given as soon as practicable and no longer than 30 days after the Procuring Entity became aware, or should have become aware, of the event or circumstances giving rise to the claim. A notice relating to any extension of the Defects Notification Period shall be given before the expiry of such period.

25.3 The particulars shall specify the Clause or other basis of the claim and shall include substantiation of the amount and/or extension to which the Procuring Entity considers itself to be entitled in connection with the Contract. The Engineer shall then proceed in accordance with Sub-Clause 3.5 [Determinations] to agree or determine (i) the amount (if any) which the Procuring Entity is entitled to be paid by the Contractor, and/or(ii) the extension (if any) of the Defects Notification Period in accordance with Sub-Clause 11.3 [Extension of Defects Notification Period].

3. THE ENGINEER

31 Engineer's Duties and Authority

31.1 The Procuring Entity shall appoint the Engineer who shall carry out the duties assigned to him in the Contract. The Engineer's staff shall include suitably qualified engineers and other professionals who are competent to carry out these duties.

The Engineer shall have no authority to amend the Contract.
The Engineer may exercise the authority attributable to the Engineer as specified in or necessarily to be implied from the Contract. If the Engineer is required to obtain the approval of the Procuring Entity before exercising a

specified authority, the requirements shall be as stated in the Particular Conditions. The Procuring Entity shall promptly inform the Contractor of any change to the authority attributed to the Engineer.

3.1.2 However, whenever the Engineer exercises a specified authority for which the Procuring Entity's approval is required, then (for the purposes of the Contract) the Procuring Entity shall be deemed to have given approval. Except as otherwise stated in these Conditions:

a) Whenever carrying out duties or exercising authority, specified in or implied by the Contract, the Engineer shall be deemed to act for the Procuring Entity; the Engineer has no authority to relieve either Party of any duties, obligations or

b) any approval, check, certificate, consent, examination, inspection, instruction, notice, proposal, request, test, or similar act by the Engineer (including absence of disapproval) shall not relieve the Contractor from any responsibility he has under the Contract, including responsibility for errors, omissions, discrepancies and non-compliances; and

c) any act by the Engineer in response to a Contractor's request except as otherwise expressly specified shall be notified in writing to the Contractor within 14 days of receipt.

3.1.2 The following provisions shall apply; The Engineer shall obtain the specific approval of the Procuring Entity before taking action under the-following Sub-Clauses of these Conditions:

a) Sub-Clause 4.12: agreeing or determining an extension of time and/or additional cost.

b) Sub-Clause13.1: instructing a Variation, except;

i) In an emergency situation as determined by the Engineer, or

ii) If such a Variation would increase the Accepted Contract Amount by less than the percentage specified in the **SCC**.

c) Sub-Clause13.3: Approving a proposal for Variation submitted by the Contractor in accordance with Sub Clause13.1or13.2.

d) Sub-Clause13.4: Specifying the amount payable in each of the applicable currencies.

3.1.3 Notwithstanding the obligation, as set out above, to obtain approval, if, in the opinion of the Engineer, an emergency occurs affecting the safety of life or of the Works or of adjoining property, he may, without relieving the Contractor of any of his duties and responsibility under the Contract, instruct the Contract or to execute all such work or to do all such things as may, in the opinion of the Engineer, be necessary to abate or reduce the risk. The Contractor shall forthwith comply, despite the absence of approval of the Procuring Entity, with any such instruction of the Engineer. The Engineer shall determine an addition to the Contract Price, in respect of such instruction, in accordance with Clause 13 and shall notify the Contractor accordingly, with a copy to the Procuring Entity.

3.2 Delegation by the Engineer

3.2.1 The Engineer may from time to time assign duties and delegate authority to assistants, and may also revoke such assignment or delegation. These assistants may include a resident engineer, and/or independent inspectors appointed to inspect and/or test items of Plant and/or Materials. The assignment, delegation or revocation shall be in writing and shall not take effect until copies have been received by both Parties. However, unless otherwise agreed by both Parties, the Engineer shall not delegate the authority to determine any matter in accordance with Sub-Clause3.5 [Determinations].

3.2.2 Each assistant, to whom duties have been assigned or authority has been delegated, shall only be authorized to issue instructions to the Contractor to the extent defined by the delegation. Any approval, check, certificate, consent, examination, inspection, instruction, notice, proposal, request, test, or similar act by an assistant, in accordance with the delegation, shall have the same effect as though the act had been an act of the Engineer. However:

a) Any failure to disapprove any work, Plant or Materials shall not constitute approval, and shall therefore not prejudice the right of the Engineer to reject the work, Plant or Materials;

b) if the Contractor questions any determination or instruction of an assistant, the Contractor may refer the matter to the Engineer, who shall promptly confirm, reverse or vary the determination or instruction.

3.3 Instructions of the Engineer

3.3.1 The Engineer may issue to the Contractor (at any time) instructions and additional or modified Drawings which may be necessary for the execution of the Works and the remedying of any defects, all in accordance with the

Contract. The Contractor shall only take instructions from the Engineer, or from an assistant to whom the appropriate authority has been delegated under this Clause. If an instruction constitutes a Variation, Clause 13 [Variations and Adjustments] shall apply.

3.3.2 The Contractor shall comply with the instructions given by the Engineer or delegated assistant, on anymatter related to the Contract. Whenever practicable, their instructions shall be given in writing. If the Engineer or a delegated assistant:

a) Gives an oral instruction,
b) receives a written confirmation of the instruction, from (or on behalf of) theContractor, within two working days after giving the instruction, and
c) does not reply by issuing a written rejection and/or instruction within two working days after receiving the confirmation, then the confirmation shall constitute the written instruction of the Engineeror delegated assistant (as the case may be).

3.4 Replacement of the Engineer

3.4.1 If the Procuring Entity intends to replace the Engineer, the Procuring Entity shall, not less than 21 days before the intended date of replacement, give notice to the Contractor of the name, address and relevant experience of the intended replacement Engineer. If the Contractor considers the intended replacement Engineer to be unsuitable, he has the right to raise objection against him by notice to the Procuring Entity, with supporting particulars, and the Procuring Entity shall give full and fair consideration to this objection.

3.5 Determinations

3.5.1 Whenever these Conditions provide that the Engineer shall proceed in accordance with this Sub-Clause 3.5 to agree or determine any matter, the Engineer shall consult with each Party in an endeavor to reach agreement. If agreement is not achieved, the Engineer shall make a fair determination in accordance with the Contract, taking due regard of all relevant circumstances.

3.5.2 The Engineer shall give notice to both Parties of each agreement or determination, with supporting particulars, within 30 days from the receipt of the corresponding claim or request except when otherwise specified. Each Party shall give effect to each agreement or determination unless and until revised under Clause 20 [Claims, Disputes and Arbitration].

4. THE CONTRACTOR

4.1 Contractor's General Obligations

4.1.1 The Contractor shall design (to the extent specified in the Contract), execute and complete the Works in accordance with the Contract and with the Engineer's instructions, and shall remedy any defects in the Works.

4.1.2 The Contractor shall provide the Plant and Contractor's Documents specified in the Contract, and all Contractor's Personnel, Goods, consumables and other things and services, whether of a temporary or permanent nature, required in and for this design, execution, completion and remedying of defects.

4.1.3 All equipment, material, and services to be incorporated in or required for the Works shall have their origin in any eligible source country as defined by the Procuring Entity.

4.1.4 The Contractor shall be responsible for the adequacy, stability and safety of all Site operations and of all methods of construction. Except to the extent specified in the Contract, the Contractor (i) shall be responsible for all Contractor's Documents, Temporary Works, and such design of each item of Plant and Materials as is required for the item to be in accordance with the Contract, and (ii) shall not otherwise be responsible for the design or specification of the Permanent Works.

4.1.5 The Contractor shall, whenever required by the Engineer, submit details of the arrangements and methods which the Contractor proposes to adopt for the execution of the Works. No significant alteration to these arrangements and methods shall be made without this having previously been notified to the Engineer.

4.1.6 The Contractor shall not commence any Works, including mobilization and/or pre-construction activities (e.g. limited clearance for haul roads, site accesses and work site establishment, geotechnical investigations or investigations to select ancillary features such as quarries and borrowpits), unless the Engineer is satisfied that appropriate measures are in place to address environmental, social, health and safety risks and impacts.

4.1.7 If the Contract specifies that the Contract or shall design any part of the Permanent Works, then unless otherwise stated in the Particular Conditions:

a) The Contractor shall submit to the Engineer the Contractor's Documents for this part in accordance with the procedures specified in the Contract;

b) These Contractor's Documents shall be in accordance with the Specification and Drawings, shall be written in the language for communications defined in Sub-Clause 1.4 [Law and Language], and shall include additional information required by the Engineer to add to the Drawings for co-ordination of each Party's designs;

c) The Contractor shall be responsible for this part and it shall, when the Works are completed, be fit for such purposes for which the part is intended as are specified in the Contract; and

d) Prior to the commencement of the Tests on Completion, the Contractor shall submit to the Engineer the "as- built" documents and, if applicable, operation and maintenance manuals in accordance with the Specification and insufficient detail for the Procuring Entity to operate, maintain, dismantle, reassemble, adjust and repair this part of the Works. Such part shall not be considered to be completed for thev purposes of taking-over under Sub-Clause 10.1 [Taking Over of the Works and Sections] until these documents and manuals have been submitted to the Engineer.

4.2 Performance Security

4.2.1 Performance security shall not be required for contracts estimated to cost less than Kenya shillings five million shillings.

4.2.2 The Contractor shall obtain (at his cost) a Performance Security for proper performance, in the amount stated in the **SCC** and denominated in the currency (ies) of the Contractor in a freely convertible currency acceptable to the Procuring Entity. If an amount is not stated in the **SCC,** this Sub-Clause shall not apply.

4.2.3 The Contractor shall deliver the Performance Security to the Procuring Entity within 14 days after receiving the Letter of Acceptance and shall send a copy to the Engineer. The Performance Security shall be issued by a reputable Procuring Entity or financial institution selected by the Contract or and shall be in the form annexed to the Particular Conditions, as stipulated by the Procuring Entity in the **SCC**, or in another form approved by the Procuring Entity.

4.2.4 The Contractor shall ensure that the Performance Security is valid and enforceable until the Contractor has executed and completed the Works and remedied any defects. If the terms of the Performance Security specify its expiry date, and the Contractor has not become entitled to receive the Performance Certificate by the date 30 days prior to the expiry date, the Contractor shall extend the validity of the Performance Security until the Works have been completed and any defects have been remedied.

4.2.5 The Procuring Entity shall not make a claim under the Performance Security, except for amounts to which the Procuring Entity is entitled under the Contract.

The Procuring Entity shall indemnify and hold the Contractor harmless against and from all damages, losses and expenses (including legal fees and expenses) resulting from a claim under the Performance Security to the extent to which the Procuring Entity was not entitled to make the claim.

4.2.6 The Procuring Entity shall return the Performance Security to the Contractor within 21 days after receiving a copy of the Performance Certificate.

4.2.7 Without limitation to the provisions of the rest of this Sub-Clause, whenever the Engineer determines an addition or are duction to the Contract Price as a result of a change in cost and/or legislation, or as a result of a Variation, amounting to more than 25 percent of the portion of the Contract Price payable in a specific currency, the Contractor shall at the Engineer's request promptly increase, or may decrease, as the case may be, the value of the Performance Security in that currency by an equal percentage.

4.3 Contractor's Representative

4.3.1 The Contractor shall appoint the Contractor's Representative and shall give him all authority necessary to act on the Contractor's behalf under the Contract.

Unless the Contractor's Representative is named in the Contract, the Contractor shall, prior to the Commencement Date, submit to the Engineer for consent the name and particulars of the person the Contractor proposes to appoint as Contractor's Representative. If consent is withheld or subsequently revoked interms of Sub-Clause 6.9 [Contractor's Personnel], or if the appointed person fails to act as Contractor's Representative, the Contractor shall similarly submit the name and particulars of another suitable person for such appointment.

The Contractor shall not, without the prior consent of the Engineer, revoke the appointment of the Contractor's Representative or appoint a replacement.

4.3.2 The whole time of the Contractor's Representative shall be given to directing the Contractor's performance of the Contract. If the Contractor's Representative is to be temporarily absent from the Site during the execution of the Works, a suitable replacement person shall be appointed, subject to the Engineer's prior consent, and the Engineer shall be notified accordingly.

4.3.3 The Contractor's Representative shall, on behalf of the Contractor, receive instructions under Sub-Clause 3.3 [Instructions of the Engineer].

The Contractor's Representative may delegate any powers, functions and authority to any competent person, and may at anytime revoke the delegation. Any delegation or revocation shall not take effect until the Engineer has received prior notice signed by the Contractor's Representative, naming the person and specifying the powers, functions and authority being delegated or revoked.

4.3.4 The Contractor's Representative shall be fluent in the language for communications defined in Sub-Clause1.4 [Law and Language]. If the Contractor's Representative's delegates are not fluent in the said language, the Contractor shall make competent interpreters available during all working hours in a number deemed sufficient by the Engineer.

4.4 Subcontractors

4.4.1 The Contractor shall not subcontract the whole of the Works.

The Contractor shall be responsible for the acts or defaults of any Subcontractor, his agents or employees, as if they were the acts or defaults of the Contractor. Unless otherwise stated in the Particular Conditions:

a) The Contractor shall not be required to obtain consent to suppliers solely of Materials, or to a subcontract for which the Subcontractor is named in the Contract;

b) The prior consent of the Engineer shall be obtained to other proposed Sub contractors;

c) the Contractor shall give the Procuring entity not less than 14 days' notice of the intended date of the commencement of each Subcontractor's work, and of the commencement of such work on the Site; and

d) each subcontract shall include provisions which would entitle the Procuring Entity to require the subcontract to be assigned to the Procuring Entity under Sub-Clause 4.5 [Assignment of Benefit of Subcontract] (if or when applicable) or in the event of termination under Sub-Clause15.2 [Termination by Procuring Entity].

4.4.2 The Contractor shall ensure that the requirements imposed on the Contractorby Sub-Clause 1.12 [Confidential Details] apply equally to each Subcontractor.

4.4.3 Where practicable, the Contractor shall give fair and reasonable opportunity for contractors from the Country to be appointed as Subcontractors.

4.5 Assignment of Benefit of Subcontract

If a Subcontractor's obligations extend beyond the expiry date of the relevant Defects Notification Period and the Engineer, prior to this date, instructs the Contractor to assign the benefit of such obligations to the Procuring Entity, then the Contractor shall do so. Unless otherwise stated in the assignment, the Contractor shall have no liability to the Procuring Entity for the work carried out by the Subcontractor after the assignment takes effect.

4.6 Co-operation

4.6.1 The Contractor shall, as specified in the Contract or as instructed by the Engineer, allow appropriate opportunities for carrying out work to:
a) The Procuring Entity's Personnel,
b) Any other contractors employed by the Procuring Entity, and
c) The personnel of any legally constituted public authorities, who may be employed in the execution on or near the Site of any work not included in the Contract.

4.6.2 Any such instruction shall constitute a Variation if and to the extent that it causes the Contractor to suffer delays and/or to incur Unforeseeable Cost. Services for these personnel and other contractors may include the use of Contractor's Equipment, Temporary Works or access arrangements which are the responsibility of the Contractor.

If, under the Contract, the Procuring Entity is required to give to the Contractor possession of any foundation, structure, plant or means of access in accordance with Contractor's Documents, the Contractor shall submit such documents to the Engineer in the time and manner stated in the Specification.

4.7 Setting Out

4.7.1 The Contractor shall set out the Works in relation to original points, lines and levels of reference specified in the Contractor notified by the Engineer. The Contractor shall be responsible for the correct positioning of all parts of the Works, and shall rectify any error in the positions, levels, dimensions or alignment of the Works.

The Procuring Entity shall be responsible for any errors in these specified or notified items of reference, but the Contractor shall use reasonable efforts to verify their accuracy before they are used.

4.7.2 If the Contractor suffers delay and/or incurs Cost from executing work which was necessitated by an error in these items of reference, and an experienced contractor could not reasonably have discovered such error and avoided this delay and/or Cost, the Contractor shall give notice to the Engineer and shall be entitled subject to Sub-Clause 20.1 [Contractor's Claims] to:
a) an extension of time for any such delay, if completion is or will be delayed, under Sub-Clause 8.4 [Extension of Time for Completion], and
b) payment of any such Cost-plus profit, which shall be included in the Contract Price.

4.7.3 After receiving this notice, the Engineer shall proceed in accordance with Sub-Clause 3.5 [Determinations] to agree or determine (i) whether and (if so) to what extent the error could not reasonably have been discovered, and (ii) the matters described in sub-paragraphs (a) and (b) above related to thise.

4.8 Safety Procedures

The Contractor shall:
a) Comply with all applicable safety regulations,
b) Take care for the safety of all persons entitled to be on the Site,
c) Use reasonable efforts to keep the Site and Works clear of unnecessary obstructions as to avoid danger to these persons,
d) provide fencing, lighting, guarding and watching of the Works until completion and taking over under Clause10 [Procuring Entity's Taking Over], and
e) provide any Temporary Works (including roadways, footways, guards and fences) which may be necessary, because of the execution of the Works, for the use and protection of the public and of owners and occupiers of adjacent land.

4.9 Quality Assurance

The Contractor shall institute a quality assurance system to demonstrate compliance with the requirementsof the Contract. The system shall be in accordance with the details stated in the Contract. The Engineer shall be entitled to audit any aspect of the system.

Details of all procedures and compliance documents shall be submitted to the Engineer for information before each design and execution stage is commenced. When any document of a technical nature is issued to the Engineer, evidence of the prior approval by the Contractor itself shall be apparent on the document

itself. Compliance with the quality assurance system shall not relieve the Contractor of any of his duties, obligations or responsibilities under the Contract.

4.10 Site Data

The Procuring Entity shall have made available to the Contractor for his information, prior to the Base Date, all relevant data in the Procuring Entity's possession on sub-surface and hydrological conditions at the Site, including environmental aspects. The Procuring Entity shall similarly make available to the Contract or all such data which come into the Procuring Entity's possession after the Base Date. The Contractor shall be responsible for interpreting all such data.

To the extent which was practicable (taking account of cost and time), the Contractor shall be deemed to have obtained all necessary information as to risks, contingencies and other circumstances which may influence or affect the Tender or Works. To the same extent, the Contractor shall be deemed to have inspected and examined the Site, its surroundings, the above data and other available information, and to have been satisfied before submitting the Tender as to all relevant matters, including (without limitation):

a) The form and nature of the Site, including sub-surface conditions,
b) The hydrological and climatic conditions,
c) The extent and nature of the work and Goods necessary for the execution and completion of the Works and the remedying of any defects,
d) The Laws, procedures and labor practices of the Country, and
e) The Contractor's requirements for access, accommodation, facilities, personnel, power, transport, water and other services.

4.11 Sufficiency of the Accepted Contract Amount

4.11.1 The Contractor shall be deemed to:

a) Have satisfied itself as to the correctness and sufficiency of the Accepted Contract Amount, and
b) Have based the Accepted Contract Amount on the data, interpretations, necessary information, inspections, examinations and satisfaction as to all relevant matters referred to in Sub-Clause 4.10 [Site Data].

4.11.2 Unless otherwise stated in the Contract, the Accepted Contract Amount covers all the Contractor's obligations under the Contract (including those under Provisional Sums, if any) and all things necessary for the proper execution and completion of the Works and the remedying of any defects.

4.12 Unforeseeable Physical Conditions

4.12.1 In this Sub-Clause, "physical conditions" means natural physical conditions and man-made and other physical obstructions and pollutants, which the Contractor encounters at the Site when executing the Works, including sub-surface and hydrological conditions but excluding climatic conditions.

4.12.2 If the Contractor encounters adverse physical conditions which he considers to have been Unforeseeable, the Contractorshallgivenoticetothe Engineerassoonaspracticable.

This notice shall describe the physical conditions, so that they can be inspected by the Engineer, and shall set out the reasons why the Contractor considers them to be Unforeseeable. The Contractor shall continue executing the Works, using such proper and reasonable measures as are appropriate for the physical conditions, and shall comply with any instructions which the Engineer may give. If an instruction constitutes a Variation, Clause 13 [Variations and Adjustments] shall apply.

4.12.3 If and to the extent that the Contractor encounters physical conditions which are Unforeseeable, gives such a notice, and suffers delay and/or incurs Cost due to these conditions, the Contractor shall be entitled subject to notice under Sub-Clause 20.1 [Contractor's Claims] to:

a) An extension of time for any such delay, if completion is or will be delayed, under Sub-Clause 8.4 [Extension of Time for Completion], and
b) Payment of any such Cost, which shall be included in the Contract Price.

4.12.4 Upon receiving such notice and inspecting and/or investigating these physical conditions, the Engineer shall proceed in accordance with Sub-Clause 3.5 [Determinations] to agree or determine (i) whether and (if so) to what extent these physical conditions were Unforeseeable, and (ii) the matters described in sub-paragraphs (a) and (b) above related to this extent.

4.12.5 However, before additional Cost is finally agreed or determined under sub-paragraph (ii), the Engineer may also review whether other physical conditions in similar parts of the Works (if any) were more favorable than could reasonably have been foreseen when the Contractor submitted the Tender. If and to the extent that thesemore favorable conditions were encountered, the Engineer may proceed in accordance with Sub-Clause 3.5 [Determinations] to agree or determine the reductions in Cost which were due to these conditions, which may be included (as deductions) in the Contract Price and Payment Certificates. However, the net effect of all adjustments under sub-paragraph (b) and all these reductions, for all the physical conditions encountered in similar parts of the Works, shall not result in any reduction in the Contract Price.

4.12.6 The Engineer shall take account of any evidence of the physical conditions foreseen by the Contractor when submitting the Tender, which shall be made available by the Contractor, but shall not be bound by the Contractor's interpretation of any such evidence.

4.13 Rights of Way and Facilities

Unless otherwise specified in the Contract the Procuring Entity shall provide effective access to and possession of the Site including special and/or temporary rights-of-way which are necessary for the Works. The Contractor shall obtain, at his risk and cost, any additional rights of way or facilities outside the Site which he may require for the purposes of the Works.

4.14 Avoidance of Interference

The Contractor shall not interfere unnecessarily or improperly with:

a) The convenience of the public, or
b) The access to and use and occupation of all roads and footpaths, irrespective of whether they are public or in the possession of the Procuring Entity or of others.

The Contractor shall indemnify and hold the Procuring Entity harmless against and from all damages, losses and expenses (including legal fees and expenses) resulting from any such unnecessary or improper interference.

4.15 Access Route

TheContractorshallbedeemedtohavebeensatisfiedastothesuitabilityandavailabilityofaccessroutestothe SiteatBaseDate.TheContractorshallusereasonableeffortstopreventanyroadorbridgefrombeingdamaged by the Contractor's traffic or by the Contractor's Personnel. These efforts shall include the proper use of appropriatevehiclesandroutes.

Except as otherwise stated in these Conditions:

a) The Contractor shall (as between the Parties) be responsible for any maintenance which may be required for his use of access routes;
b) the Contractor shall provide all necessary signs or directions along access routes, and shall obtain any permission which may be required from the relevant authorities for his use of routes, signs and directions;
c) the Procuring Entity shall not be responsible for any claims which may arise from the use or otherwise of any access route;
d) the Procuring Entity does not guarantee the suitability or availability of particular access routes; and
e) Costs due to non-suitability or non-availability, for the use required by the Contractor, of access routes shall be borne by the Contractor.

4.16 Transport of Goods

Unless otherwise stated in the Particular Conditions:

a) The Contractor shall give the Engineer not less than 21 days' notice of the date on which any Plant or a major item of other Goods will be delivered to the Site;
b) the Contractor shall be responsible for packing, loading, transporting, receiving, unloading, storing and protecting all Goods and other things required for the Works; and
c) the Contractor shall indemnify and hold the Procuring Entity harmless against and from all damages, losses and expenses (including legal fees and expenses) resulting from the transport of Goods, and shall negotiate and pay all claims arising from their transport.

4.17 Contractor's Equipment

The Contractor shall be responsible for all Contractor's Equipment. When brought onto the Site, Contractor's Equipment shall be deemed to be exclusively intended for the execution of the Works. The Contractor shall not remove from the Site any major items of Contractor's Equipment without the consent of the Engineer. However, consent shall not be required for vehicles transporting Goods or Contractor's Personnel off Site.

4.18 Protection of the Environment

The Contractor shall take all reasonable steps to protect the environment (both on and off the Site) and to limit damage and nuisance to people and property resulting from pollution, noise and other results of his operations.

The Contractor shall ensure that emissions, surfaced is charges and effluent from the Contractor's activities shall not exceed the values stated in the Specification or prescribed by applicable Laws.

4.19 Electricity, Water and Gas

4.19.1 The Contractor shall, except as stated below, be responsible for the provision of all power, water and other services he may require for his construction activities and to the extent defined in the Specifications, for the tests.

The Contractor shall be entitled to use for the purposes of the Works such supplies of electricity, water, gas and other services as may be available on the Site and of which details and prices are given in the Specification. The Contractor shall, at his risk and cost, provide any apparatus necessary for his use of these services and for measuring the quantities consumed.

4.19.2 The quantities consumed and the amounts due (at these prices) for such services shall be agreed or determined by the Engineer in accordance with Sub-Clause 2.5 [Procuring Entity's Claims] and Sub-Clause 3.5 [Determinations]. The Contractor shall pay these amounts to the Procuring Entity.

4.20 Procuring Entity's Equipment and Free-Issue Materials

4.20.1 The Procuring Entity shall make the Procuring Entity's Equipment (if any) available for the use of the Contractor in the execution of the Works in accordance with the details, arrangements and prices stated in the Specification. Unless otherwise stated in the Specification:

a) The Procuring Entity shall be responsible for the Procuring Entity's Equipment, except that

b) the Contractor shall be responsible for each item of Procuring Entity's Equipment whilst any of the Contractor's Personnel is operating it, driving it, directing it or in possession or control of it.

4.20.2 The appropriate quantities and the amounts due (at such stated prices) for the use of Procuring Entity's Equipment shall be agreed or determined by the Engineer in accordance with Sub-Clause 2.5 [Procuring Entity's Claims] and Sub-Clause 3.5 [Determinations]. The Contractor shall pay these amounts to the Procuring Entity.

The Procuring Entity shall supply, free of charge, the “free-issue materials” (if any) in accordance with the details stated in the Specification. The Procuring Entity shall, at his risk and cost, provide these materialsc at the time and place specified in the Contract. The Contractor shall then visually inspect them and shall promptly give notice to the Engineer of any shortage, defect or default in these materials. Unless otherwise agreed by both Parties, the Procuring Entity shall immediately rectify the notified shortage, defect or default.

4.20.3 After this visual inspection, the free-issue materials shall come under the care, custody and control of the Contractor.The Contractor's obligations of inspection, care, custody and control shall not relieve the Procuring Entity of liability for any shortage, defect or default not apparent froma visual inspection.

4.21 Progress Reports

4.21.1 Unless otherwise stated in the Particular Conditions, monthly progress reports shall be prepared by the Contractor and submitted to the Engineer in six copies. The first report shall cover the period upto the end of the first calendar month following the Commencement Date. Reports shall be submitted monthly thereafter, each within 7 days after the last day of the period to which it relates.

4.21.2 Reporting shall continue until the Contractor has completed all work which is known to be outstanding at the completion date stated in the Taking-Over Certificate for the Works.

Each report shall include:

a) charts and detailed descriptions of progress, including each stage of design (if any), Contractor's Documents, procurement, manufacture, delivery to Site, construction, erection and testing; andincluding these stages for work by each nominated Subcontractor (as defined in Clause 5 [Nominated Subcontractors]),
b) photographs showing the status of manufacture and of progress on the Site;
c) for the manufacture of each main item of Plant and Materials, the name of the manufacturer, manufacture location, percentage progress, and the actual or expected dates of:
   i) commencement of manufacture,
   ii) Contractor's inspections,
   iii) tests, and
   iv) shipment and arrival at the Site;
d) the details described in Sub-Clause 6.10 [Records of Contractor's Personnel and Equipment];
e) copies of quality assurance documents, test results and certificates of Materials;
f) list of notices given under Sub-Clause 2.5 [Procuring Entity's Claims] and notices given under Sub-Clause 20.1 [Contractor's Claims];
g) safety statistics, including details of any hazardous incidents and activities relating to environmental aspects and public relations; and
h) comparisons of actual and planned progress, with details of any events or circumstances which may jeopardize the completion in accordance with the Contract, and the measures being (or to be) adopted to overcome delays.

4.21.3 The Contractor shall provide immediate notification to the Engineer of incidents in the following categories. Full details of such incidents shall be provided to the Engineer within the time frame agreed with the Engineer.

a) confirmed or likely violation of any law or international agreement;
b) any fatality or serious injury;
c) significant adverse effects or damage to private property (e.g. vehicle accident, damage from fly rock, working beyond the boundary);
d) major pollution of drinking water aquifer or damage or destruction of rare or endangered habitat (including protected areas) or species; or
e) any allegation of sexual harassment or sexual misbehavior, child abuse, defilement, or other violations involving children.

4.22 Security of the Site

Unless otherwise stated in the Particular Conditions:

a) The Contractor shall be responsible for keeping unauthorized persons off the Site, and
b) Authorized persons shall be limited to the Contractor's Personnel and the Procuring Entity's Personnel; and to any other personnel notified to the Contractor, by the Procuring Entity or the Engineer, as authorized personnel of the Procuring Entity's other contractors on the Site.

4.23 Contractor's Operations on Site

4.23.1 The Contractor shall confine his operations to the Site, and to any additional areas which may be obtained by the Contractor and agreed by the Engineer as additional working areas. The Contractor shall take all necessary precautions to keep Contractor's Equipment and Contractor's Personnel within the Site and these additional areas, and to keep them off adjacent land.

During the execution of the Works, the Contractor shall keep the Site free from all unnecessary obstruction and shall store or dispose of any Contractor's Equipment or surplus materials. The Contractor shall clear away and remove from the Site any wreckage, rubbish and Temporary Works which are no longer required.

4.23.2 Upon the issue of a Taking-Over Certificate, the Contractor shall clear away and remove, from that part of the Site and Works to which the Taking-Over Certificate refers, all Contractor's Equipment, surplus material, wreckage, rubbish and Temporary Works. The Contractor shall leave that part of the Site and the Works in a clean and safe condition. However, the Contractor may retain on Site, during the Defects Notification Period, such Goods as are required for the Contractor to fulfil obligations under the Contract.

4.24 Fossils

All fossils, coins, articles of value or antiquity, and structures and other remains or items of geological or archaeological interest found on the Site shall be placed under the care and authority of the Procuring Entity. The Contractor shall take reasonable precautions to prevent Contractor's Personnel or other persons from removing or damaging any of these findings.

The Contractor shall, upon discovery of any such finding, promptly give notice to the Engineer, who shall issue instructions for dealing with it. If the Contractor suffers delay and/or incurs Cost from complying with the instructions, the Contractor shall give a further notice to the Engineer and shall be entitled subject to Sub-Clause
20.1 [Contractor's Claims] to:

a) an extension of time for any such delay, if completion is or will be delayed, under Sub-Clause 8.4 [Extension of Time for Completion], and
b) payment of any such Cost, which shall be included in the Contract Price.

After receiving this further notice, the Engineer shall proceed in accordance with Sub-Clause 3.5 [Determinations] to agree or determine these matters.

5. NOMINATED SUB CONTRACTORS

5.1 Definition of "nominated Subcontractor

In the Contract, "nominated Subcontractor" means a Subcontractor:

a) Who is stated in the Contract as being a nominated Subcontractor, or
b) whom the Engineer, under Clause 13 [Variations and Adjustments], instructs the Contractor to employ as a Subcontractor subject to Sub-Clause 5.2 [Objection to Notification].

5.2 Objection to Nomination

The Contractor shall not be under any obligation to employ a nominated Subcontractor against whom the Contractor raises reasonable objection by notice to the Engineer as soon as practicable, with supporting particulars. An objection shall be deemed reasonable if it arises from (among other things) any of the following matters, unless the Procuring Entity agrees in writing to indemnify the Contractor against and from the consequences of the matter:

a) there are reasons to believe that the Subcontractor does not have sufficient competence, resources or financial strength;
b) the nominated Subcontract or does not accept to indemnify the Contractor against and from any negligence or misuse of Goods by the nominated Subcontractor, his agents and employees; or
c) the nominated Subcontractor does not accept to enter into a subcontract which specifies that, for the subcontracted work (including design, if any), the nominated Subcontract or shall:
    i) undertake to the Contractor such obligations and liabilities as will enable the Contractor to discharge his obligations and liabilities under the Contract;
    ii) indemnify the Contractor against and from all obligations and liabilities arising under or in connection with the Contract and from the consequences of any failure by the Subcontractor to perform these obligations or to fulfil these liabilities, and
    iii) be paid only if and when the Contractor has received from the Procuring Entity payments for sums due under the Subcontract referred to under Sub-Clause 5.3 [Payment to nominated Subcontractors].

5.3 Payments to nominated Sub-contractors

The Contractor shall pay to the nominated Subcontractor the amounts shown on the nominated Subcontractor's invoices approved by the Contractor which the Engineer certifies to be due in accordance with the subcontract. These amounts plus other charges shall be included in the Contract Price in accordance with sub-paragraph (b) of Sub-Clause 13.5 [Provisional Sums], except as stated in Sub-Clause 5.4 [Evidence of Payments].

5.4 Evidence of Payments

Before issuing a Payment Certificate which includes an amount payable to a nominated Subcontractor, the Engineer may request the Contractor to supply reasonable evidence that the nominated Subcontractor hasreceived all amounts due in accordance with previous Payment Certificates, less applicable deductions for retention or otherwise. Unless the Contractor:

a) Submits this reasonable evidence to the Engineer, or
b) i) satisfies the Engineer in writing that the Contractor is reasonably entitled to withhold or refuse to

pay these amounts, and

ii) submits to the Engineer reasonable evidence that the nominated Subcontractor has been notified of the Contractor's entitlement, then the Procuring Entity may (at his sole discretion) pay, direct to the nominated Subcontractor, partor all of such amounts previously certified (less applicable deductions) as are due to the nominated Subcontractor and for which the Contractor has failed to submit the evidence described in sub-paragraphs (a) or (b) above. The Contractor shall then repay, to the Procuring Entity, the amount which the nominated Subcontractor was directly paid by the Procuring Entity.

6. STAFF AND LABOR

6.1 Engagement of Staff and Labor

Except as otherwise stated in the Specification, the Contractor shall make arrangements for the engagement of all staff and labor, local or otherwise, and for their payment, feeding, transport, and, when appropriate, housing. The Contractor is encouraged, to the extent practicable and reasonable, to employ staff and labor with appropriate qualifications and experience from sources within the Country.

6.2 Rates of Wages and Conditions of Labor

6.2.1 The Contractor shall pay rates of wages, and observe conditions of labor, which are not lower than those established for the trade or industry where the work is carried out. If no established rates or conditions are applicable, the Contractor shall pay rates of wages and observe conditions which are not lower than the general level of wages and conditions observed locally by Procuring Entity's whose trade or industry is similar to that of the Contractor.

6.2.2 The Contractor shall inform the Contractor's Personnel about their liability to pay personal income taxes in Kenya in respect of such of their salaries, wages, allowances and any benefits as are subject to tax under the Laws of Kenya for the time being in force, and the Contractor shall perform such duties in regard to such deductions there of as may be imposed on him by such Laws.

6.3 Persons in the Service of Procuring Entity

The Contractor shall not recruit, or attempt to recruit, staff and labor from amongst the Procuring Entity's Personnel.

6.4 Labor Laws

The Contractor shall comply with all the relevant labor Laws applicable to the Contractor's Personnel, including Laws relating to their employment, health, safety, welfare, immigration and emigration, and shall allow them all their legal rights.

The Contractor shall require his employees to obey all applicable Laws, including those concerning safety at work.

6.5 Working Hours

No work shall be carried out on the Site on locally recognized days of rest, or outside the normal working hours stated in the **SCC**, unless:

a) Otherwise stated in the Contract,
b) The Engineer gives consent, or
c) The work is unavoidable, or necessary for the protection of life or property or for the safety of the Works, in which case the Contractor shall immediately advise the Engineer.

6.6 Facilities for Staff and Labor

Except as otherwise stated in the Specification, the Contractor shall provide and maintain all necessary accommodation and welfare facilities for the Contractor's Personnel. The Contractor shall also provide facilities for the Procuring Entity's Personnel as stated in the Specification.

The Contractor shall not permit any of the Contractor's Personnel to maintain any temporary or permanent living quarters within the structures forming part of the Permanent Works.

6.7 Health and Safety

6.7.1 The Contractor shall at all times take all reasonable precautions to maintain the health and safety of the Contractor's Personnel. In collaboration with local health authorities, the Contractor shall ensure thatmedical staff, first aid facilities, sick bay and ambulance service are available at all times at the Site and at any accommodation for Contractor's and Procuring Entity's Personnel, and that suitable arrangements are made for all necessary welfare and hygiene requirements and for the prevention of epidemics.

6.7.2 The Contractor shall appoint an accident prevention officer at the Site, responsible for maintaining safety and protection against accidents. This person shall be qualified for this responsibility and shall have the authority to issue instructions and take protective measures to prevent accidents. Throughout the execution of the Works, the Contractor shall provide whatever is required by this person to exercise this responsibility and authority.

6.7.3 The Contractor shall send, to the Engineer, details of any accident as soon as practicable after its occurrence. The Contractor shall maintain records and make reports concerning health, safety and welfare of persons, and damage to property, as the Engineer may reasonably require.

6.7.3 HIV-AIDS Prevention. The Contractor shall conduct an HIV-AIDS awareness programme via an approved service provider and shall undertake such other measures as are specified in this Contract to reduce the risk of the transfer of the HIV virus between and among the Contractor's Personnel and the local community, to promote early diagnosis and to assist affected individuals.

6.8 Contractor's Superintendence

6.8.1 Throughout the execution of the Works, and as long thereafter as is necessary to fulfil the Contractor's obligations, the Contractor shall provide all necessary superintendence to plan, arrange, direct, manage, inspect and test the work.

6.8.2 Superintendence shall be given by a sufficient number of persons having adequate knowledge of the language for communications (defined in Sub-Clause 1.4 [Law and Language]) and of the operations to be carried out (including the methods and techniques required, the hazards likely to be encountered and methods of preventing accidents), for the satisfactory and safe execution of the Works.

6.9 Contractor's Personnel

6.9.1 The Contractor's Personnel specified in the **SCC** shall be appropriately qualified, skilled and experienced in their respective trades or occupations. The Engineer may require the Contractor to remove (or cause to be removed) any person employed on the Site or Works, including the Contractor's Representative if applicable, who:

a) Persists in any misconduct or lack of care,
b) Carries out duties incompetently or negligently,
c) Fails to conform with any provisions of the Contract,
d) Persists in any conduct which is prejudicial to safety, health, or the protection of the environment, or
e) Based on reasonable evidence, is determined to have engaged in Fraud and Corruption during the execution of the Works.

6.9.2 If appropriate, the Contractor shall then appoint (or cause to be appointed) a suitable replacement person.

6.10 Records of Contractor's Personnel and Equipment

The Contractor shall submit, to the Engineer, details showing the number of each class of Contractor's Personnel and of each type of Contractor's Equipment on the Site. Details shall be submitted each calendar month, in a form approved by the Engineer, until the Contractor has completed all work which is known to be outstanding at the completion date stated in the Taking-Over Certificate for the Works.

6.11 Disorderly Conduct

The Contractor shall at all times take all reasonable precautions to prevent any unlawful, riotous or disorderly conduct by or amongst the Contractor's Personnel, and to preserve peace and protection of persons and property on and near the Site.

6.12 Foreign Personnel

6.12.1 The Contractor may bring in to the Country any foreign personnel who are necessary for the execution of the Works to the extent allowed by the applicable Laws. The Contractor shall ensure that these personnel are provided with the required residence visas and work permits. The Procuring Entity will, if requested by the Contractor, use his Lowest endeavors in a timely and expeditious manner to assist the Contract or in obtaining any local, state, national or government permission required for bringing in the Contractor's personnel.

6.12.2 The Contractor shall be responsible for the return of these personnel to the place where they were recruited or to their domicile. In the event of the death in the Country of any of these personnel or members of their families, the Contractor shall similarly be responsible for making the appropriate arrangements for their return or burial.

6.13 Supply of Foodstuffs

The Contractor shall arrange for the provision of a sufficient supply of suitable food as may be stated in the Specification at reasonable prices for the Contractor's Personnel for the purposes of or in connection with the Contract.

6.14 Supply of Water

The Contractor shall, having regard to local conditions, provide on the Site an adequate supply of drinking and other water for the use of the Contractor's Personnel.

6.15 Measures against Insect and Pest Nuisance

The Contractor shall at all times take the necessary precautions to protect the Contractor's Personnel employed on the Site from insect and pest nuisance, and to reduce the danger to their health. The Contractor shall comply with all the regulations of the local health authorities, including use of appropriate insecticide.

6.16 Alcoholic Liquor or Drugs

The Contractor shall not, otherwise than in accordance with the Laws of the Country, import, sell, give, barter or otherwise dispose of any alcoholic liquor or drugs, or permit or allow importation, sale, gift, barter or disposal thereof by Contractor's Personnel.

6.17 Arms and Ammunition

The Contractor shall not give, barter, or otherwise dispose of, to any person, any arms or ammunition of any kind, or allow Contractor's Personnel to do so.

6.18 Festivals and Religious Customs

The Contractor shall respect the Country's recognized festivals, days of rest and religious or other customs.

6.19 Funeral Arrangements

The Contractor shall be responsible, to the extent required by local regulations, for making any funeral arrangements for any of his local employees who may die while engaged upon the Works.

6.20 Prohibition of Forced or Compulsory Labor

The Contractor shall not employ forced labor, which consists of any work or service, not voluntarily performed, that is exacted from an individual under threat of force or penalty, and includes any kind of involuntary or compulsory labor, such as indentured labor, bonded labor or similar labor-contracting arrangements.

6.21 Prohibition of Harmful Child Labor

The Contractor shall not employ children in a manner that is economically exploitative, or is likely to be hazardous, or to interfere with, the child's education, or to be harmful to the child's health or physical, mental, spiritual, moral, or social development. Where the relevant labor laws of the Country have provisions for employment of minors, the Contract or shall follow those laws applicable to the Contractor. Children below the age of 18 years shall not be employed in dangerous work.

6.22 Employment Records of Workers

The Contractor shall keep complete and accurate records of the employment of labor at the Site. The records shall include the names, ages, genders, hours worked and wages paid to all workers. These records shall be summarized on a monthly basis and submitted to the Engineer. These records shall be included in the details to be submitted by the Contractor under Sub-Clause 6.10 [Records of Contractor's Personnel and Equipment].

6.23 Workers' Organizations

The Contractor shall comply with laws on workers' rights to form and to join workers' organizations without interference and to bargain collectively.

6.24 Non-Discrimination and Equal Opportunity

The Contractor shall not make employment decisions on the basis of personal characteristics unrelated to inherent job requirements. The Contractor shall base the employment relationship on the principle of equal opportunity and fair treatment and shall not discriminate with respect to aspects of the employment relationship, including recruitment and hiring, compensation (including wages and benefits), working conditions and terms of employment, access to training, promotion, termination of employment or retirement, and discipline.

7. Plant, Materials and Workmanship

7.1 Manner of Execution

The Contractor shall carry out the manufacture of Plant, the production and manufacture of Materials, and all other execution of the Works:

a) In the manner (if any) specified in the Contract,
b) In a proper workman like and careful manner, in accordance with recognized good practice, and
c) with properly equipped facilities and non-hazardous Materials, except as otherwise specified in the Contract.

7.2 Samples

The Contractor shall submit the following samples of Materials, and relevant information, to the Engineer for consent prior to using the Materials in or for the Works:

a) manufacturer's standard samples of Materials and samples specified in the Contract, all at the Contractor's cost, and
b) additional samples instructed by the Engineer as a Variation.

Each sample shall be labeled as to origin and intended use in the Works.

7.3 Inspection

7.3.1 The Procuring Entity's Personnel shall at all reasonable times:

a) Have full access to all parts of the Site and to all places from which natural Materials are being obtained, and
b) during production, manufacture and construction (at the Site and elsewhere), be entitled to examine, inspect, measure and test the materials and workmanship, and to check the progress of manufacture of Plant and production and manufacture of Materials.

7.3.2 The Contractor shall give the Procuring Entity's Personnel full opportunity to carry out these activities, including providing access, facilities, permissions and safety equipment. No such activity shall relieve the Contractor from any obligation or responsibility.

The Contractor shall give notice to the Engineer whenever any work is ready and before it is covered up, put out of sight, or packaged for storage or transport. The Engineer shall then either carry out the examination, inspection, measurement or testing without unreasonable delay, or promptly give notice to the Contractor that the Engineer does not require to do so. If the Contractor fails to give the notice, he shall, if and when required by the Engineer, uncover the work and thereafter reinstate and make good, all at the Contractor's cost.

7.4 Testing

7.4.1 This Sub-Clause shall apply to all tests specified in the Contract, other than the Tests after Completion (if any).

7.4.2 Except as otherwise specified in the Contract, the Contractor shall provide all apparatus, assistance, documents and other information, electricity, equipment, fuel, consumables, instruments, labor, materials, and suitably qualified and experienced staff, as are necessary to carry out the specified tests efficiently. The Contractor shall agree, with the Engineer, the time and place for the specified testing of any Plant, Materials and other parts of the Works.

The Engineer may, under Clause 13 [Variations and Adjustments], vary the location or details of specified tests, or instruct the Contractor to carry out additional tests. If these varied or additional tests show that the tested Plant, Materials or workmanship is not in accordance with the Contract, the cost of carrying out this Variation shall be borne by the Contractor, notwithstanding other provisions of the Contract.

7.4.3 The Engineer shall give the Contractor not less than 24 hours' notice of the Engineer's intention to attend the tests. If the Engineer does not attend at the time and place agreed, the Contractor may proceed with the tests, unless otherwise instructed by the Engineer, and the tests shall then be deemed to have been made in the Engineer'spresence.

If the Contractor suffers delay and/or incurs Cost from complying with these instructions or as a result of a delay for which the Procuring Entity is responsible, the Contractor shall give notice to the Engineer and shall be entitled subject to Sub-Clause 20.1 [Contractor's Claims] to:

a) An extension of time for any such delay, if completion is or will be delayed, under Sub-Clause 8.4 [Extension ofTime for Completion], and

b) Payment of any such Cost-plus profit, which shall be included in the Contract Price.

7.4.4 After receiving this notice, the Engineer shall proceed in accordance with Sub-Clause 3.5 [Determinations] to agree or determine these matters.

The Contractor shall promptly forward to the Engineer duly certified reports of the tests. When the specified tests have been passed, the Engineer shall endorse the Contractor's test certificate, or issue a certificate to him, to that effect. If the Engineer has not attended the tests, he shall be deemed to have accepted the readings as accurate.

7.5 Rejection

7.5.1 If, as a result of an examination, inspection, measurement or testing, any Plant, Materials or workmanship is found to be defective or otherwise not in accordance with the Contract, the Engineer may reject the Plant, Materials or workmanship by giving notice to the Contractor, with reasons. The Contractor shall then promptly make good the defect and ensure that the rejected item complies with the Contract.

7.5.2 If the Engineer requires this Plant, Materials or workmanship to be retested, the tests shall be repeated unde rthe same terms and conditions. If the rejection and retesting cause the Procuring Entity to incur additional costs, the Contractor shall subject to Sub-Clause 2.5 [Procuring Entity's Claims] pay these costs to the Procuring Entity.

7.6 Remedial Work

7.6.1 Notwithstanding any previous test or certification, the Engineer may instruct the Contractor to:

a) remove from the Site and replace any Plant or Materials which is not in accordance with the Contract,

b) remove and re-execute any other work which is not in accordance with the Contract, and

c) execute any work which is urgently required for the safety of the Works, whether because of an accident, unforeseeable event or otherwise.

7.6.2 The Contractor shall comply with the instruction within a reasonable time, which shall be the time (if any) specified in the instruction, or immediately if urgency is specified under sub-paragraph (c).

7.6.3 If the Contractor fails to comply with the instruction, the Procuring Entity shall be entitled to employ and pay other persons to carry out the work. Except to the extent that the Contractor would have been entitled to payment for the work, the Contractor shall subject to Sub-Clause 2.5 [Procuring Entity's Claims] pay to the Procuring Entity all costs arising from this failure.

7.7 Ownership of Plant and Materials

Except as otherwise provided in the Contract, each item of Plant and Materials shall, to the extent consistent with the Laws of the Country, become the property of the Procuring Entity at whichever is the earlier of the following times, free from liens and other encumbrances:

a) When it is incorporated in the Works;

b) when the Contractor is paid the corresponding value of the Plant and Materials under Sub-Clause 8.10 [Payment for Plant and Materials in Event of Suspension].

7.8 Royalties

Unless otherwise stated in the Specification, the Contractor shall pay all royalties, rents and other payments for:

a) Natural Materials obtained from outside the Site, and

b) The disposal of material from demolitions and excavations and of other surplus material (whether natural or man-made), except to the extent that disposal areas within the Site are specified in the Contract.

8. COMMENCEMENT, DELAYS AND SUSPENSION

8.1 Commencement of Works

8.1.1 Except as otherwise specified in the Special Conditions of Contract, the Commencement Date shall be the date at which the following precedent conditions have all been fulfilled and the Engineer's notification recording the agreement of both Parties on such fulfilment and instructing to commence the Work is received by the Contractor:

a) Contract by relevant authorities of the Country;

b) delivery to the Contractor of reasonable evidence of the Procuring Entity's financial arrangements (under Sub-Clause 2.4 [Procuring Entity's Financial Arrangements]);

c) signature of the Contract Agreement by both Parties, and if required, approval of the except if otherwise specified in the **SCC**, effective access to and possession of the Site given to the Contractor together with such permission(s) under (a) of Sub-Clause 1.13 [Compliance with Laws] as required for the commencement of the Works

d) receipt by the Contract or of the Advance Payment under Sub-Clause14.2 [Advance Payment] provided that the corresponding Procuring Entity guarantee has been delivered by the Contractor.

8.1.2 If the said Engineer's instruction is not received by the Contractor within 180 days from his receipt of the Letter of Acceptance, the Contractor shall be entitled to terminate the Contract under Sub-Clause 16.2 [Termination by Contractor].

8.1.3 The Contractor shall commence the execution of the Works as soon as is reasonably practicable after the Commencement Date and shall then proceed with the Works with due expedition and without delay.

8.2 Time for Completion

The Contractor shall complete the whole of the Works, and each Section (if any), within the Time for Completion for the Works or Section (as the case may be), including:

a) achieving the passing of the Tests on Completion, and

b) completing all work which is stated in the Contract as being required for the Works or Section to be considered to be completed for the purposes of taking-over under Sub-Clause 10.1 [Taking Over of the Works and Sections].

8.3 Programme

8.3.1 The Contractor shall submit a detailed time programme to the Engineer within 14 days after receiving the notice under Sub-Clause 8.1 [Commencement of Works]. The Contractor shall also submit a revised programme whenever the previous programme is inconsistent with actual progress or with the Contractor's obligations. Each programme shall include:

a) the order in which the Contractor intends to carry out the Works, including the anticipated timing ofeach stage of design (if any), Contractor's Documents, procurement, manufacture of Plant, delivery to Site, construction, erection and testing,

b) each of these stages for work by each nominated Subcontractor (as defined in Clause 5 [Nominated Subcontractors]),

c) the sequence and timing of inspections and tests specified in the Contract, and

d) a supporting report which includes:

   i) a general description of the methods which the Contract or intends to adopt, and of the major stages, in the execution of the Works, and

   ii) details showing the Contractor's reasonable estimate of the number of each class of Contractor's Personnel and of each type of Contractor's Equipment, required on the Site for each major stage.

8.3.2 Unless the Engineer, within 14 days after receiving a programme, gives notice to the Contractor stating the extent to which it does not comply with the Contract, the Contractor shall proceed in accordance with the programme, subject to his other obligations under the Contract. The Procuring Entity's Personnel shall be entitled to rely upon the programme when planning their activities.

8.3.3 The Contractor shall promptly give notice to the Engineer of specific probable future events or circumstances which may adversely affect the work, increase the Contract Price or delay the execution of the Works. The Engineer may require the Contractor to submit an estimate of the anticipated effect of the future event or circumstances, and/or a proposal under Sub-Clause 13.3 [Variation Procedure].

8.3.4 If, at anytime, the Engineer gives notice to the Contractor that a programme fails (to the extent stated) to comply with the Contract or to be consistent with actual progress and the Contractor's stated intentions, the Contractor shall submit a revised programme to the Engineer in accordance with this Sub-Clause.

8.4 Extension of Time for Completion

8.4.1 The Contractor shall be entitled subject to Sub-Clause 20.1 [Contractor's Claims] to an extension of the Time for Completion if and to the extent that completion for the purposes of Sub-Clause10.1 [Taking Over of the Works and Sections] is or will be delayed by any of the following causes:

a) a Variation (unless an adjustment to the Time for Completion has been agreed under Sub-Clause 13.3 [Variation Procedure]) or other substantial change in the quantity of an item of work included in the Contract,

b) a cause of delay giving an entitlement to extension of time under a Sub-Clause of these Conditions,

c) exceptionally adverse climatic conditions,

d) Unforeseeable shortages in the availability of personnel or Goods caused by epidemic or governmental actions, or

e) Any delay, impediment or prevention caused by or attributable to the Procuring Entity, the Procuring Entity's Personnel, or the Procuring Entity's other contractors.

8.4.2 If the Contractor considers itself to be entitled to an extension of the Time for Completion, the Contractor shall give notice to the Engineer in accordance with Sub-Clause 20.1 [Contractor's Claims]. When determining each extension of time under Sub-Clause 20.1, the Engineer shall review previous determinations and may increase, but shall not decrease, the total extension of time.

8.5 Delays Caused by Authorities

If the following conditions apply, namely:

a) The Contractor has diligently followed the procedures laid down by the relevant legally constituted public authorities in the Country,

b) These authorities delay or disrupt the Contractor's work, and

c) the delay or disruption was Unforeseeable, then this delay or disruption will be considered as a cause of delay under sub-paragraph (b) of Sub-Clause 8.4 [Extension of Time for Completion].

8.6 Rate of Progress

8.6.1 If, at any time:

a) Actual progress is too slow to complete within the Time for Completion, and/or

b) Progress has fallen (or will fall) behind the current programme under Sub-Clause 8.3 [Programme], other than as a result of a cause listed in Sub-Clause 8.4 [Extension of Time for Completion], then the Engineer may instruct the Contractor to submit, under Sub-Clause 8.3 [Programme], a revised programme and supporting report describing the revised methods which the Contractor proposes to adopt in order to expedite progress and complete within the Time for Completion.

Unless the Engineer notifies otherwise, the Contractor shall adopt these revised methods, which may require increases in the working hours and/or in the numbers of Contractor's Personnel and/or Goods, at the risk and cost of the Contractor. If these revised methods cause the Procuring Entity to incur additional costs, the Contractor shall subject to notice under Sub-Clause 2.5 [Procuring Entity's Claims] pay these costs to the Procuring Entity, in addition to delay damages (if any) under Sub-Clause 8.7 below.

8.6.2 Additional costs of revised methods including acceleration measures, instructed by the Engineer to reduce delays resulting from causes listed under Sub-Clause 8.4 [Extension of Time for Completion] shall be paid by the Procuring Entity, without generating, however, any other additional payment benefit to the Contractor.

8.7 Delay Damages

8.7.1 If the Contractor fails to comply with Sub-Clause 8.2 [Time for Completion], the Contractor shall subject to notice under Sub-Clause 2.5 [Procuring Entity's Claims] pay delay damages to the Procuring Entity for this default. These delay damages shall be the sum stated in the **SCC**, which shall be paid for everyday which shall elapse between the relevant Time for Completion and the datestatedintheTaking-OverCertificate.However, the total amount due under this Sub-Clause shall not exceed the maximum amount of delay damages (if any) stated in the **SCC**.

8.7.2 These delay damages shall be the only damages due from the Contractor for such default, other than in the event of termination under Sub-Clause 15.2 [Termination by Procuring Entity] prior to completion of the Works. These damages shall not relieve the Contractor from his obligation to complete the Works, or from any other duties, obligations or responsibilities which he may have under the Contract.

8.8 Suspension of Work

The Engineer may at any time instruct the Contractor to suspend progress of part or all of the Works. During such suspension, the Contractor shall protect, store and secure such part or the Works against any deterioration, loss or damage.

The Engineer may also notify the cause for the suspension. If and to the extent that the cause is notified and is the responsibility of the Contractor, the following Sub-Clauses 8.9, 8.10 and 8.11 shall not apply.

8.9 Consequences of Suspension

8.9.1 If the Contractor suffers delay and/or incurs Cost from complying with the Engineer's instructions under Sub-Clause 8.8 [Suspension of Work] and/or from resuming the work, the Contractor shall give notice to the Engineer and shall been titled subject to Sub-Clause 20.1 [Contractor's Claims] to:

a) An extension of time for any such delay, if completion is or will be delayed, under Sub-Clause 8.4 [Extension of Time for Completion], and

b) Payment of any such Cost, which shall be included in the Contract Price.

After receiving this notice, the Engineer shall proceed in accordance with Sub-Clause 3.5 [Determinations] to agree or determine these matters.

8.9.2 The Contractor shall not be entitled to an extension of time for, or to payment of the Cost incurred in, making good the consequences of the Contractor's faulty design, workmanship or materials, or of the Contractor's failure to protect, store or secure in accordance with Sub-Clause 8.8 [Suspension of Work].

8.10 Payment for Plant and Materials in Event of Suspension

The Contractor shall be entitled to payment of the value (as at the date of suspension) of Plant and/or Materials which have not been delivered to Site, if:

a) the work on Plant or delivery of Plant and/or Materials has been suspended for more than 30 days, and
b) the Contractor has marked the Plant and/or Materials as the Procuring Entity's property in accordance with the Engineer's instructions.

8.11 Prolonged Suspension

If the suspension under Sub-Clause 8.8 [Suspension of Work] has continued for more than 84 days, the Contractor may request the Engineer's permission to proceed. If the Engineer does not give permission within 30 days after being requested to do so, the Contractor may, by giving notice to the Engineer, treat the suspension as an omission under Clause 13 [Variations and Adjustments] of the affected part of the Works. If the suspension affects the whole of the Works, the Contractor may give notice of termination under Sub-Clause 16.2 [Termination by Contractor].

8.12 Resumption of Work

After the permission or instruction to proceed is given, the Contractor and the Engineer shall jointly examine the Works and the Plant and Materials affected by the suspension. The Contractor shall make good any deterioration or defect in or loss of the Works or Plant or Materials, which has occurred during the suspension after receiving from the Engineer an instruction to this effect under Clause13 [Variations and Adjustments].

9. TESTS ON COMPLETION

9.1 Contractor's Obligations

9.1.1 The Contractor shall carry out the Tests on Completion in accordance with this Clause and Sub-Clause 7.4 [Testing], after providing the documents in accordance with sub-paragraph (d) of Sub-Clause 4.1 [Contractor's General Obligations].

9.1.2 The Contractor shall give to the Engineer not less than 21 days' notice of the date after which the Contract or will be ready to carry out each of the Tests on Completion. Unless otherwise agreed, Tests on Completion shall be carried out within 14 days after this date, on such day or days as the Engineer shall instruct.

9.1.3 In considering the results of the Tests on Completion, the Engineer shall make allowances for the effect of any use of the Works by the Procuring Entity on the performance or other characteristics of the Works. As soon as the Works, or a Section, have passed any Tests on Completion, the Contractor shall submit a certified report of the results of these Tests to the Engineer.

9.2 Delayed Tests

9.2.1 If the Tests on Completion are being unduly delayed by the Procuring Entity, Sub-Clause 7.4 [Testing] (fifth paragraph) and/or Sub-Clause 10.3 [Interference with Tests on Completion] shall be applicable.

If the Tests on Completion are being unduly delayed by the Contractor, the Engineer may by notice require the Contractor to carry out the Tests within 21 days after receiving the notice. The Contractor shall carry out the Tests on such day or days within that period as the Contract or may fix and of which he shall give notice to the Engineer.

If the Contractor fails to carry out the Tests on Completion within the period of 21 days, the Procuring Entity's Personnel may proceed with the Tests at the risk and cost of the Contractor. The Tests on Completion shall then be deemed to have been carried out in the presence of the Contract or and the results of the Tests shall be accepted as accurate.

9.3 Retesting

If the Works, or a Section, fail to pass the Tests on Completion, Sub-Clause 7.5 [Rejection] shall apply, and the Engineer or the Contractor may require the failed Tests, and Tests on Completion on any related work, to be repeated under the same terms and conditions.

9.4 Failure to Pass Tests on Completion

9.4.1 If the Works, or a Section, fail to pass the Tests on Completion repeated under Sub-Clause 9.3 [Retesting], the Engineer shall be entitled to:

a) Order further repetition of Tests on Completion under Sub-Clause 9.3;

b) If the failure deprives the Procuring Entity of substantially the whole benefit of the Works or Section, reject the Works or Section (as the case may be), in which event the Procuring Entity shall have the same remedies as are provided in sub-paragraph (c) of Sub-Clause 11.4 [Failure to Remedy Defects]; or

c) Issue a Taking-Over Certificate, if the Procuring Entity so requests.

9.4.2 In the event of sub-paragraph (c), the Contractor shall proceed in accordance with all other obligations under the Contract, and the Contract Price shall be reduced by such amount as shall be appropriate to cover the reduced value to the Procuring Entity as a result of this failure. Unless the relevant reduction for this failure is stated (or its method of calculation is defined) in the Contract, the Procuring Entity may require the reduction to be (i) agreed by both Parties (in full satisfaction of this failure only) and paid before this Taking-Over Certificate is issued, or
(ii) determined and paid under Sub-Clause 2.5 [Procuring Entity's Claims] and Sub-Clause 3.5 [Determinations].

10. PROCURING ENTITY'S TAKING OVER

10.1 Taking Over of the Works and Sections

10.1.1 Except as stated in Sub-Clause 9.4 [Failure to Pass Tests on Completion], the Works shall be taken over by the Procuring Entity when (i) the Works have been completed in accordance with the Contract, including the matters described in Sub-Clause 8.2 [Time for Completion] and except as allowed in sub-paragraph (a) below, and (ii) a Taking-Over Certificate for the Works has been issued, or is deemed to have been issued in accordance with this Sub-Clause.

10.1.2 The Contract or may apply by notice to the Engineer for a Taking-Over Certificate not earlier than 14 days before the Works will, in the Contractor's opinion, be complete and ready for taking over. If the Works are divided into Sections, the Contract or may similarly apply for a Taking-Over Certificate for each Section.

The Engineer shall, within 30 days after receiving the Contractor's application:

a) issue the Taking-Over Certificate to the Contractor, stating the date on which the Works or Section were completed in accordance with the Contract, except for any minor outstanding work and defects which will not substantially affect the use of the Works or Section for their intended purpose (either until or whilst this work is completed and these defects are remedied); or

b) reject the application, giving reasons and specifying the work required to be done by the Contractor to enable the Taking-Over Certificate to be issued. The Contractor shall then complete this work before issuing a further notice under this Sub-Clause.

10.1.3 If the Engineer fails either to issue the Taking-Over Certificate or to reject the Contractor's application within the period of 30 days, and if the Works or Section (as the case may be) are substantially in accordance with the Contract, the Taking-Over Certificate shall be deemed to have been issued on the last day of that period.

10.2 Taking Over of Parts of the Works

10.2.1 The Engineer may, at the sole discretion of the Procuring Entity, issue a Taking-Over Certificate for any part of the Permanent Works.

The Procuring Entity shall not use any part of the Works (other than as a temporary measure which is either specified in the Contract or agreed by both Parties) unless and until the Engineer has issued a Taking-Over Certificate for this part. However, if the Procuring Entity does use any part of the Works before the Taking-Over Certificate isissued:

a) The part which is used shall be deemed to have been taken over as from the date on which it is used,

b) The Contractor shall cease to be liable for the care of such part as from this date, when responsibility shall pass to the Procuring Entity, and

c) If requested by the Contractor, the Engineer shall issue a Taking-Over Certificate for this part.

10.2.2 After the Engineer has issued a Taking-Over Certificate for a part of the Works, the Contractor shall be given the earliest opportunity to take such steps as may be necessary to carry out any outstanding Tests onCompletion. The Contractor shall carry out these Tests on Completion as soon as practicable before the expiry date of the relevant Defects Notification Period.

10.2.3 If the Contractor incurs Cost as a result of the Procuring Entity taking over and/or using a part of the Works, other than such use as is specified in the Contractor agreed by the Contractor, the Contractor shall (i) give notice to the Engineer and (ii) be entitled subject to Sub-Clause 20.1 [Contractor's Claims] to payment of any such Cost-plus profit, which shall be included in the Contract Price. After receiving this notice, the Engineer shall proceed in accordance with Sub-Clause 3.5 [Determinations] to agree or determine this Cost and profit.

10.2.4 If a Taking-Over Certificate has been issued for a part of the Works (other than a Section), the delay damages there after for completion of the remainder of the Works shall be reduced. Similarly, the delay damages for the remainder of the Section (if any) in which this part is included shall also be reduced. For any period of delay after the date stated in this Taking-Over Certificate, the proportional reduction in these delay damages shall be calculated as the proportion which the value of the part so certified bears to the value of the Works or Section (as the case may be) as a whole. The Engineer shall proceed in accordance with Sub-Clause 3.5 [Determinations] to agree or determine these proportions. The provisions of this paragraph shall only apply to the daily rate of delay damages under Sub-Clause 8.7 [Delay Damages] and shall not affect the maximum amount of these damages.

10.3 Interference with Tests on Completion

10.3.1 If the Contractor is prevented, for more than 14 days, from carrying out the Tests on Completion by a cause for which the Procuring Entity is responsible, the Procuring Entity shall be deemed to have taken over the Works or Section (as the case may be) on the date when the Tests on Completion would otherwise have been completed.

The Engineer shall then issue a Taking-Over Certificate accordingly, and the Contractor shall carry out the Tests on Completion as soon as practicable, before the expiry date of the Defects Notification Period. The Engineer shall require the Tests on Completion to be carried out by giving 14 days' notice and in accordance with the relevant provisions of the Contract.

10.3.2 If the Contractor suffers delay and/or incurs Cost as a result of this delay in carrying out the Tests on Completion, the Contractor shall give notice to the Engineer and shall be entitled subject to Sub-Clause 20.1 [Contractor's Claims] to:

a) An extension of time for any such delay, if completion is or will be delayed, under Sub-Clause 8.4 [Extension of Time for Completion], and
b) Payment of any such Cost-plus profit, which shall be included in the Contract Price.

10.3.3 After receiving this notice, the Engineer shall proceed in accordance with Sub-Clause 3.5 [Determinations] to agree or determine these matters.

10.4 Surfaces Requiring Reinstatement

Except as otherwise stated in a Taking-Over Certificate, a certificate for a Section or part of the Works shall not be deemed to certify completion of any ground or other surfaces requiring reinstatement.

11. Defects Liability

11.1 Completion of Outstanding Work and Remedying Defects

In order that the Works and Contractor's Documents, and each Section, shall be in the condition required by the Contract (fair wear and tear excepted) by the expiry date of the relevant Defects Notification Period or as soon as practicable there after, the Contractor shall:

a) complete any work which is outstanding on the date stated in a Taking-Over Certificate, within such reasonable time as is instructed by the Engineer, and

b) execute all work required to remedy defects or damage, as may be notified by (or on behalf of) the Procuring Entity on or before the expiry date of the Defects Notification Period for the Works or Section (as the case may be).

If a defect appears or damage occurs, the Contractor shall be notified accordingly, by (or on behalf of) the Procuring Entity.

11.2 Cost of Remedying Defects

11.2.1 All work referred to in sub-paragraph (b) of Sub-Clause 11.1 [Completion of Outstanding Work and Remedying Defects] shall be executed at the risk and cost of the Contractor, if and to the extent that the work is attributable to:

a) Any design for which the Contractor is responsible,
b) Plant, Materials or workmanship not being in accordance with the Contract, or
c) Failure by the Contractor to comply with any other obligation.

11.2.2 If and to the extent that such work is attributable to any other cause, the Contractor shall be notified promptly by (or on behalf of) the Procuring Entity, and Sub-Clause 13.3 [Variation Procedure] shall apply.

11.3 Extension of Defects Notification Period

11.3.1 The Procuring Entity shall be entitled subject to Sub-Clause 2.5 [Procuring Entity's Claims] to an extension of the Defects Notification Period for the Works or a Section if and to the extent that the Works, Section or a major item of Plant (as the case may be, and after taking over) cannot be used for the purposes for which they are intended by reason of a defect or by reason of damage attributable to the Contractor. However, a Defects Notification Period shall not be extended by more than two years.

11.3.2 If delivery and/or erection of Plant and/or Materials was suspended under Sub-Clause 8.8 [Suspension of Work] orSub-Clause 16.1 [Contractor's Entitlement to Suspend Work], the Contractor's obligations under this Clause shall not apply to any defects or damage occurring more than two years after the Defects Notification Period for the Plant and/or Materials would otherwise have expired.

11.4 Failure to Remedy Defects

11.4.1 If the Contractor fails to remedy any defector damage within a reasonable time, a date may be fixed by (or on behalf of) the Procuring Entity, on or by which the defect or damage is to be remedied. The Contractor shall be given reasonable notice of this date.

11.4.2 If the Contractor fails to remedy the defect or damage by this notified date and this remedial work was to be executed at the cost of the Contractor under Sub-Clause 11.2 [Cost of Remedying Defects], the Procuring Entity may (at his option):

a) Carry out the work itself or by others, in a reasonable manner and at the Contractor's cost, but the Contractor shall have no responsibility for this work; and the Contractor shall subject to Sub-Clause 2.5 [Procuring Entity's Claims] pay to the Procuring Entity the costs reasonably incurred by the Procuring Entity in remedying the defect or damage;
b) Require the Engineer to agree or determine a reasonable reduction in the Contract Price in accordance with Sub-Clause3.5 [Determinations]; or
c) If the defect or damage deprives the Procuring Entity of substantially the whole benefit of the Works or any major part of the Works, terminate the Contract as a whole, or in respect of such major part which cannot be put to the intended use.

11.4.3 Without prejudice to any other rights, under the Contractor otherwise, the Procuring Entity shall then be entitled to recover all sums paid for the Works or for such part (as the case may be), plus financing costs and the cost of dismantling the same, clearing the Site and returning Plant and Materials to the Contractor.

11.5 Removal of Defective Work

If the defect or damage cannot be remedied expeditiously on the Site and the Procuring Entity gives consent, the Contractor may remove from the Site for the purposes of repair such items of Plant as are defective or damaged. This consent may require the Contractor to increase the amount of the Performance Security by the full replacement cost of these items, or to provide other appropriate security.

11.6 Further Tests

If the work of remedying of any defect or damage may affect the performance of the Works, the Engineer may require the repetition of any of the tests described in the Contract. The requirement shall be made by notice within 30 days after the defect or damage is remedied.

These tests shall be carried out in accordance with the terms applicable to the previous tests, except that hey shall be carried out at the risk and cost of the Party liable, under Sub-Clause 11.2 [Cost of Remedying Defects], for the cost of the remedial work.

11.7 Right of Access

Until the Performance Certificate has been issued, the Contractor shall have such right of access to the Works as is reasonably required in order to comply with this Clause, except as may be inconsistent with the Procuring Entity's reasonable security restrictions.

11.8 Contractor to Search

The Contractor shall, if required by the Engineer, search for the cause of any defect, under the direction of the Engineer. Unless the defect is to be remedied at the cost of the Contractor under Sub-Clause 11.2 [Cost of Remedying Defects], the Cost of the search plus profit shall be agreed or determined by the Engineer in accordance with Sub-Clause 3.5 [Determinations] and shall be included in the Contract Price.

11.9 Completion Certificate

11.9.1 Performance of the Contractor's obligations shall not be considered to have been completed until the Engineer has issued the Performance Certificate to the Contractor, stating the date on which the Contractor completed his obligations under the Contract.

11.9.2 The Engineer shall issue the Performance Certificate within 30 days after the latest of the expiry dates of the Defects Notification Periods, or as soon thereafter as the Contractor has supplied all the Contractor's Documents and completed and tested all the Works, including remedying any defects. A copy of the Performance Certificate shall be issued to the Procuring Entity.

11.9.3 Only the Performance Certificate shall be deemed to constitute acceptance of the Works.

11.10 Unfulfilled Obligations

After the Performance Certificate has been issued, each Party shall remain liable for the fulfilment of any obligation which remains unperformed at that time. For the purposes of determining the nature and extentof unperformed obligations, the Contract shall be deemed to remain in force.

11.11 Clearance of Site

11.11.1 Upon receiving the Performance Certificate, the Contractor shall remove any remaining Contractor's Equipment, surplus material, wreckage, rubbish and Temporary Works from the Site.

11.11.2 If all these items have not been removed within 30 days after receipt by the Contractor of the Performance Certificate, the Procuring Entity may sell or otherwise dispose of any remaining items. The Procuring Entity shall be entitled to be paid the costs incurred in connection with, or attributable to, such sale or disposal and restoring the Site.

Any balance of the moneys from the sale shall be paid to the Contractor. If these moneys are less than the Procuring Entity's costs, the Contractor shall pay the outstanding balance to the Procuring Entity.

12. MEASUREMENT AND EVALUATION

12.1 Works to be Measured

12.1.1 The Works shall be measured, and valued for payment, in accordance with this Clause. The Contractor shall show in each application under Sub-Clauses 14.3 [Application for Interim Payment Certificates], 14.10 [Statement on Completion] and 14.11 [Application for Final Payment Certificate] the quantities and other particulars detailing the amounts which he considers to be entitled under the Contract.

12.1.2 Whenever the Engineer requires any part of the Works to be measured, reasonable notice shall be given to the Contractor's Representative, who shall:

a) promptly either attend or send another qualified representative to assist the Engineer in making the measurement, and

(b) supply any particulars requested by the Engineer.

If the Contractor fails to attend or send a representative, the measurement made by (or on behalf of) the Engineer shall be accepted as accurate.

12.1.3 Except as otherwise stated in the Contract, wherever any Permanent Works are to be measured from records, these shall be prepared by the Engineer. The Contractor shall, as and when requested, attend to examine and agree the records with the Engineer, and shall sign the same when agreed. If the Contractor does not attend, the records shall be accepted as accurate.

12.1.4 If the Contractor examines and disagrees the records, and/or does not sign them as agreed, then the Contractor shall give notice to the Engineer of the respects in which the records are asserted to be inaccurate. After receiving this notice, the Engineer shall review the records and either confirm or vary them and certify the payment of the undisputed part. If the Contractor does not so give notice to the Engineer within 14 days after being requested to examine the records, they shall be accepted as accurate.

12.2 Method of Measurement

Except as otherwise stated in the Contract and notwithstanding local practice:

a) Measurement shall be made of the net actual quantity of each item of the Permanent Works, and

b) The method of measurement shall be in accordance with the Bills of Quantities or other applicable Schedules.

12.3 Evaluation

12.3.1 Except as otherwise stated in theContract, the Engineer shallproceed in accordance with Sub-Clause 3.5 [Determinations] to agree or determine the Contract Price by evaluating each item of work, applying the measurement agreed or determined in accordance with the above Sub-Clauses 12.1 and 12.2 and the appropriate rate or price for the item.

For each item of work, the appropriate rate or price for the item shall be the rate or price specified for such item in the Contractor, if there is no such item, specified for similar work.

12.3.2 Any item of work included in the Bills of Quantities for which no rate or price was specified shall be considered as included in other rates and prices in the Bills of Quantities and will not be paid for separately.

However, a new rate or price shall be appropriate for an item of work if:

a) I) the measured quantity of the item is changed by more than 25% from the quantity of this item in the Bills of Quantities or another Schedule,

ii) This change in quantity multiplied by such specified rate fo rthis item exceeds 0.25% of the Accepted Contract Amount,

iii) This change in quantity directly changes the Cost per unit quantity of this item by more than 1%, and

iv) This item is not specified in the Contract as a “fixed rate item”; or

b) i) the work is instructed under Clause 13 [Variations and Adjustments],

ii) no rate or price is specified in the Contract for this item, and

iii) no specified rate or price is appropriate because the item of work is not of similar character, or is not executed under similar conditions, as any item in the Contract.

12.3.3 Each new rate or price shall be derived from any relevant rates or prices in the Contract, with reasonable adjustments to take account of the matters described in sub-paragraph (a) and/or (b), as

applicable. If no rates or prices are relevant for the derivation of a new rate or price, it shall be derived from the reasonable Cost of executing the work, together with profit, taking account of any other relevant matters.

12.3.4 Until such time as an appropriate rate or price is agreed or determined, the Engineer shall determine a provisional rate or price for the purposes of Interim Payment Certificates as soon as the concerned work commences.

12.3.5 Where the contract price is different from the corrected tender price, in order to ensure the contractor is not paid less or more relative to the contract price (*which would be the tender price*), payment valuation certificates and variation orders on omissions and additions valued based on rates in the Bill of Quantities or schedule of rates in the Tender, will be adjusted by a plus or minus percentage. The percentage already worked out during tender evaluation is worked out as follows: *(corrected tender price–tender price)/tender price X 100*.

12.4 Omissions

Whenever the omission of any work forms part (or all) of a Variation, the value of which has not been agreed, if:

a) the Contractor will incur (or has incurred) cost which, if the work had not been omitted, would have been deemed to be covered by a sum forming part of the Accepted Contract Amount;
b) the omission of the work will result (or has resulted) in this sum not forming part of the Contract Price; and
c) this cost is not deemed to be included in the evaluation of any substituted work; then the Contractor shall give notice to the Engineer accordingly, with supporting particulars. Upon receiving this notice, the Engineer shall proceed in accordance with Sub-Clause 3.5 [Determinations] to agree or determine this cost, which shall be included in the Contract Price.

13. VARIATIONS AND ADJUSTMENTS

13.1 Right to Vary

13.1.1 Variations may be initiated by the Engineer at any time prior to issuing the Taking-Over Certificate for the Works, either by an instruction or by a request for the Contractor to submit a proposal.

13.1.2 The Contractor shall execute and be bound by each Variation, unless the Contractor promptly gives notice to the Engineer stating (with supporting particulars) that (i) the Contractor cannot readily obtain the Goods required for the Variation, or (ii) such Variation triggers a substantial change in the sequence or progress of the Works. Upon receiving this notice, the Engineer shall cancel, confirm or vary the instruction.
Each Variation may include:

a) Changes to the quantities of any item of work included in the Contract (however, such changes do not necessarily constitute a Variation),
b) Changes to the quality and other characteristics of any item of work,
c) Changes to the levels, positions and/or dimensions of any part of the Works,
d) Omission of any work unless it is to be carried out by others,
e) any additional work, Plant, Materials or services necessary for the Permanent Works, including any associated Tests on Completion, boreholes and other testing and exploratory work, or
f) changes to the sequence or timing of the execution of the Works.

13.1.3 The Contractor shall not make any alteration and/or modification of the Permanent Works, unless and until the Engineer instructs or approves a Variation.

13.2 Value Engineering

13.2.1 The Contract or may, at any time, submit to the Engineer a written proposal which (in the Contractor's opinion) will, if adopted, (i) accelerate completion, (ii) reduce the cost to the Procuring Entity of executing, maintaining or operating the Works, (iii) improve the efficiency or value to the Procuring Entity of the completed Works, or (iv) otherwise be of benefit to the Procuring Entity.

13.2.2 The proposal shall be prepared at the cost of the Contract or and shall include the items listed in Sub- Clause 13.3 [Variation Procedure].

If a proposal, which is approved by the Engineer, includes a change in the design of part of the Permanent Works, then unless otherwise agreed by both Parties:

a) The Contractor shall design this part,

b) sub-paragraphs (a) to (d) of Sub-Clause 4.1 [Contractor's General Obligations] shall apply, and

c) if this change results in a reduction in the contract value of this part, the Engineer shall proceed in accordance with Sub-Clause 3.5 [Determinations] to agree or determine a fee, which shall be included in the Contract Price. This fee shall be half (50%) of the difference between the following amounts:

   i) such reduction in contract value, resulting from the change, excluding adjustments under Sub-Clause 13.7 [Adjustments for Changes in Legislation] and Sub-Clause 13.8 [Adjustments for Changes in Cost], and

   ii) the reduction (if any) in the value to the Procuring Entity of the varied works, taking account of any reductions in quality, anticipated life or operational efficiencies.

13.2.3 However, if amount (i) is less than amount (ii), there shall not be a fee.

13.3 Variation Procedure

13.3.1 If the Engineer requests a proposal, prior to instructing a Variation, the Contractor shall respond in writing as soon as practicable, either by giving reasons why he cannot comply (if this is the case) or by submitting:

a) A description of the proposed work to be performed and a programme for its execution,

b) the Contractor's proposal for any necessary modifications to the programme according toSub-Clause 8.3 [Programme] and to the Time for Completion, and

c) the Contractor's proposal for evaluation of the Variation.

13.3.2 The Engineer shall, as soon as practicable after receiving such proposal (under Sub-Clause 13.2 [Value Engineering] or otherwise), respond with approval, disapproval or comments. The Contractor shall not delay any work whilst awaiting a response.

13.3.3 Each instruction to execute a Variation, with any requirements for the recording of Costs, shall be issued by the Engineer to the Contractor, who shall acknowledge receipt.

Each Variation shall be evaluated in accordance with Clause 12 [Measurement and Evaluation], unless the Engineer instructs or approves otherwise in accordance with this Clause.

13.4 Paymentin Applicable Currencies

If the Contract provides for payment of the Contract Price in more than one currency, then whenever an adjustment is agreed, approved or determined as stated above, the amount payable in each of the applicable currencies shall be specified. For this purpose, reference shall be made to the actual or expected currency proportions of the Cost of the varied work, and to the proportions of various currencies specified for payment of the Contract Price.

13.5 Provisional Sums

13.5.1 Each Provisional Sum shall only be used, in whole or in part, in accordance with the Engineer's instructions, and the Contract Price shall be adjusted accordingly. The total sum paid to the Contractor shall include only such amounts, for the work, supplies or services to which the Provisional Sum relates, as the Engineer shall have instructed. For each Provisional Sum, the Engineer may instruct:

a) Work to be executed (including Plant, Materials or services to be supplied) by the Contractor and valued under Sub-Clause 13.3 [Variation Procedure]; and/or

b) Plant, Materials or services to be purchased by the Contractor, from a nominated Subcontractor (as defined in Clause 5 [Nominated Subcontractors]) or otherwise; and for which there shall be included in the Contract Price:

   i) The actual amounts paid (or due to be paid) by the Contractor, and

   ii) A sum for overhead charges and profit, calculated as a percentage of these actual amounts by applying the relevant percentage rate (if any) stated in the appropriate Schedule.

   iii) If there is no such rate, the percentage rate stated in the **SCC** shall be applied.

13.5.2 The Contractor shall, when required by the Engineer, produce quotations, invoices, vouchers and accounts or receipts in substantiation.

13.6 Daywork

13.6.1 For work of a minor or incidental nature, the Engineer may instruct that a Variation shall be executed on a daywork basis. The work shall then be valued in accordance with the Daywork Schedule included in the Contract, and the following procedure shall apply. If a Daywork Schedule is not included in the Contract, this Sub-Clauses hall nota pply.

Before ordering Goods for the work, the Contractor shall submit quotations to the Engineer. When applying for payment, the Contractor shall submit invoices, vouchers and accounts or receipts for any Goods.

13.6.2 Except for any items for which the Daywork Schedule specifies that payment is not due, the Contractor shall deliver each day to the Engineer accurate statements in duplicate which shall include the following details of the resources used in executing the previous day's work:

a) The names, occupations and time of Contractor's Personnel,

b) The identification, type and time of Contractor's Equipment and Temporary Works, and

c) The quantities and types of Plant and Materials used.

13.6.3 One copy of each statement will, if correct, or when agreed, be signed by the Engineer and returned to the Contractor. The Contractor shall then submit priced statements of these resources to the Engineer, prior to their inclusion in the next Statement under Sub-Clause 14.3 [Application for Interim Payment Certificates].

13.7 Adjustments for Changes in Legislation

13.7.1 The Contract Price shall be adjusted to take account of any increase or decrease in Costresulting from a change in the Laws of the Country (including the introduction of new Laws and the repeal or modification of existing Laws) or in the judicial or official governmental interpretation of such Laws, made after the Base Date, which affect the Contractor in the performance of obligations under the Contract.

13.7.2 If the Contract or suffers (or will suffer) delay and/or incurs (or will incur) additional Cost as a result of these changes in the Laws or in such interpretations, made after the Base Date, the Contractorshall give notice to the Engineer and shall be entitled subject to Sub-Clause 20.1 [Contractor's Claims] to:

a) An extension of time for any such delay, if completion is or will be delayed, under Sub-Clause 8.4 [Extension of Time for Completion], and

b) Payment of any such Cost, which shall be included in the Contract Price.

After receiving this notice, the Engineer shall proceed in accordance with Sub-Clause 3.5 [Determinations] to agree or determine these matters.

13.7.3 Not withstanding the foregoing, the Contractor shall not be entitled to an extension of time if the relevant delay has already been taken into account in the determination of a previous extension of time and such Cost shall not be separately paid if the same shall already have been taken into account inthe index ing of any inputs to the table of adjustment data in accordance with the provisions of Sub-Clause
13.8 [Adjustments for Changes in Cost].

13.8 Adjustments for Changes in Cost

13.8.1 In this Sub-Clause, "table of adjustment data" means the completed table of adjustment data for local and foreign currencies included in the Schedules. If there is no such table of adjustment data, this Sub- Clause shall not apply.

13.8.2 If this Sub-Clause applies, the amounts payable to the Contractor shall be adjusted for rises or falls in the cost of labor, Goods and other inputs to the Works, by the addition or deduction of the amounts determined by the formulae prescribed in this Sub-Clause. To the extent that full compensation for any rise or fall in Costs is not covered by the provisions of this or other Clauses, the Accepted Contract Amount shall be deemed to have included amounts to cover the contingency of other rises and falls in costs.

13.8.3 The adjustment to be applied to the amount otherwise payable to the Contractor, as valued in accordance with the appropriate Schedule and certified in Payment Certificates, shall be determined from formulae for each of the currencies in which the Contract Price is payable. No adjustment is to be applied to work valued on the basis of Cost or current prices. The formulae shall be of the following general type:

Pn = a + b Ln/ Lo + c En/Eo + d Mn/Mo + ... where:

"Pn"is the adjustment multiplier to be applied to the estimated contract value in the relevant currency of the work carried out in period "n", this period being a month unless otherwise stated in the **SCC**;

"a" is a fixed coefficient, stated in the relevant table of adjustment data, representing the non-adjustable portion in contractual payments;

"b", "c", "d" …are coefficients representing the estimated proportion of each cost element related to the execution of the Works, as stated in the relevant table of adjustment data; such tabulated cost elements may be indicative of resources such as labor, equipment and materials;

"Ln", "En", "Mn", … are the current cost indices or reference prices for period "n", expressed in the relevant currency of payment, each of which is applicable to the relevant tabulated cost element on the date 49 days prior to the last day of the period (to which the particular Payment Certificate relates); and

"Lo", "Eo", "Mo", … are the base cost indices or reference prices, expressed in the relevant currency of payment, each of which is applicable to the relevant tabulated cost element on the Base Date.

13.8.4 The cost indices or reference prices stated in the table of adjustment data shall be used. If their source is in doubt, it shall be determined by the Engineer. For this purpose, reference shall be made to the values of the indices at stated dates (quoted in the fourth and fifth columns respectively of the table) for the purposes of clarification of the source; although these dates (and thus these values) may not correspond to the base cost indices.

13.8.5 In cases where the "currency of index" is not the relevant currency of payment, each index shall be converted into the relevant currency of payment at the selling rate, established by the central Procuring Entity of the Country, of this relevant currency on the above date for which the index is required to be applicable.

13.8.6 Until such time as each current cost index is available, the Engineer shall determine a provisional index for the issue of Interim Payment Certificates. When a current cost index is available, the adjustment shall be recalculated accordingly.

13.8.7 If the Contractor fails to complete the Works within the Time for Completion, adjustment of prices thereafter shall be made using either (i) each index or price applicable on the date 49 days prior to the expiry of the Time for Completion of the Works, or (ii) the current index or price, which ever is more favorable to the Procuring Entity.

13.8.8 The weightings (coefficients) for each of the factors of cost stated in the table(s) of adjustment data shall only be adjusted if they have been rendered unreasonable, unbalanced or inapplicable, as a result of Variations.

14. CONTRACT PRICE AND PAYMENT

14.1 The Contract Price

14.1.1 Unless otherwise stated in the Particular Conditions:

a) the Contract Price shall be agreed or determined under Sub-Clause 12.3 [Evaluation] and be subject to adjustments in accordance with the Contract;

b) the Contractor shall pay all taxes, duties and fees required to be paid by him under the Contract, and the Contract Price shall not be adjusted for any of these costs except as stated in Sub-Clause 13.7 [Adjustments for Changes in Legislation];

c) any quantities which may be set out in the Bills of Quantities or other Schedule are estimated quantities and are not to be taken as the actual and correct quantities:

   i) of the Works which the Contractor is required to execute, or

   ii) for the purposes of Clause 12 [Measurement and Evaluation]; and

d) the Contractor shall submit to the Engineer, within 30 days after the Commencement Date, a proposed breakdown of each lumpsum price in the Schedules.

14.1.2 The Engineer may take account of the breakdown when preparing Payment Certificates, but shall not be bound by it.

14.1.3 Not withstanding the provisions of subparagraph (b), Contractor's Equipment, including essential spare parts there for, imported by the Contractor for the sole purpose of executing the Contract shall be exempt from the payment of import duties and taxes upon importation.

14.2 Advance Payment

14.2.1 The Procuring Entity shall make an advance payment, as an interest- free loan for mobilization and cashflow support, when the Contractor submits a guarantee in accordance with this Sub-Clause. The total advance payment, the number and timing of instalments (if more than one), and the applicable currencies and proportions, shall be as stated in the **SCC**. Unless and until the Procuring Entity receives this guarantee, or if the total advance payment is not stated in the **SCC**, this Sub-Clause shall not apply.

14.2.2 The Engineer shall deliver to the Procuring Entity and to the Contractor an Interim Payment Certificate for the advance payment or its first instalment after receiving a Statement (under Sub-Clause 14.3 [Application for Interim Payment Certificates]) and after the Procuring Entity receives (i) the Performance Security in accordance with Sub-Clause 4.2 [Performance Security] and (ii) a guarantee in amounts and currencies equal to the advance payment. This guarantee shall be issued by a reputable Procuring Entity or financial institution selected by the Contractor and shall be in the form annexed to the Particular Conditions or in another form approved by the Procuring Entity.

14.2.3 The Contractor shall ensure that the guarantee is valid and enforceable until the advance payment has been repaid, but its amount shall be progressively reducedbytheamountrepaidbytheContractorasindicatedinthe Payment Certificates. If the terms of the guarantee specify its expiry date, and the advance payment has not been repaid by the date 30 days prior to the expiry date, the Contractor shall extend the validity of the guarantee until the advance payment has been repaid.

14.2.4 Unless stated otherwise in the SCC, the advance payment shall be repaid through percentage deductions from the interim payments determined by the Engineer in accordance with Sub-Clause 14.6 [Issue of Interim PaymentCertificates], as follows:

a) Deductions shall commence in the next interim Payment Certificate following that in which the total of all certified interim payments (excluding the advance payment and deductions and repayments of retention) exceeds 30 percent (30%) of the Accepted Contract Amount less Provisional Sums; and
b) Deductions shall be made at the amortization rate stated in the **SCC** of the amount of each Interim Payment Certificate (excluding the advance payment and deductions for its repayments as well as deductions for retention money) in the currencies and proportions of the advance payment until such time as the advance payment has been repaid; provided that the advance payment shall be completely repaid prior to the time when 90 percent (90%) of the Accepted Contract Amount less Provisional Sums has been certified for payment.

14.2.5 If the advance payment has not been repaid prior to the issue of the Taking-Over Certificate for the Works or prior to termination under Clause 15 [Termination by Procuring Entity], Clause 16 [Suspension and Termination by Contractor] or Clause 19 [Force Majeure] (as the case may be), the whole of the balance then outstanding shall immediately become due and in case of termination under Clause 15 [Termination by Procuring Entity], except for Sub-Clause 15.5 [Procuring Entity's Entitlement to Termination for Convenience], payable by the Contractor to the Procuring Entity.

14.3 Application for Interim Payment Certificates

14.3.1 The Contractor shall submit a Statement in six copies to the Engineer after the end of each month, in aform approved by the Engineer, showing in detail the amounts to which the Contractor considers itself to been titled, together with supporting documents which shall include the report on the progress during this month in accordance with Sub-Clause 4.21 [Progress Reports].

14.3.2 The Statement shall include the following items, as applicable, which shall be expressed in the various currencies in which the Contract Price is payable, in the sequence listed:

a) the estimated contract value of the Works executed and the Contractor's Documents produced up to the end of the month (including Variations but excluding items described in sub-paragraphs (b) to (g) below);
b) any amounts to be added and deducted for changes in legislation and changes in cost, in accordance with Sub-Clause 13.7 [Adjustments for Changes in Legislation] and Sub-Clause 13.8 [Adjustments for Changes in Cost];
c) any amount to be deducted for retention, calculated by applying the percentage of retention stated in the **SCC** to the total of the above amounts, until the amount so retained by the Procuring Entity reaches the limit of Retention Money (if any) stated in the **SCC**;
d) any amounts to be added for the advance payment and (if more than one instalment) and to be deducted for its repayments in accordance with Sub-Clause 14.2 [Advance Payment];
e) any amounts to be added and deducted for Plant and Materials in accordance with Sub-Clause14.5[Plant and Materials intended for the Works];
f) any other additions or deductions which may have become due under the Contract or otherwise, including those under Clause 20 [Claims, Disputes and Arbitration]; and
g) the deduction of amounts certified in all previous Payment Certificates.

14.3.3 Where the contract price is different from the corrected tender price, in order to ensure the contractor is not paid less or more relative to the contract price (*which would be the tender price*), payment valuation certificates and variation orders on omissions and additions valued based on rates in the Bill of Quantities or schedule of rates in the Tender, will be adjusted by a plus or minus percentage. The percentage already worked out during tender evaluation is worked out as follows: *(corrected tender price–tender price)/tender priceX100*.

14.4 Schedule of Payments

14.4.1 If the Contract includes a schedule of payments specifying the instalments in which the Contract Price will be paid, then unless otherwise stated in this schedule:

a) The instalments quoted in this schedule of payments shall be the estimated contract values for the purposes of sub-paragraph (a) of Sub-Clause 14.3 [Application for Interim Payment Certificates];
b) Sub-Clause14.5[Plantand Materials intended for the Works] shall not apply; and
c) If these instalments are not defined by reference to the actual progress achieved in executing the Works, and if actual progress is found to be less or more than that on which this schedule of payments was based, then the Engineer may proceed in accordance with Sub-Clause 3.5 [Determinations] to agree or determine revised instalments, which shall take account of the extent to which progress is less or more than that on which the instalments were previously based.

14.4.2 If the Contract does not include a schedule of payments, the Contractor shall submit non-binding estimates of the payments which he expects to become due during each quarterly period. The first estimate shall be submitted within 42 days after the Commencement Date. Revised estimates shall be submitted at quarterly intervals, until the Taking-Over Certificate has been issued for the Works.

14.5 **Plant and Materials intended for the Works** *(see SCC for lists)*

14.5.1 If this Sub-Clause applies, Interim Payment Certificates shall include, under sub-paragraph (e) of Sub-Clause 14.3, (i) an amount for Plant and Materials which have been sent to the Site for incorporation in the Permanent Works, and (ii) a reduction when the contract value of such Plant and Materials is included as part of the Permanent Works under sub-paragraph (a) of Sub-Clause 14.3 [Application for Interim Payment Certificates].

14.5.2 If the lists referred to in sub-paragraphs (b) (i) or (c) (i) below are not included in the Schedules, this Sub-Clause shall not apply. The Engineer shall determine and certify each addition if the following conditions are satisfied:

a) The Contractor has:
   i) Kept satisfactory records (including the orders, receipts, Costs and use of Plant and Materials) which are available for inspection, and
   ii) Submitted a statement of the Cost of acquiring and delivering the Plant and Materials to the Site, supported by satisfactory evidence;
   and either:
b) The relevant Plant and Materials:
   i) Are those listed in the Schedules for payment when shipped,
   ii) Have been shipped to the Country, enroute to the Site, in accordance with the Contract; and
   iii) are described in a clean shipped bill of lading or other evidence of shipment, which has been submitted to the Engineer together with evidence of payment of freight and insurance, any other documents reasonably required, and an Procuring Entity guarantee in a form and issued by an entity approved by the Procuring Entity in amounts and currencies equal to the amount due under this Sub-Clause: this guarantee may be in a similar form to the form referred to in Sub-Clause 14.2[Advance Payment] and shall be valid until the Plant and Materials are properly stored on Site and protected against loss, damage or deterioration;
c) the relevant Plant and Materials:
   i) are those listed in the Schedules for payment when delivered to the Site, and
   ii) have been delivered to and are properly stored on the Site, are protected against loss, damage or deterioration, and appear to be in accordance with the Contract.

14.5.3 The additional amount to be certified shall be the equivalent of eighty percent (80%) of the Engineer's determination of the cost of the Plant and Materials (including delivery to Site), taking account of the documents mentioned in this Sub-Clause and of the contract value of the Plant and Materials.

14.5.4 The currencies for this additional amount shall be the same as those in which payment will become due when the contract value is included under sub-paragraph (a) of Sub-Clause 14.3 [Application for Interim Payment Certificates]. At that time, the Payment Certificate shall include the applicable reduction which shall be equivalent to, and in the same currencies and proportions as, this additional amount for the relevant Plant and Materials.

14.6 Issue of Interim Payment Certificates

14.6.1 No amount will be certified or paid until the Procuring Entity has received and approved the Performance Security. Thereafter, the Engineer shall, within 30 days after receiving a Statement and supporting documents, deliver to the Procuring Entity and to the Contractor an Interim Payment Certificate which shall

state the amount which the Engineer fairly determines to be due, with all supporting particulars for any reduction or withholding made

However, prior to issuing the Taking-Over Certificate for the Works, the Engineer shall not be bound to issue an Interim Payment Certificate in an amount which would (after retention and other deductions) be less than the minimum amount of Interim Payment Certificates (if any) stated in the **SCC**. In this event, the Engineer shall give notice to the Contractor accordingly.

14.6.2 An Interim Payment Certificate shall not be withheld for any other reason, although:

a) if anything supplied or work done by the Contractor is not in accordance with the Contract, the cost of rectification or replacement may bewithheld until rectification or replacement has been completed; and/or

b) if the Contractor was or is failing to perform any work or obligation in accordance with the Contract, and had been so notified by the Engineer, the value of this work or obligation may be withheld until the work or obligation has been performed.

14.6.3 The Engineer may in any Payment Certificate make any correction or modification that should properly be made to any previous Payment Certificate. A Payment Certificate shall not be deemed to indicate the Engineer's acceptance, approval, consent or satisfaction.

14.7 Payment

14.7.1 The Procuring Entity shall pay to the Contractor:

a) The first instalment of the advance payment within 42 days after issuing the Letter of Acceptance or within 21 days after receiving the documents in accordance with Sub-Clause 4.2 [Performance Security] and Sub-Clause 14.2 [Advance Payment], whichever is later;

b) the amount certified in each Interim Payment Certificate within 56 days after the Engineer receives the Statement and supporting documents; or, at a time when the Procuring Entity's loan or credit (from which part of the payments to the Contractor is being made) is suspended, the amount shown on any statement submitted by the Contractor within 14 days after such statement is submitted, any discrepancy being rectified in the next payment to the Contractor; and

c) the amount certified in the Final Payment Certificate within 56 days after the Procuring Entity receives this Payment Certificate; or, at a time when the Procuring Entity's loan or credit (from which part of the payments to the Contractor is being made) is suspended, the undisputed amount shown in the Final Statement within 56 days after the date of notification of the suspension in accordance with Sub-Clause 16.2 [Termination by Contractor].

14.7.2 Payment of the amount due in each currency shall be made in to the Procuring Entity account, nominated by the Contractor, in the payment country (for this currency) specified in the Contract.

14.8 Delayed Payment

If the Contractor does not receive payment in accordance with Sub-Clause 14.7 [Payment], the Contractor shall be entitled to receive financing charges compounded monthly on the amount unpaid during the period of delay. This period shall be deemed to commence on the date for payment specified in Sub-Clause 14.7 [Payment], irrespective (in the case of its sub-paragraph (b)) of the date on which any Interim Payment Certificate isissued.

Unless otherwise stated in theParticular Conditions, these financing charges shall be calculated at the annual rate of three percentage points above the discount rate of the central Procuring Entity in the country of the currency of payment, or if not available, the inter-Procuring Entity offered rate, and shall be paid in such currency.

The Contractor shall be entitled to this payment without formal notice or certification, and without prejudice to any other right or remedy.

14.9 Payment of Retention Money.

14.9.1 When the Taking-Over Certificate has been issued for the Works, the first half of the Retention Money shall be certified by the Engineer for payment to the Contractor. If a Taking-Over Certificate is issued for a Section or part of the Works, a proportion of the Retention Money shall be certified and paid. This proportion shall be half

(50%) of the proportion calculated by dividing the estimated contract value of the Section or part, by the estimated final Contract Price.

14.9.2 Promptly after the latest of the expiry dates of the Defects Notification Periods, the outstanding balance of the Retention Money shall be certified by the Engineer for payment to the Contractor. If a Taking-Over Certificate was issued for a Section, a proportion of the second half of the Retention Money shall be certified and paid promptly after the expiry date of the Defects Notification Period for the Section. This proportion shall be half (50%) of the proportion calculated by dividing the estimated contract value of the Section by the estimated final Contract Price.

14.9.3 However, if any work remains to be executed under Clause 11 [Defects Liability], the Engineer shall be entitled to withhold certification of the estimated cost of this work until it has been executed.

14.9.4 When calculating these proportions, no account shall be taken of any adjustments under Sub-Clause 13.7 [Adjustments for Changes in Legislation] and Sub-Clause 13.8 [Adjustments for Changes in Cost].

14.9.5 Unless otherwise stated in the Particular Conditions, when the Taking-Over Certificate has been issued for the Works and the first half of the Retention Money has been certified for payment by the Engineer, the Contractor shall be entitled to substitute a guarantee, in the form annexed to the Particular Conditions or in another form approved by the Procuring Entity and issued by a reputable Procuring Entity or financial institution selected by the Contractor, for the second half of the Retention Money. The Contractor shall ensure that the guarantee is in the amounts and currencies of the second half of the Retention Money and is valid and enforceable until the Contract or has executed and completed the Works and remedied any defects, as specified for the Performance Security in Sub-Clause 4.2. On receipt by the Procuring Entity of the required guarantee, the Engineer shall certify and the Procuring Entity shall pay the second half of the Retention Money. The release of the second half of the Retention Money against a guarantee shall then be in lieu of the release under the second paragraph of this Sub-Clause. The Procuring Entity shall return the guarantee to the Contractor within 21 days after receiving a copy of the Performance Certificate.

14.9.6 If the Performance Security required under Sub-Clause 4.2 is in the form of a demand guarantee, and the amount guaranteed under it when the Taking-Over Certificate is issued is more than half of the Retention Money, then the Retention Money guarantee will not be required. If the amount guaranteed under the Performance Security when the Taking-Over Certificate isissued is less than half of the Retention Money, the Retention Money guarantee will only be required for the difference between half of the Retention Money and the amount guaranteed under the Performance Security.

14.10 Statement at Completion.

Within 84 days after receiving the Taking-Over Certificate for the Works, the Contractor shall submit tothe Engineer six copies of a Statement at completion with supporting documents, in accordance with Sub-Clause
14.3 [Application for Interim Payment Certificates], showing:

a) the value of all work done in accordance with the Contract up to the date stated in the Taking-Over Certificate for the Works,
b) any further sums which the Contractor considers to be due, and
c) an estimate of any other amounts which the Contractor considers will become due to him under the Contract. Estimated amounts shall be shown separately in this Statement at completion.

The Engineer shall then certify in accordance with Sub-Clause 14.6 [Issue of Interim Payment Certificates].

14.11 Application for Final Payment Certificate.

14.11.1 Within 56 days after receiving the Performance Certificate, the Contractor shall submit, to the Engineer, six copies of a draft final statement with supporting documents showing in detail in a form approved by the Engineer:

a) The value of all work done in accordance with the Contract, and
b) Any further sums which the Contractor considers to be due to him under the Contractor otherwise.

14.11.2 If the Engineer disagrees with or cannot verify any part of the draft final statement, the Contractor shall submit such further information as the Engineer may reasonably require within 30 days from receipt of said draft and shall make such changes in the draft as may be agreed between them. The Contractor shall

then prepare and submit to the Engineer the final statement as agreed. This agreed statement is referred to in these Conditions as the "Final Statement".

14.11.3 However, if, following discussions between the Engineer and the Contractor and any changes to the draft final statement which are agreed, it becomes evident that a dispute exists, the Engineer shall deliver to the Procuring Entity (with a copy to the Contractor) an Interim Payment Certificate for the agreed parts of the draft final statement. Thereafter, if the dispute is finally resolved under Sub-Clause 20.4 [Obtaining Dispute Board's Decision] or Sub-Clause 20.5 [Amicable Settlement], the Contractor shall then prepare and submit to the Procuring Entity (with a copy to the Engineer) a Final Statement.

14.12 Discharge.

When submitting the Final Statement, the Contractor shall submit a discharge which confirms that the total of the Final Statement represents full and final settlement of all moneys due to the Contractor under or in connection with the Contract. This discharge may state that it becomes effective when the Contractor has received the Performance Security and the outstanding balance of this total, in which event the discharge shall be effective on such date.

14.13 Issue of Final Payment Certificate.

14.13.1 Within 30 days after receiving the Final Statement and discharge in accordance with Sub-Clause 14.11 [Application for Final Payment Certificate] and Sub-Clause 14.12 [Discharge], the Engineer shall deliver, to the Procuring Entity and to the Contractor, the Final Payment Certificate which shall state:

(a) The amount which he fairly determines is finally due, and
(b) After giving credit to the Procuring Entity for all amounts previously paid by the Procuring Entity and for all sums to which the Procuring Entity is entitled, the balance (if any) due from the Procuring Entity to the Contractor or from the Contractor to the Procuring Entity, as the case may be.

14.13.1 If the Contractor has not applied for a Final Payment Certificate in accordance with Sub-Clause 14.11 [Application for Final Payment Certificate] and Sub-Clause 14.12 [Discharge], the Engineer shall request the Contractor to do so. If the Contractor fails to submit an application within a period of 30 days, the Engineer shall issue the Final Payment Certificate for such amount as he fairly determines to be due.

14.14 Cessation of Procuring Entity's Liability.

14.14.1 The Procuring Entity shall not be liable to the Contractor for any matter or thing under or in connection with the Contract or execution of the Works, except to the extent that the Contractor shall have included an amount expressly for it:
a) In the Final Statement and also
b) (except for matters or things arising after the issue of the Taking-Over Certificate for the Works) in the Statement at completion described in Sub-Clause 14.10[Statement at Completion].

14.14.2 However, this Sub-Clause shall not limit the Procuring Entity'sliabilityunderhisindemnificationobligations, or the Procuring Entity's liability in any case of fraud, deliberate default or reckless misconduct by the ProcuringEntity.

14.15 Currencies of Payment.

The Contract Price shall be paid in the currency or currencies named in the Schedule of Payment Currencies.If more than one currency is so named, payments shall be made as follows:
a) If the Accepted Contract Amount was expressed in Local Currency only:
   (i) The proportions or amounts of the Local and Foreign Currencies, and the fixed rates of exchange to be used for calculating the payments, shall be as stated in the Schedule of Payment Currencies, except as otherwise agreed by both Parties;
   ii) payments and deductions under Sub-Clause 13.5 [Provisional Sums] and Sub-Clause 13.7 [Adjustments for Changes in Legislation] shall be made in the applicable currencies and proportions; and
   iii) other payments and deductions under sub-paragraphs (a) to (d) of Sub-Clause 14.3 [Application for

Interim Payment Certificates] shall be made in the currencies and proportions specified in sub-paragraph (a) (i) above;

b) payment of the damages specified in the **SCC**, shall be made in the currencies and proportions specified in the Schedule of Payment Currencies;
c) other payments to the Procuring Entity by the Contractor shall be made in the currency in which the sum was expended by the Procuring Entity, or in such currency as may be agreed by both Parties;
d) if any amount payable by the Contractor to the Procuring Entity in a particular currency exceeds the sum payable by the Procuring Entity to the Contractor in that currency, the Procuring Entity may recover the balance of this amount from the sums otherwise payable to the Contractor in other currencies; and
e) if no rates of exchange are stated in the Schedule of Payment Currencies, they shall be those prevailing on the Base Date and determined by the central Procuring Entity of the Country.

15. TERMINATION BY PROCURING ENTITY

15.1 Notice to Correct.

If the Contractor fails to carry out any obligation under the Contract, the Engineer may by notice require the Contractor to make good the failure and to remedy it within a specified reasonable time.

15.2 Termination by Procuring Entity.

15.2.1 The Procuring Entity shall be entitled to terminate the Contract if the Contractor:
a) fails to comply with Sub-Clause 4.2 [Performance Security] or with a notice under Sub-Clause 15.1 [Notice to Correct],
b) abandons the Works or otherwise plainly demonstrates the intention not to continue performance of his obligations under the Contract,
c) without reasonable excuse fails:
   (i) to proceed with the Works in accordance with Clause 8 [Commencement, Delays and Suspension], or
   ii) to comply with a notice issued under Sub-Clause 7.5 [Rejection] or Sub-Clause 7.6 [Remedial Work], within 30 days after receiving it,
d) subcontracts the whole of the Works or as signs the Contract without the required agreement,
e) becomes bankrupt or insolvent, goes into liquidation, has a receiving or administration order made against him, compounds with his creditors, or carries on business under a receiver, trustee or manager for the benefit of his creditors, or if any act is done or event occurs which (under applicable Laws) has a similar effect to any of these acts or events, or
f) gives or offers to give (directly or indirectly) to any person any bribe, gift, gratuity, commission or other thing of value, as an inducement or reward:
   i) for doing or forbearing to do any action in relation to the Contract, or
   ii) for showing or for bearing to show favor or disfavor to any person in relation to the Contract,
   or if any of the Contractor's Personnel, agents or Subcontractors gives or offers to give (directly or indirectly) to any person any such inducement or reward as is described in this sub-paragraph (f). However, lawful inducements and rewards to Contractor's Personnel shall not entitle termination, or
g) based on reasonable evidence, has engaged in Fraud and Corruption as defined in paragraph 2.2 of the Appendix B to these General Conditions, in competing for or in executing the Contract.

15.2.2 In any of these events or circumstances, the Procuring Entity may, upon giving 14 days' notice to the Contractor, terminate the Contract and expel the Contractor from the Site. However, in the case of sub-paragraph (e) or (f) or (g), the Procuring Entity may by notice terminate the Contract immediately.

15.2.3 The Procuring Entity's election to terminate the Contract shall not prejudice any other rights of the Procuring Entity, under the Contract or otherwise.

The Contractor shall then leave the Site and deliver any required Goods, all Contractor's Documents, and other design documents made by or for him, to the Engineer. However, the Contractor shall use his Lowest efforts to comply immediately with any reasonable instructions included in the notice (i) for the assignment of any subcontract, and (ii) for the protection of life or property or for the safety of the Works.

After termination, the Procuring Entity may complete the Works and/or arrange for any other entities to do so. The Procuring Entity and these entities may then use any Goods, Contractor's Documents and other design documents made by or on behalf of the Contractor.

The Procuring Entity shall then give notice that the Contractor's Equipment and Temporary Works will be released to the Contractor at or near the Site. The Contractor shall promptly arrange their removal, at the risk and cost of the Contractor. However, if by this time the Contractor has failed to make a payment due to the Procuring Entity, these items may be sold by the Procuring Entity in order to recover this payment. Any balance of the proceeds shall then be paid to the Contractor.

15.3 Valuation at Date of Termination.

As soon as practicable after a notice of termination under Sub-Clause 15.2 [Termination by Procuring Entity] has taken effect, the Engineer shall proceed in accordance with Sub-Clause 3.5 [Determinations] to agree or determine the value of the Works, Goods and Contractor's Documents, and any other sums due to the Contractor for work executed in accordance with the Contract.

15.4 Payment after Termination.

After a notice of termination under Sub-Clause 15.2 [Termination by Procuring Entity] has taken effect, the Procuring Entity may:

a) Proceed in accordance with Sub-Clause 2.5 [Procuring Entity's Claims],

b) Withhold further payments to the Contractor until the costs of execution, completion and remedying of any defects, damages for delay in completion (if any), and all other costs incurred by the Procuring Entity, have been established, and/or

c) Recover from the Contractor any losses and damages incurred by the Procuring Entity and any extra costs of completing the Works, after allowing for any sum due to the Contractor under Sub-Clause 15.3 [Valuation at Date of Termination]. After recovering any such losses, damages and extra costs, the Procuring Entity shall pay any balance to the Contractor.

15.5 Procuring Entity's Entitlement to Termination for Convenience.

15.5.1 The Procuring Entity shall be entitled to terminate the Contract, at any time for the Procuring Entity's convenience, by giving notice of such termination to the Contractor. The termination shall take effect 30 days after the later of the dates on which the Contractor receives this notice or the Procuring Entity returns the Performance Security. The Procuring Entity shall not terminate the Contract under this Sub-Clause in order to execute the Works itself or to arrange for the Works to be executed by another contractor or to avoid a termination of the Contract by the Contractor under Clause 16.2[Termination by Contractor].

15.5.2 After this termination, the Contractor shall proceed in accordance with Sub-Clause 16.3 [Cessation of Work and Removal of Contractor's Equipment] and shall be paid in accordance with Sub-Clause 16.4 [Payment on Termination].

15.6 Fraud and Corruption.

The Procuring Entity requires compliance with the national law and regulations against corruption. All available sanctions will apply where corruption is detected.

16. SUSPENSION AND TERMINATION BY CONTRACTOR

16.1 Contractor's Entitlement to Suspend Work.

16.1.1 If the Engineer fails to certify in accordance with Sub-Clause 14.6 [Issue of Interim Payment Certificates] or the Procuring Entity fails to comply with Sub-Clause 2.4 [Procuring Entity's Financial Arrangements] or Sub- Clause 14.7 [Payment], the Contractor may, after giving not less than 21days' notice to the Procuring Entity, suspend work (or reduce the rate of work) unless and until the Contractor has received the Payment Certificate, reasonable evidence or payment, as the case may be and as described in the notice.

16.1.2 Not withstanding the above, if the Procuring Entity has suspended disbursements under the loan or credit from which payments to the Contractor are being made, in whole or in part, for the execution of the Works, and no alternative funds are available as provided for in Sub-Clause 2.4 [Procuring Entity's Financial Arrangements], the Contractor may by notice suspend work or reduce the rate of work at any time, but not

less than 7 days after the Procuring Entity having received the suspension notification from the Procuring Entity.

16.1.3 The Contractor's action shall not prejudice his entitlements to financing charges under Sub-Clause 14.8 [Delayed Payment] and to termination under Sub-Clause 16.2[Termination by Contractor].

16.1.4 If the Contractor subsequently receives such Payment Certificate, evidence or payment (as described in the relevant Sub-Clause and in the above notice) before giving a notice of termination, the Contractor shall resume normal working as soon as is reasonably practicable.

16.1.5 If the Contractor suffers delay and/or incurs Cost as a result of suspending work (or reducing the rate of work) in accordance with this Sub-Clause, the Contractor shall give notice to the Engineer and shall be entitled subject to Sub-Clause 20.1 [Contractor's Claims] to:

a) an extension of time for any such delay, if completion is or will be delayed, under Sub-Clause 8.4 [Extension of Time for Completion], and
b) payment of any such Cost-plus profit, which shall be included in the Contract Price.

16.1.6 After receiving this notice, the Engineers hall proceed in accordance with Sub-Clause 3.5 [Determinations] to agree or determine these matters.

16.2 Termination by Contractor.

16.2.1 The Contractor shall be entitled to terminate the Contract if:

a) the Contractor does not receive the reasonable evidence within 42 days after giving notice under Sub-Clause 16.1 [Contractor's Entitlement to Suspend Work] in respect of a failure to comply with Sub-Clause 2.4 [Procuring Entity's Financial Arrangements],
b) the Engineer fails, within 56 days after receiving a Statement and supporting documents, to issue the relevant Payment Certificate,
c) the Contractor does not receive the amount due under an Interim Payment Certificate within 42 days after the expiry of the time stated in Sub-Clause 14.7 [Payment] within which payment is to be made (except for deductions in accordance with Sub-Clause 2.5 [Procuring Entity's Claims]),
d) the Procuring Entity substantially fails to perform his obligations under the Contract in such manner as to materially and adversely affect the economic balance of the Contract and/or the ability of the Contractor to perform the Contract,
e) the Procuring Entity fails to comply with Sub-Clause 1.6 [Contract Agreement] or Sub-Clause 1.7 [Assignment],
f) a prolonged suspension affects the whole of the Works as described in Sub-Clause 8.11 [Prolonged Suspension], or
g) the Procuring Entity becomes bankrupt or insolvent, goes into liquidation, has a receiving or administration order made against him, compounds with his creditors, or carries on business under a receiver, trustee or manager for the benefit of his creditors, or if any act is done or event occurs which (under applicable Laws) has a similar effect to any of these acts or events.
h) The Contractor does not receive the Engineer's instruction recording the agreement of both Parties on the fulfilment of the conditions for the Commencement of Works under Sub-Clause 8.1 [Commencement of Works.

16.2.2 In any of these events or circumstances, the Contractor may, upon giving 14 days' notice to the Procuring Entity, terminate the Contract. However, in the case of sub-paragraph (f) or (g), the Contractor may by notice terminate the Contract immediately.

16.2.3 In the event the Procuring Entity suspends the loan or credit from which part or whole of the payments to the Contractor are being made, if the Contractor hasnot received the sums due to him upon expiration of the14 days referred to in Sub-Clause 14.7 [Payment] for payments under Interim Payment Certificates, the Contractor may, without prejudice to the Contractor's entitlement to financing charges under Sub-Clause14.8 [Delayed Payment], take one of the following actions, namely (i) suspend work or reduce the rate of work under Sub-Clause 16.1 above, or (ii) terminate the Contract by giving notice to the Procuring Entity, with a copy to the Engineer, such termination to take effect 14 days after the giving of the notice.

The Contractor's election to terminate the Contract shall not prejudice any other rights of the Contractor, under the Contract or otherwise.

16.3 Cessation of Work and Removal of Contractor's Equipment.

After a notice of termination under Sub-Clause 15.5 [Procuring Entity's Entitlement to Termination for Convenience], Sub-Clause 16.2 [Termination by Contractor] or Sub-Clause 19.6 [Optional Termination, Payment and Release] has taken effect, the Contractor shall promptly:

a) Cease all further work, except for such work as may have been instructed by the Engineer for the protection of life or property or for the safety of the Works,

b) Handover Contractor's Documents, Plant, Materials and other work, for which the Contractor has received payment, and

c) Remove all other Goods from the Site, except as necessary for safety, and leave the Site.

16.4 Payment on Termination.

After a notice of termination under Sub-Clause 16.2 [Termination by Contractor] has taken effect, the Procuring Entity shall promptly:

a) Return the Performance Security to the Contractor,

b) pay the Contractor in accordance with Sub-Clause 19.6 [Optional Termination, Payment and Release], and

c) pay to the Contractor the amount of any loss or damage sustained by the Contractor as a result of this termination.

17. RISK AND RESPONSIBILITY

17.1 Indemnities.

17.1.1 The Contractor shall indemnify and hold harmless the Procuring Entity, the Procuring Entity's Personnel, and their respective agents, against and from all claims, damages, losses and expenses (including legal fees and expenses) in respect of:

(a) Bodily injury, sickness, disease or death, of any person whatsoever arising out of or in the course of or by reason of the Contractor's design (if any), the execution and completion of the Works and the remedying of any defects, unless attributable to any negligence, willful actor breach of the Contract by the Procuring Entity, the Procuring Entity's Personnel, or any of the irrespective agents, and

(b) Damage to or loss of any property, real or personal (other than the Works), to the extent that such damage or loss arises out of or in the course of or by reason of the Contractor's design (if any), the execution and completion of the Works and the remedying of any defects, unless and to the extent that any such damage or loss is attributable to any negligence, willful act or breach of the Contract by the Procuring Entity, the Procuring Entity's Personnel, the irrespective agents, or any one directly or indirectly employed by any of them.

17.1.2 The Procuring Entity shall indemnify and hold harmless the Contractor, the Contractor's Personnel, and their respective agents, against and from all claims, damages, losses and expenses (including legal fees and expenses) in respect of (1) bodily injury, sickness, disease or death, which is attributable to any negligence, willful act or breach of the Contract by the Procuring Entity, the Procuring Entity's Personnel, or any oftheir respective agents, and (2) the matters for which liability may be excluded from insurance cover, as described in sub-paragraphs (d)(i), (ii) and (iii) of Sub-Clause 18.3 [Insurance Against Injury to Persons and Damage to Property].

17.2 Contractor's Care of the Works.

17.2.1 The Contractor shall take full responsibility for the care of the Works and Goods from the Commencement Date until the Taking-Over Certificate is issued (or is deemed to be issued under Sub-Clause 10.1 [Taking Over of the Works and Sections]) for the Works, when responsibility for the care of the Works shall pass to the Procuring Entity. If a Taking-Over Certificate is issued (or is so deemed to be issued) for any Section or part of the Works, responsibility for the care of the Section or part shall then pass to the Procuring Entity.

17.2.2 After responsibility has accordingly passed to the Procuring Entity, the Contractor shall take responsibility for the care of any work which is outstanding on the date stated in a Taking-Over Certificate, until this outstanding work has been completed.

17.2.3 If any loss or damage happens to the Works, Goods or Contractor's Documents during the period when the Contractor is responsible for their care, from any cause not listed in Sub-Clause 17.3 [Procuring Entity's Risks], the Contractor shall rectify the loss or damage at the Contractor's risk and cost, so that the Works, Goods and Contractor's Documents conform with the Contract.

17.2.4 The Contractor shall be liable for any loss or damage caused by any actions performed by the Contractor aftera Taking-Over Certificate has been issued. The Contractor shall also be liable for any loss or damage which occurs after a Taking-Over Certificate has been issued and which arose from a previous event for which the Contractor was liable.

17.3 Procuring Entity's Risks.

The risks referred to in Sub-Clause 17.4 [Consequences of Procuring Entity's Risks] below, insofar as they directly affect the execution of the Works in the Country, are:

a) war, hostilities (whether war be declared or not), invasion, act of foreign enemies,
b) rebellion, terrorism, sabotage by persons other than the Contractor's Personnel, revolution, insurrection, military or usurped power, or civil war, within the Country,
c) riot, commotion or disorder within the Country by persons other than the Contractor's Personnel,
d) munitions of war, explosive materials, ionizing radiation or contamination by radio-activity, within the Country, except as may be attributable to the Contractor's use of such munitions, explosives, radiation or radio-activity,
e) pressure waves caused by aircraft or other aerial devices traveling at sonic or supersonic speeds,
f) use or occupation by the Procuring Entity of any part of the Permanent Works, except as may be specified in the Contract,
g) design of any part of the Works by the Procuring Entity's Personnel or by others for whom the Procuring Entity is responsible, and
h) any operation of the forces of nature which is Unforeseeable or against which an experienced contractor could not reasonably have been expected to have taken adequate preventive precautions.

17.4 Consequences of Procuring Entity's Risks.

17.4.1 If and to the extent that any of the risks listed in Sub-Clause 17.3 above results in loss or damage to the Works, Goods or Contractor's Documents, the Contractor shall promptly give notice to the Engineer and shall rectify this loss or damage to the extent required by the Engineer.

17.4.2 If the Contractor suffers delay and/or incurs Cost from rectifying this loss or damage, the Contractor shall give a further notice to the Engineer and shall be entitled subject to Sub-Clause 20.1[Contractor's Claims] to:

a) an extension of time for any such delay, if completion is or will be delayed, under Sub-Clause 8.4 [Extension of Time for Completion], and
b) payment of any such Cost, which shall be included in the Contract Price. In the case of sub-paragraphs (f) and (g) of Sub-Clause 17.3 [Procuring Entity's Risks], Cost plus profit shall be payable.

17.4.3 After receiving this further notice, the Engineer shall proceed in accordance with Sub-Clause 3.5 [Determinations] to agree or determine these matters.

17.5 Intellectual and Industrial Property Rights.

17.5.1 In this Sub-Clause, “infringement” means an infringement (or alleged infringement) of any patent, registered design, copyright, trademark, tradename, trade secret or other intellectual or industrial property right relating to the Works; and “claim” means a claim (or proceedings pursuing a claim) alleging an infringement.

17.5.2 Whenever a Party does not give notice to the other Party of any claim within 30 days of receiving the claim, the first Party shall be deemed to have waived any right to indemnity under this Sub-Clause.

17.5.3 The Procuring Entity shall indemnify and hold the Contractor harmless against and from any claim alleging an infringement which is or was:

a) An unavoidable result of the Contractor's compliance with the Contract, or
b) A result of any Works being used by the Procuring Entity:

i) For a purpose other than that indicated by, or reasonably to be inferred from, the
ii) Contract, or
iii) in conjunction with anything not supplied by the Contractor, unless such use was disclosed to the Contractor prior to the Base Date or is stated in the Contract.

17.5.4 The Contractor shall indemnify and hold the Procuring Entity harmless against and from any other claim which arises out of or in relation to (i) the manufacture, use, sale or import of any Goods, or (ii) any design for which the Contractor is responsible.

17.5.5 If a Party is entitled to be indemnified under this Sub-Clause, the indemnifying Party may (at its cost) conduct negotiations for the settlement of the claim, and any litigation or arbitration which may arise from it. The other Party shall, at the request and cost of the indemnifying Party, assist in contesting the claim. This other Party (and its Personnel) shall not make any admission which might be prejudicial to the indemnifying Party, unless the indemnifying Party failed to take over the conduct of any negotiations, litigation or arbitration upon being requested to do so by such other Party.

17.6 Limitation of Liability.

17.6.1 Neither Party shall be liable to the other Party for loss of use of any Works, loss of profit, loss of any contractor for any indirect or consequential loss or damage which may be suffered by the other Party in connection with the Contract, other than as specifically provided in Sub-Clause 8.7 [Delay Damages]; Sub-Clause 11.2 [Cost of Remedying Defects]; Sub-Clause 15.4 [Payment after Termination]; Sub-Clause 16.4 [Payment on Termination]; Sub-Clause17.1 [Indemnities]; Sub-Clause 17.4 (b) [Consequences of Procuring Entity's Risks] and Sub-Clause 17.5[Intellectual and Industrial Property Rights].

17.6.2 The total liability of the Contractor to the Procuring Entity, under or in connection with the Contract other than under Sub-Clause 4.19 [Electricity, Water and Gas], Sub-Clause 4.20 [Procuring Entity's Equipment and Free- Issue Materials], Sub-Clause 17.1 [Indemnities] and Sub-Clause 17.5 [Intellectual and Industrial Property Rights], shall not exceed the sum resulting from the application of a multiplier (less or greater than one) to the Accepted Contract Amount, as stated in the **SCC**, or (if such multiplier or other sum is not so stated) the Accepted Contract Amount.

17.6.3 This Sub-Clause shall not limit liability in any case of fraud, deliberate default or reckless misconduct by the defaulting Party.

17.7 Use of Procuring Entity's Accommodation/Facilities.

17.7.1 The Contractor shall take full responsibility for the care of the Procuring Entity provided accommodation and facilities, if any, as detailed in the Specification, from the respective dates of hand-over to the Contract or until cessation of occupation (where hand-over or cessation of occupation may take place after the date stated in the Taking-Over Certificate for theWorks).

17.7.2 If any loss or damage happens to any of the above items while the Contractor is responsible for their care arising from any cause whatsoever other than those for which the Procuring Entity is liable, the Contractor shall, at his own cost, rectify the loss or damage to the satisfaction of the Engineer.

18. INSURANCE

18.1 General Requirements for Insurances.

18.1.1 In this Clause, "insuring Party" means, for each type of insurance, the Party responsible for effecting and maintaining the insurance specified in the relevant Sub-Clause.

18.1.2 Wherever the Contractor is the insuring Party, each insurance shall be effected with insurers and in terms approved by the Procuring Entity. These terms shall be consistent with any terms agreed by both Parties before the date of the Letter of Acceptance. This agreement of terms shall take precedence over the provisions of this Clause.

18.1.3 Wherever the Procuring Entity is the insuring Party, each insurance shall be effected with insurers and in terms acceptable to the Contractor. These terms shall be consistent with any terms agreed by both Parties

before the date of the Letter of Acceptance. This agreement of terms shall take precedence over the provisions of this Clause.

18.1.4 If a policy is required to indemnify joint insured, the cover shall apply separately to each insured as though a separate policy had been issued for each of the joint insured. If a policy indemnifies additional joint insured, namely in addition to the insured specified in this Clause, (i) the Contractor shall act under the policy on behalf of these additional joint insured except that the Procuring Entity shall act for Procuring Entity's Personnel, (ii) additional joint insured shall not be entitled to receive payments directly from the insurer or to have any other direct dealings with the insurer, and (iii) the insuring Party shall require all additional joint insured to comply with the conditions stipulated in the policy.

18.1.5 Each policy insuring against loss or damage shall provide for payments to be made in the currencies required to rectify the loss or damage. Payments received from insurers shall be used for the rectification of the loss or damage.

18.1.6 The relevant insuring Party shall, within the respective periods stated in the **SCC** (calculated from the Commencement Date), submit to the other Party:

a) Evidence that the insurances described in this Clause have been effected, and

b) copies of the policies for the insurances described in Sub-Clause 18.2 [Insurance for Works and Contractor's Equipment] and Sub-Clause 18.3 [Insurance against Injury to Persons and Damage to Property].

18.1.7 When each premium is paid, the insuring Party shall submit evidence of payment to the other Party. Whenever evidence or policies are submitted, the insuring Party shall also give notice to the Engineer.

18.1.8 Each Party shall comply with the conditions stipulated in each of the insurance policies. The insuringParty shall keep the insurers informed of any relevant changes to the execution of the Works and ensure that insurance is maintained in accordance with this Clause.

Neither Party shall make any material alteration to the terms of any insurance without the prior approval of the other Party. If an insurer makes (or attempts to make) any alteration, the Party first notified by the insurer shall promptly give notice to the other Party.

18.1.9 The insuring Party fails to effect and keep in force any of the insurances it is required to effect and maintain under the Contract or fails to provide satisfactory evidence and copies of policies in accordance with this Sub- Clause, the other Party may (at its option and without prejudice to any other right or remedy) effect insurance for the relevant coverage and pay the premiums due. The insuring Party shall pay the amount of these premiums to the other Party, and the Contract Price shall be adjusted accordingly.

18.1.10 Nothing in this Clause limits the obligations, liabilities or responsibilities of the Contractor or the Procuring Entity, under the other terms of the Contractor otherwise. Any amounts not insured or not recovered from the insurers shall be borne by the Contractor and/or the Procuring Entity in accordance with these obligations, liabilities or responsibilities. However, if the insuring Party fails to effect and keep in force an insurance which is available and which it is required to effect and maintain under the Contract, and the other Party neither approves the omission nor effects insurance for the coverage relevant to this default, any moneys which should have been recoverable under this insurance shall be paid by the insuring Party.

18.1.11 Payments by one Party to the other Party shall be subject to Sub-Clause 2.5 [Procuring Entity's Claims] or Sub- Clause 20.1[Contractor's Claims], as applicable.

18.1.12 The Contractor shall be entitled to place all insurance relating to the Contract (including, but not limited to the insurance referred to Clause18) with insurers from any eligible source country.

18.2 Insurance for Works and Contractor's Equipment.

18.2.1 The insuring Party shall insure the Works, Plant, Materials and Contractor's Documents for not less than the full reinstatement cost including the costs of demolition, removal of debris and professional fees and profit. This insurance shall be effective from the date by which the evidence is to be submitted under sub-paragraph (a) of Sub-Clause 18.1 [General Requirements for Insurances], until the date of issue of the Taking-Over Certificate for the Works.

18.2.2 The insuring Party shall maintain this insurance to provide cover until the date of issue of the Performance Certificate, for loss or damage for which the Contractor is liable arising from a cause occurring prior to the issue of the Taking-Over Certificate, and for loss or damage caused by the Contractor in the course of any other operations (including those under Clause 11 [Defects Liability]).

18.2.3 The insuring Party shall insure the Contractor's Equipment for not less than the full replacement value, including delivery to Site. For each item of Contractor's Equipment, the insurance shall be effective while it is being transported to the Site and until it is no longer required as Contractor's Equipment.

18.2.4 Unless otherwise stated in the Particular Conditions, insurances under this Sub-Clause:

a) Shall be effected and maintained by the Contractor as insuring Party,

b) shall be in the joint names of the Parties, who shall be jointly entitled to receive payments from the insurers, payments being held or allocated to the Party actually bearing the costs of rectifying the loss or damage,

c) shall cover all loss and damage from any cause not listed in Sub-Clause 17.3 [Procuring Entity's Risks],

d) shall also cover, to the extent specifically required in the tendering documents of the Contract, loss or damage to a part of the Works which is attributable to the use or occupation by the Procuring Entity of another part of the Works, and loss or damage from the risks listed in sub-paragraphs (c), (g) and (h) of Sub-Clause 17.3 [Procuring Entity's Risks], excluding (in each case) risks which are not insurable at commercially reasonable terms, with deductibles per occurrence of not more than the amount stated in the **SCC**(if an amount is not so stated, this sub-paragraph (d) shall not apply), and

e) may however exclude loss of, damage to, and reinstatement of:

   i) a part of the Works which is in a defective condition due to a defect in its design, materials or workmanship (but cover shall include any other parts which are lost or damaged as a direct result of this defective condition and not as described in sub-paragraph (ii) below),

   ii) a part of the Works which is lost or damaged in order to reinstate any other part of the Works if this other part is in a defective condition due to a defect in its design, materials or workmanship,

   iii) a part of the Works which has been taken over by the Procuring Entity, except to the extent that the Contractor is liable for the loss or damage, and

   iv) Goods while they are not in the Country, subject to Sub-Clause 14.5 [Plant and Materials intended for the Works].

18.2.5 If, more than one year after the Base Date, the cover described in sub-paragraph (d) above ceases to be available at commercially reasonable terms, the Contractor shall (as insuring Party) give notice to the Procuring Entity, with supporting particulars. The Procuring Entity shall then (i) be entitled subject to Sub-Clause 2.5 [Procuring Entity's Claims] to payment of an amount equivalent to such commercially reasonable terms as the Contractor should have expected to have paid for such cover, and (ii) be deemed, unless he obtains the cover at commercially reasonable terms, to have approved the omission under Sub-Clause 18.1 [General Requirements for Insurances].

18.3 Insurance against Injury to Persons and Damage to Property.

18.3.1 The insuring Party shall insure against each Party's liability for any loss, damage, death or bodily injury which may occur to any physical property (except things insured under Sub-Clause 18.2 [Insurance for Works and Contractor's Equipment]) or to any person (except persons insured under Sub-Clause 18.4 [Insurance for Contractor's Personnel]), which may arise out of the Contractor's performance of the Contract and occurring before the issue of the Performance Certificate.

18.3.2 This insurance shall be for a limit per occurrence of not less than the amount stated in the **SCC**, with no limit on the number of occurrences. If an amount is not stated in the **SCC**, this Sub-Clause shall not apply. Unless otherwise stated in the Particular Conditions, the insurances specified in this Sub-Clause:

a) Shall be effected and maintained by the Contractor as insuring Party,

b) Shall be in the joint names of the Parties,

c) Shall be extended to cover liability for all loss and damage to the Procuring Entity's property (except things insured under Sub-Clause 18.2) arising out of the Contractor's performance of the Contract, and

d) May however exclude liability to the extent that it arises from:

   i) The Procuring Entity's right to have the Permanent Works executed on, over, under, in or through any land, and to occupy this land for the Permanent Works,

   ii) damage which is an unavoidable result of the Contractor's obligations to execute the Works and remedy any defects, and

   iii) a cause listed in Sub-Clause 17.3 [Procuring Entity's Risks], except to the extent that cover is available at commercially reasonable terms.

18.4 Insurance for Contractor's Personnel.

18.4.1 The Contract or shall effect and maintain insurance against liability for claims, damages, losses and expenses (including legal fees and expenses) arising from injury, sickness, disease or death of any person employed by the Contractor or any other of the Contractor's Personnel.

18.4.2 The insurance shall cover the Procuring Entity and the Engineer against liability for claims, damages, losses and expenses (including legal fees and expenses) arising from injury, sickness, disease or death of any person employed by the Contractor or any other of the Contractor's Personnel, except that this insurance may exclude losses and claims to the extent that they arise from any act or neglect of the Procuring Entity or of the Procuring Entity's Personnel.

18.4.3 The insurance shall be maintained in full force and effect during the whole time that these personnel are assisting in the execution of the Works. For a Subcontractor's employees, the insurance may be effected by the Subcontractor, but the Contractor shall be responsible for compliance with this Clause.

19. FORCE MAJEURE

19.1 Definition of Force Majeure.

In this Clause, "Force Majeure" means an exceptional event or circumstance:

a) Which is beyond a Party's control,
b) Which such Party could not reasonably have provided against before entering into the Contract,
c) which, having arisen, such Party could not reasonably have avoided or overcome, and
d) which is not substantially attributable to the other Party.

Force Majeure may include, but is not limited to, exceptional events or circumstances of the kind listed below, so long as conditions (a) to (d) above are satisfied:

i) war, hostilities (whether war be declared or not), invasion, act of foreign enemies,
ii) rebellion, terrorism, sabotage by persons other than the Contractor's Personnel, revolution, insurrection, military or usurped power, or civil war,
iii) riot, commotion, disorder, strike or lock out by persons other than the Contractor's Personnel,
iv) munitions of war, explosive materials, ionizing radiation or contamination by radio-activity, except as may be attributable to the Contractor's use of such munitions, explosives, radiation or radio-activity, and
v) natural catastrophes such as earthquake, hurricane, typhoon or volcanic activity.

19.2 Notice of Force Majeure.

19.2.1 If a Party is or will be prevented from performing its substantial obligations under the Contract by Force Majeure, then it shall give notice to the other Party of the event or circumstances constituting the Force Majeure and shall specify the obligations, the performance of which is or will be prevented. The notice shall be given within 14 days after the Party became aware, or should have become aware, of the relevant event or circumstance constituting Force Majeure.

19.2.2 The Party shall, having given notice, be excused performance of its obligations for so long as such Force Majeure prevents it from performing them.

Notwithstanding any other provision of this Clause, Force Majeure shall not apply to obligations of either Party to make payments to the other Party under the Contract.

19.3 Duty to Minimize Delay.

Each Party shall at all times use all reasonable endeavors to minimize any delay in the performance of the Contract as a result of Force Majeure. A Party shall give notice to the other Party when it ceases to be affected by the ForceMajeure.

19.4 Consequences of Force Majeure.

19.4.1 If the Contractor is prevented from performing his substantial obligations under the Contract by Force Majeure of which notice has been given under Sub-Clause 19.2 [Notice of Force Majeure], and suffers delay and/or incurs Cost by reason of such Force Majeure, the Contractor shall be entitled subject to Sub-Clause 20.1 [Contractor's Claims] to:

a) an extension of time for any such delay, if completion is or will be delayed, under Sub-Clause 8.4 [Extension of Time for Completion], and

b) if the event or circumstance is of the kind described in sub-paragraphs (i) to (iv) of Sub-Clause 19.1 [Definition of Force Majeure] and, in sub-paragraphs (ii) to (iv), occurs in the Country, payment of any such Cost, including the costs of rectifying or replacing the Works and/or Goods damaged or destroyed by Force Majeure, to the extent they are not indemnified through the insurance policy referred to in Sub-Clause 18.2 [Insurance for Works and Contractor's Equipment].

19.4.2 After receiving this notice, the Engineer shall proceed in accordance with Sub-Clause 3.5 [Determinations] to agree or determine these matters.

19.5 Force Majeure Affecting Subcontractor.

If any Subcontractor is entitled under any contract or agreement relating to the Works to relief from force majeure on terms additional to or broader than those specified in this Clause, such additional or broader force majeure events or circumstances shall not excuse the Contractor's non-performance or entitle him to relief under this Clause.

19.6 Optional Termination, Payment and Release.

If the execution of substantially all the Works in progress is prevented for a continuous period of 84 days by reason of Force Majeure of which notice has been given under Sub-Clause 19.2 [Notice of Force Majeure], or for multiple periods which total more than 140 days due to the same notified Force Majeure, then either Party may give to the other Party a notice of termination of the Contract. In this event, the termination shall take effect 7 days after the notice is given, and the Contractor shall proceed in accordance with Sub-Clause 16.3 [Cessation of Work and Removal of Contractor's Equipment].

Upon such termination, the Engineer shall determine the value of the work done and issue a Payment Certificate which shall include:

a) The amounts payable for any work carried out for which a price is stated in the Contract;

b) The Cost of Plant and Materials ordered for the Works which have been delivered to the Contractor, or of which the Contractor is liable to accept delivery: this Plant and Materials shall become the property of (and be at the risk of) the Procuring Entity when paid for by the Procuring Entity, and the Contractor shall place the same at the Procuring Entity's disposal;

c) other Cost or liabilities which in the circumstances were reasonably and necessarily incurred by the Contractor in the expectation of completing the Works;

d) the Cost of removal of Temporary Works and Contractor's Equipment from the Site and there turn of these items to the Contractor's works in his country (or toanyotherdestinationatnogreatercost);and

e) the Cost of repatriation of the Contractor's staff and labor employed wholly in connection with the Works at the date of termination.

19.7 Release from Performance

Notwithstanding any other provision of this Clause, if any event or circumstance outside the control of the Parties (including, but not limited to, Force Majeure) arises which makes it impossible or unlawful for either or both Parties to fulfil its or their contractual obligations or which, under the law governing the Contract, entitles the Parties to be released from further performance of the Contract, then upon notice by either Party to the other Party of such event or circumstance:

a) The Parties shall be discharged from further performance, without prejudice to the rights of either Party in respect of any previous breach of the Contract, and

b) The sum payable by the Procuring Entity to the Contractor shall be the same as would have been payable under Sub-Clause 19.6 [Optional Termination, Payment and Release] if the Contract had been terminated under Sub-Clause 19.6.

20. CLAIMS, DISPUTES AND ARBITRATION

20.1 Contractor's Claims

20.1.1 If the Contractor considers itself to be entitled to any extension of the Time for Completion and/or any additional payment, under any Clause of these Conditions or otherwise in connection with the Contract, the Contractor shall give Notice to the Engineer, describing the event or circumstance giving rise to the claim. The notice shall be given as soon as practicable, and not later than 30 days after the Contractor became aware, or should have become aware, of the event or circumstance.

20.1.2 IftheContractorfailstogivenoticeofaclaimwithinsuchperiodof30days, the Time for Completion shall not be extended, the Contractor shall not be entitled to additional payment, and the Procuring Entity shall be discharged from all liability in connection with the claim. Otherwise, the following provisions of this Sub-Clauseshallapply.

20.1.3 The Contractor shall also submit any other notices which are required by the Contract, and supporting particulars for the claim, all as relevant to such event or circumstance.

20.1.3 The Contractor shall keep such contemporary records as may be necessary to substantiate any claim, either on the Site or at another location acceptable to the Engineer. Without admitting the Procuring Entity's liability, the Engineer may, after receiving any notice under this Sub-Clause, monitor the record-keeping and/or instruct the Contractor to keep further contemporary records. The Contractor shall permit the Engineer to inspect all these records, and shall (if instructed) submit copies to the Engineer.

20.1.4 Within 42 days after the Contractor became aware (or should have become aware) of the eventor circumstance giving rise to the claim, or within such other period as may be proposed by the Contractor and approved by the Engineer, the Contractor shall send to the Engineer a fully detailed claim which includes full supporting particulars of the basis of the claim and of the extension of time and/or additional payment claimed. If the event or circumstance giving rise to the claim has a continuing effect:

a) This fully detailed claim shall be considered as interim;
b) The Contractor shall send further interim claims at monthly intervals, giving the accumulated delay and/or amount claimed, and such further particulars as the Engineer may reasonably require; and
c) The Contractor shall send a final claim within 30 days after the end of the effects resulting from the event or circumstance, or within such other period as may be proposed by the Contractor and approved by the Engineer.

20.1.5 Within 42 days after receiving a Notice of a claim or any further particulars supporting a previous claim, or within such other period as may be proposed by the Engineer and approved by the Contractor, the Engineer shall respond with approval, or with disapproval and detailed comments. He may also request any necessary further particulars, but shall nevertheless give his response on the principles of the claim within the above defined time period.

20.1.6 Within the above defined period of 42 days, the Engineer shall proceed in accordance with Sub-Clause 3.5 [Determinations] to agree or determine (i) the extension (if any) of theTime for Completion (before or after its expiry) in accordance with Sub-Clause 8.4 [Extension of Time for Completion], and/or (ii) the additional payment (if any) to which the Contractor is entitled under the Contract.

20.1.7 Each Payment Certificate shall include such additional payment for any claim as has been reasonably substantiated as due under the relevant provision of the Contract. Unless and until the particulars supplied are sufficient to substantiate the whole of the claim, the Contractor shall only be entitled to payment for such part of the claim as he has been able to substantiate.

20.1.8 If the Engineer does not respond within the time frame defined in this Clause, either Party may consider that the claim is rejected by the Engineer and any of the Parties may refer to Arbitration in accordance with Sub-Clause 20.4 [Arbitration].

20.1.9 The requirements of this Sub-Clause are in addition to those of any other Sub-Clause which may apply toa claim. If the Contractor fails to comply with this or another Sub-Clause in relation to any claim, any extension of time and/or additional payment shall take account of the extent (if any) to which the failure has prevented or prejudiced proper investigation of the claim, unless the claim is excluded under the second paragraph of Sub- Clause 20.3 (f).

20.2 Amicable Settlement

Where a notice of a claim has been given, both Parties shall attempt to settle the dispute amicably before the commencement of arbitration. However, unless both Parties agree otherwise, the Party giving a notice of a claim in accordance with Sub-Clause 20.1 above should move to commence arbitration after the fifty-sixth day from the day on which a notice of a claim was given, even if no attempt at an amicable settlement has been made.

20.3 Matters that may be referred to arbitration

Notwithstanding anything stated herein the following matters may be referred to arbitration before the practical completion of the Works or abandonment of the Works or termination of the Contract by either party:

a) The appointment of a replacement Engineer upon the said person ceasing to act.
b) Whether or not the issue of an instruction by the Engineer is empowered by these Conditions.
c) Whether or not a certificate has been improperly withheld or is not in accordance with these Conditions.
e) Any dispute arising in respect of war risks or war damage.
f) All other ma tters shall only be referred to arbitration after the completion or alleged completion of the Works or termination or alleged termination of the Contract, unless the Procuring Entity and the Contract or agree otherwise in writing.

20.4 Arbitration

20.4.1 Any claim or dispute between the Parties arising out of or in connection with the Contract not settled amicably in accordance with Sub-Clause 20.3 shall be finally settled by arbitration.

20.4.2 No arbitration proceedings shall be commenced on any claim or dispute where notice of a claim or dispute has not been given by the applying party within ninety days of the occurrence or discovery of the matter or issue giving rise to the dispute.

20.4.3 Notwithstanding the issue of a notice as stated above, the arbitration of such a claim or dispute shall not commence unless an attempt has in the first instance been made by the parties to settle such claim or dispute amicably with or without the assistance of third parties. Proof of such attempt shall be required.

20.4.4 The Arbitrator shall, without prejudice to the generality of his powers, have powers to direct such measurements, computations, tests or valuations as may in his opinion be desirable in order to determine the rights of the parties and assess and award any sums which ought to have been the subject of or included in any certificate.

20.4.5 The Arbitrator shall, without prejudice to the generality of his powers, have powers to open up, review and revise any certificate, opinion, decision, requirement or notice and to determine all matters in dispute which shall be submitted to him in the same manner as if no such certificate, opinion, decision requirement or notice had been given.

20.4.6 The arbitrators shall have full power to open up, review and revise any certificate, determination, instruction, opinion or valuation of the Engineer, relevant to the dispute. Nothing shall disqualify representatives of the Parties and the Engineer from being called as a witness and giving evidence before the arbitrators on any matter whatsoever relevant to the dispute.

20.4.7 Neither Party shall be limited in the proceedings before the arbitrators to the evidence, or to the reasons for dissatisfaction given in its Notice of Dissatisfaction.

20.4.7 Arbitration may be commenced prior to or after completion of the Works. The obligations of the Parties, and the Engineer shall not be altered by reason of any arbitration being conducted during the progress of the Works.

20.4.8 The terms of the remuneration of each or all the members of Arbitration shall be mutually agreed upon by the Parties when agreeing the terms of appointment. Each Party shall be responsible for paying one-half ofthis remuneration.

20.5 ArbitrationwithNationalContractors

20.5.1 if the Contract is with national contractors, arbitration proceedings will be conducted in accordance with the Arbitration Laws of Kenya. In case of any claim or dispute, such claim or dispute shall be notified in writing by either party to the other with a request to submit it to arbitration and to concur in the appointment of an Arbitrator within thirty days of the notice. The dispute shall be referred to the arbitration and final decision of a person to be agreed between the parties. Failing agreement to concur in the appointment of an Arbitrator, the Arbitrator shall be appointed, on the request of the applying party, by the Chairman or Vice Chairman of any of the following professional institutions;

i) Architectural Association of Kenya
ii) Institute of Quantity Surveyors of Kenya
iii) Association of Consulting Engineers of Kenya
iv) Chartered Institute of Arbitrators (Kenya Branch)
v) Institution of Engineers of Kenya

20.5.2 The institution written to first by the aggrieved party shall take precedence over all other institutions.

20.6 Arbitration with Foreign Contractors

20.7.1 Arbitration with foreign contractors shall be conducted in accordance with the arbitration rules of theUnited Nations Commission on International Trade Law (UNCITRAL); or with proceedings administered by the International Chamber of Commerce (ICC) and conducted under the ICC Rules of Arbitration; by one or more arbitrators appointed in accordance with said arbitration rules.

20.7.2 The place of arbitration shall be a location specified in the **SCC;** and the arbitration shall be conducted in the language for communications defined in Sub-Clause 1.4 [Law and Language].

20.7 Alternative Arbitration Proceedings

Alternatively, the Parties may refer the matter to the Nairobi Centre for International Arbitration (NCIA) which offers a neutral venue for the conduct of national and international arbitration with commitment to providing institutional support to the arbitral process.

20.8 Failure to Comply with Arbitrator's Decision

20.8.1 The award of such Arbitrator shall be final and binding upon the parties.

20.8.2 In the event that a Party fails to comply with a final and binding Arbitrator's decision, then the other Party may, without prejudice to any other rights it may have, refer the matter to a competent court of law.

10.7 Contract operations continue

Notwithstanding any reference to arbitration herein,

a) The parties shall continue to perform their respective obligations under the Contract unless they otherwise agree; and
b) The Procuring Entity shall pay the Contractor any monies due the Contractor.

SECTION IX - SPECIAL CONDITIONS OF CONTRACT

The following Particular Conditions shall supplement the GCC. Whenever there is a conflict, the provisions herein shall prevail over those in the GCC.

Condition	**GCC clause**	**Data**
Procuring entitys name and address	1	Kenya Rural Roads Authority, P.O.BOX 48151– 00100, **NAIROBI, KENYA**
Time for compleion	1	12 (Twelve) months
Engineers name and address	1	**Regional Director - Roads,** **Kenya Rural Roads Authority** **Garissa Region.**
Electronic transmission	1.3	Not allowed
Time for the parties entering into a contract agreement	1.6	**After 14(Fourteen) days stand still period**
Time for acces to the site	2.1	No later than the commenecement day ,except for the following parts (if applicable with detailed description of parts concerned :……NA……..days after commencement
Engineers authority to make variation	3.1.2(b)(ii)	Variation would included increase the accepted contract amount by not exceeding…15…% of contract price
Perfomamce security	4.2.2	The perfomamnce security shall be in the amount of …**5% of sum stated as the Contract Price** and denominate in the currency kenya shillings
Contractors representatives name	4.3	As per power of attorney
Working hours	6.5	Normal working hours shall be as per engineers instructions
Key personnel name	6.9	
Commencement of work	8.1	Modification shall be ……per day of delay
Defects notification period	13.5.1.(b) (iii)	365 days
Time for access to the site	2.1	No later than the Commencement Day, except for the following parts (if applicable, with detailed description of parts concerned: _____days after Commencement Date.
Engineers duties and	3.1(b)(ii)	Variations resulting in an increase of theAccepted

authority		Contract Amount in excess of % shall require approval of the Procuring Entity.
Adjustments for changes in cost	13.8.3	Period"n"applicable to the adjustment multiplier "Pn":__*[Insert the period if different from one (1) month' if period " n" is one (1) month, insert "notapplicable"}*
Sustainable procurement	14.1	
Performance security	4.2	The performance security will be in the form of a *"demand bank guarantee"* in the amount(s) of _____ _,_ *insert related jigure(s)}* percent of the Accepted Contract Amount in the same currency(ies) of the ContractAmount.
Normal working hours	4.2	…… Hours per day
Delay damages for the works	8.7 &14.15(b)	…..% of the Contract Price perday. *If Sections are to be used, refer to Table: Summary of Sections below*
Maxmum amount of delay damages		--- % of the final ContractPrice.
Provisional sums	13.5. (b)(ii)	*[If there are Provisional Sums, insert a percentage for adjustment of Provisional Sums]* ___ %, otherwise insert"NONE".
Total advance payment	114.2.1 I	% Percentage of the Accepted Contract Amount payable in the currencies and proportions in which the Accepted Contract Amount is payable *[Insert number and timing of installments if applicable]*
Repayment amortization rate of advance payment	14.2.4(b) __	_%
Limit of retention	14.3.2(c)	The limit of Retention Money(ifany)shall 10% of Interim Payment Certificate
Percentage of retention	14.3	10% of Interim Payment Certificate
Limit of retention money	14.3	5% of the Accepted Contract Amount
Plant and materials	14.S(b)(i)	If Sub-Clause 14.5 applies: Plant and Materials for payment Free on Board ___ ___ ___ ___ ___ ___ *[list].*
	14.S(c)(i)	Plant and Materials for payment when delivered to the Site_____*[list}.*
Minimum Amount of Interim Payment Certificates	14.6	% of the Accepted Contract Amount of Ksh 3 million.
Publishing source of commercial interest rates for financial charges in case of delayed payment	14.8	Three percentage points above the discount rate given by the Central bank of Kenya.

Maximum total liability of the Contractor to the Procuring Entity	17.6	*[Select one of the two options below as appropriate]* Theproductof_____*[insert a multiplier less or greater than one]* times the Accepted ContractAmount, *or* _____*[insert amount of themaximum total liability]*
Periods for submission of insurance:	18.1	*[Insert period for submission of evidence of insurance and policy.Period may be from 14 days to 30 days.]*
a. evidence of insurance.		_ _ _ _ _ days
b. relevant policies		_____days
Maximum number of deductibles for insurance of the Procuring Entity's risks	18.2(d)	*[Insert maximum amount of deductibles}*
Minimum amount of third- party insurance	18.3	KShs. 1,000,000 (Kshs. One million)
The place of arbitration	20.7.2	The place of arbitration shall be The Chartered Institute of Arbitrators (Kenya) ----------

SECTION X - CONTRACT FORMS

Table of Forms

FORM No. 1 - NOTIFICATION OF INTENTION TO AWARD

FORM No. 2 - NOTIFICATION OF AWARD - LETTER OF ACCEPTANCE

FORM No. 3 - CONTRACT AGREEMENT

FORM No. 4 - PERFORMANCE SECURITY [Option 1 - Unconditional Demand Bank Guarantee]

FORM No. 5 - PERFORMANCE SECURITY [Option 2 - Performance Bond]

FORM No. 6 - ADVANCE PAYMENT SECURITY

FORM No. 7 - RETENTION MONEY SECURITY

FORM No. I - Notification of Intention to Award [*This Notification of Intention to Award shall be sent to each Tenderer that submitted a Tender.*] [*Send thisNotification to the Tenderer's Authorized Representative named in the Tender Information Form*]

FORMAT

For the attention of Tenderer's Authorized Representative

Name:……..*[insert Authorized Representative's name]* Address: *[insert Authorized Representative's Address]* Telephones: *[insert Authorized Representative's telephone/fax numbers]* Email Address: *[insert Authorized Representative's email address]*

*[**IMPORTANT:** insert the date that this Notification is transmitted to Tenderers. The Notification must be sent to all Tenderers simultaneously. This means on the same date and as close to the same time as possible.]*

Date of Transmission: This Notification is sent by: [*email*] on [*date*] (local time)

ProcuringEntity: *[insert the name of the Procuring Entity]* Contracttitle: *[insert the name of the contract]*

Country: Kenya, County_____(*if the Procuring Entity is from a County*)

This Notification of Intention to Award (Notification) notifies you of our decision to award the above contract. The transmission of this Notification begins the Standstill Period. During the Standstill Period, you may:

a) Request a debriefing in relation the evaluation of your Tender, and/or

b) Submit a Procurement-related Complaint in relation to the decision to award the contract.

1. The successful Tenderer

Name: [*insert name of successful Tenderer*] Address: [*insert address of the successful Tenderer*] Contract price: [*insert contract price of the successful Tender*]

2. Other Tenderers: *insert names of all Tenderers that submitted a Tender. If the Tender's price was evaluated include the evaluated price as well as the Tender price as read out.]*

	Name of Tenderer	**Tender price**	**Evaluated Tender price**	***Comments (if any)***
1				
2				
3				
4				
5				
6				
7				
Etc.				

1. How to request a de-briefing

DEADLINE: The deadline to request a debriefing expires at midnight on [*insert date*] (local time).

You may request a debriefing in relation to the results of the evaluation of your Tender. If you decide to request a debriefing your written request must be made within three (3) Business Days of receipt of this Notification of Intention to Award. Provide the contract name, reference number, name of the Tenderer, contact details; and address the request for debriefing as follows:

Attention: ……[*insert full name of person, if applicable*] **Title/position**: ……*[insert title/position*]

Procuring Entity:……[*insert name of Procuring Entity*] **Email address**:……..... [*insert email address*]

If your request for a debriefing is received within the 3 Business Days deadline, we will provide the debriefing within five (5) Business Days of receipt of your request. If we are unable to provide the debriefing within this period, the Standstill Period shall be extended by five (5) Business Days after the date that the debriefing is provided. If this happens, we will notify you and confirm the date that the extended Standstill Period will end. The debriefing may be in writing, by phone, video conference call or in person. We shall promptly advise you in writing how the debriefing will take place and confirm the date and time.

If the deadline to request a debriefing has expired, you may still request a debriefing. In this case, we will provide the debriefing as soon as practicable, and normally no later than fifteen (15) Business Days from the date of publication of the Contract Award Notice.

2. How to make a complaint?

Period: Procurement-related Complaint challenging the decision to award shall be submitted by midnight……. [*insert date*] (local time).

Provide the contract name, reference number, name of the Tenderer, contact details; and address the Procurement-related Complaint as follows:

Attention:…… [*insert full name of person, if applicable*]

Title/Position:……. [*insert title/position*]

Entity:……... [*insert name of Procuring Entity*]

Address:…… [*insert email address*]

At this point in the procurement process, you may submit a Procurement-related Complaint challenging the decision to award the contract. You do not need to have requested, or received, a debriefing before making this complaint. Your complaint must be submitted within the Standstill Period and received by us before the Standstill Period ends.

In summary, there are four essential requirements:

a) You must be an 'interested party'. In this case, that means a Tenderer who submitted a Tender in this tendering process, and is the recipient of a Notification of Intention to Award.

b) The complaint can only challenge the decision to award the contract.

c) You must submit the complaint within the period stated above.

d) You must include, in your complaint, all of the information necessary to support your case.

e) The application must be accompanied by the fees set out in the Procurement Regulations, which shall not be refundable (information available from the Public Procurement Authority at www.ppoa.go.ke.

3. Standstill Period

a) **DEADLINE:** The Standstill Period is due to end at midnight on [*insert date*] (local time).

   i) The Standstill Period lasts ten (14) Days after the date of transmission of this Notification of Intention to Award.

(ii) The Standstill Period may be extended as stated in Section 4 above.

If you have any questions regarding this Notification please do not hesitate to contact

us. On behalf of the Procuring Entity:

Name_____

Title and Position_____

_____

Signature_____

Date_____

FORM NO. 2 - NOTIFICATION OF AWARD

61. Letter of Acceptance

[letter head paper of the Procuring Entity]

[date]

62. FORMAT

To: *[name and address of the Contractor]*

This is to notify you that your Tender dated *[date]* for execution of the *[name of the Contract and identification number, as given in the **SCC**]* for the Accepted Contract Amount *[amount in numbers and words] [name of currency]*, as corrected and modified in accordance with the Instructions to Tenderers, is hereby accepted by our Agency.

You are requested to furnish the Performance Security within 30 days in accordance with the Conditions of Contract, using, for that purpose, one of the Performance Security Forms included in Section X, Contract Forms, of the tender document.

We attach a copy of the Contact for your

Authorized Signature:

Name and Title of

Signatory: Name of

Agency:

63. Attachment: Contract Agreement

FORM NO. 3 – CONTRACT AGREEMENT

THIS AGREEMENT made the _____ day of _____, _____, between _____of _____ (hereinafter "the Procuring Entity"), of the one part, and_____of_____(herein after "the Contractor"), of the other part:

WHEREAS the Procuring Entity desires that the Worksknownas_____should be executed by the Contractor, and has accepted a Tender by the Contractor for the execution and completion of these Works and the remedying of any defects therein, The Procuring Entity and the Contractor agree as follows:

1. In this Agreement words and expressions shall have the same meanings as are respectively assigned to them in the Contract documents referred to.

2. The following documents shall be deemed to form and be read and construed as part of this Agreement. This Agreement shall prevail over all other Contract documents.

   a) The Letter of Acceptance
   b) The Letter of Tender
   c) The addenda Nos_____(if any)
   d) The Particular Conditions
   e) The General Conditions;
   f) The Specification
   g) The Drawings*;* and
   h) The completed Schedules and any other documents forming part of the contract.

3. In consideration of the payments to be made by the Procuring Entity to the Contractor as specified in this Agreement, the Contractor hereby covenants with the Procuring Entity to execute the Works and to remedy defects therein in conformity in all respects with the provisions of the Contract.

4. The Procuring Entity hereby covenants to pay the Contractor in consideration of the execution and completion of the Works and the remedying of defects therein, the Contract Price or such other sum as may become payable under the provisions of the Contract at the times and in the manner prescribed by the Contract.

   IN WITNESS whereof the parties hereto have caused this Agreement to be executed in accordance with the laws of Kenya on the day, month and year specified above.

Signedby_____

_____(for the Procuring Entity)

Signedby_____

_____(for the Contractor)

FORM NO. 4 - PERFORMANCE SECURITY

64. – (Unconditional Demand Bank Guarantee)

[Guarantor letterhead or SWIFT identifier code]

Beneficiary: *[insert name and Address of* Procuring Entity*]* **Date:** *[Insert date of issue]*

65. PERFORMANCE GUARANTEE No.:

Guarantor: *[Insert name and address of place of issue, unless indicated in the letterhead]*

1. We have been informed that (herein after called "the Applicant") has entered into Contract No. *dated* with the Beneficiary, for the execution of (herein after called "the Contract").

2. Further more, we understand that, according to the conditions of the Contract, a performance guarantee is required.

3. At the request of the Applicant, we as Guarantor, here by irrevocably undertake to pay the Beneficiary any sum or sums not exceeding in total an amount of( ),[1] such sum being payable in the types and proportions of currencies in which the Contract Price is payable, upon receipt by us of the Beneficiary's complying demand supported by the Beneficiary's statement, whether in the demand itself or in a separate signed document accompanying or identifying the demand, stating that the Applicant is in breach of its obligation(s) under the Contract, without the Beneficiary needing to prove or to show grounds for your demand or the sum specified therein.

4. This guarantee shall expire, no later than the …..... Day of …..... 2…[2], and any demand for payment under it must be received by us at this office indicated above on or before that date.

5. The Guarantor agrees to a one-time extension of this guarantee for a period not to exceed *[six months] [one year]*, in response to the Beneficiary's written request for such extension, such request to be presented to the Guarantor before the expiry of the guarantee."

_____

_____

[Name of Authorized Official, signature(s) and seals/stamps]

Note: Allitalicized text (including footnotes) is for use in preparing this form and shall be deleted from the final product.

---

[1] *The Guarantor shall insert an amount representing the percentage of the Accepted Contract Amount specified in the Letter of Acceptance, less provisional sums, if any, and denominated either in the currency(cies) of the Contract or a freely convertible currency acceptable to the Beneficiary.*

[2] *Insert the date twenty-eight days after the expected completion date as described in GC Clause 11.9. The Procuring Entity should note that in the event of an extension of this date for completion of the Contract, the Procuring Entity would need to request an extension of this guarantee from the Guarantor. Such request must be in writing and must be made prior to the expiration date established in the guarantee. In preparing this guarantee, the Procuring Entity might consider adding the following text to the form, at the end of the pen ultimate paragraph: "The Guarantor agrees to a one-time extension of this guarantee for a period not to exceed [six months] [one year], in response to the Beneficiary's written request for such extension, such request to be presented to the Guarantor before the expiry of the guarantee."*

66. FORM No. 5 - PERFORMANCE SECURITY OPTION 2– (Performance Bond)

*[**Note:** Procuring Entities are advised to use Performance Security–Unconditional Demand Bank Guarantee instead of Performance Bond due to difficulties involved in calling Bond holder to action]*

[Guarantor letterhead or SWIFT identifier code]

Beneficiary: _____ *[insert name and Address of* Procuring

Entity*]* **Date:** _____ *[Insert date of issue]* **PERFORMANCE**

BOND No.: _____

Guarantor: [*Insert name and address of place of issue, unless indicated in the letter head]*

1. By this Bond _____ as Principal (hereinafter called "the Contractor") and _____] as Surety (hereinafter called "the Surety"), are held and firmly bound unto _____] as Obligee (hereinafter called "the Procuring Entity") in theamountof _____ for the payment of which sum well and truly to be made in the types and proportions of currencies in which the Contract Price is payable, the Contractor and the Surety bind themselves, their heirs, executors, administrators, successors and assigns, jointly ands everally, firmly by these presents.

2 WHEREAS the Contractor has entered into a written Agreement with the Procuring Entity dated the day of, 20_____, for _____ in accordance with the documents, plans, specifications, and amendments thereto, which to the extent here in provided for, are by reference made part hereof and are herein after referred to as the Contract.

3 NOW, THEREFORE, the Condition of this Obligation is such that, if the Contractor shall promptly and faithfully perform the said Contract (including any amendments thereto), then this obligation shall be null and void; otherwise, it shall remain in full force and effect. Whenever the Contractor shall be, and declared by the Procuring Entity to be, in default under the Contract, the Procuring Entity having performed the Procuring Entity's obligations there under, the Surety may promptly remedy the default, or shall promptly:

   1) Complete the Contract in accordance with its terms and conditions; or

   2) Obtain a tender or tenders from qualified tenderers for submission to the Procuring Entity for completing the Contract in accordance with its terms and conditions, and upon determination by the Procuring Entity and the Surety of the lowest responsive Tenderers, arrange for a Contract between such Tenderer, and Procuring Entity and make available as work progresses (even though there should be a default or a succession of defaults under the Contract or Contracts of completion arranged under this paragraph) sufficient funds to pay the cost of completion less the Balance of the Contract Price; but not exceeding, including other costs and damages for which the Surety may be liable hereunder, the amount set forth in the first paragraph hereof. The term "Balance of the Contract Price," as used in this paragraph, shall mean the total amount payable by Procuring Entity to Contractor under the Contract, less the amount properly paid by Procuring Entity to Contractor; or

   3) Pay the Procuring Entity the amount required by Procuring Entity to complete the Contract in accordance with its terms and conditions upto a total not exceeding the amount of this Bond.

4 The Surety shall not be liable for a greater sum than the specified penalty of this Bond.

5 Any suit under this Bond must be instituted before the expiration of one year from the date of the issuing of the Taking-Over Certificate. No right of action shall accrue on this Bond to or for the use of any person or corporation other than the Procuring Entity named here in or the heirs, executors, administrators, successors, and assigns of the Procuring Entity.

6 In testimony where of, the Contractor has here unto set his hand and affixed his seal, and the Surety has caused these presents to be sealed with his corporate seal duly attested by the signature of his legal representative, this day
_____of_____20_____.

SIGNED ON_____on behalf of_____

By_____in the capacity of_____

In the presence of

SIGNED ON_____on behalf of_____

By_____in the capacity of_____

In the presence of

FORM NO. 6 - ADVANCE PAYMENT SECURITY

[Demand Bank Guarantee] *[Guarantor letterhead or SWIFT identifier*

code] [Guarantor letterhead o rSWIFT identifier code]

Beneficiary: ……

[Insert name and Address of Procuring Entity*]*

Date:_____*[Insert date of issue]*

ADVANCE PAYMENT GUARANTEE No.: *[Insert guarantee reference number]*

Guarantor: [*Insert name and address of place of issue, unless indicated in the letterhead]*

1. We have been informed that_____(herein after called "the Applicant") has entered into Contract No._____*dated*_____with the Beneficiary, for the execution of _____ (herein after called" the Contract").

2. Furthermore, we understand that, according to the conditions of the Contract, an advance payment in the sum of (……) is to be made against an advance payment guarantee.

3. At the request of the Applicant, we as Guarantor, hereby irrevocably undertake to pay the Beneficiary any sum or sums not exceeding in total an amount of (……) upon receipt by us of the Beneficiary's complying demand supported by the Beneficiary's statement, whether in the demand itself or in a separate signed document accompanying or identifying the demand, stating either that the Applicant:
   a) Has used the advance payment for purposes other than the costs of mobilization in respect of th eWorks; or
   b) has failed to repay the advance payment in accordance with the Contract conditions, specifying the amount which the Applicant has failed to repay.

4. A demand under this guarantee may be presented as from the presentation to the Guarantor of a certificate from the Beneficiary's bank stating that the advance payment referred to above has been credited to the Applicant on its account number_____at_____

5. The maximum amount of this guarantee shall be progressively reduced by the amount of the advance payment repaid by the Applicant as specified in copies of interim statements or payment certificates which shall be presented to us. This guarantee shall expire, at the latest, upon our receipt of a copy of the interim payment certificate indicating that ninety (90) percent of the Accepted Contract Amount, less provisional sums, has been certified for payment, or on the_____dayof_____,2_____,[2] whichever is earlier. Consequently, any demand for payment under this guarantee must be received by us at this office on or before that date.

6. The Guarantor agrees to a one-time extension of this guarantee for a period not to exceed *[six months] [one year]*, in response to the Beneficiary's written request for such extension, such request to be presented to the Guarantor before the expiry of the guarantee.

[Name of Authorized Official, signature(s) and seals/stamps]

Note: All italicized text (including footnotes) is for use in preparing this form and shall be deleted from the final product.

---

[1] *The Guarantor shall insert an amount representing the amount of the advance payment and denominated either in the currency(ies) of the advance payment as specified in the Contract, or in a freely convertible currency acceptable to the Procuring Entity.*

[2] *Insert the expected expiration date of the Time for Completion. The Procuring Entity should note that in the event of an extension of the time for completion of the Contract, the Procuring Entity would need to request an extension of this guarantee from the Guarantor. Such request must be in writing and must be made*

prior to the expiration date established in the guarantee. In preparing this guarantee, the Procuring Entity might consider adding the following text to the form, at the end of the penultimate paragraph: "The Guarantor agrees to a one-time extension of this guarantee for a period not to exceed [six months] [one year], in response to the Beneficiary's written request for such extension, such request to be presented to the Guarantor before the expiry of the guarantee."

FORM NO. 7 - RETENTION MONEY SECURITY

67. [Demand Bank Guarantee]

[Guarantor letterhead]

Beneficiary: _____*[Insert name and Address of* Procuring Entity*]* **Date:** _____*[Insert date of issue]*

68. ADVANCE PAYMENT GUARANTEE No.:___

[Insert guarantee reference number]

Guarantor: *[Insert name and address of place of issue, unless indicated in the letterhead]*

1. We have been informed that_____*[insert name of Contractor, which in the case of a joint venture shall be the name of the joint venture]* (herein afte rcalled" the Contractor") has entered into Contract No. _____*[insert reference number of the contract]* dated_____with the Beneficiary, for the execution of_____*[insert name of contract and brief description of* Works*]* (herein after called" the Contract").

2. Furthermore, we understand that, according to the conditions of the Contract, the Beneficiary retains moneys upto the limit set forth in the Contract ("the Retention Money"), and that when the Taking-Over Certificate has been issued under the Contract and the first half of the Retention Money has been certified for payment, and payment of *[*insert the second half of the Retention Money] is to be made against a Retention Money guarantee.

3. At the request of the Contractor, we, as Guarantor, hereby irrevocably undertake to pay the Beneficiary any sum or sums not exceeding in total an amount of *[insert amount in figures]……[insert amount in words]*…… ……[1] upon receipt by us of the Beneficiary's complying demand supported by the Beneficiary's statement, whether in the demand itself or in a separate signed document accompanying or identifying the demand, stating that the Contractor is in breach of its obligation(s) under the Contract, without your needing to prove or show grounds for your demand or the sum specified therein.

4. A demand under this guarantee may be presented as from the presentation to the Guarantor of a certificate from the Beneficiary's bank stating that the second half of the Retention Money as referred to above has been credited to the Contractor on its account number.....at…….*[insert name and address of Applicant's bank]*.

5. This guarantee shall expire no later than the……. Day of……..…, 2…[2], and any demand for payment under it must be received by us at the office indicated above on or before that date.

6. The Guarantor agrees to a one-time extension of this guarantee for a period not to exceed *[six months] [one year]*, in response to the Beneficiary's written request for such extension, such request to be presented to the Guarantor before the expiry of the guarantee.

_____

[Name of Authorized Official, signature(s) and seals/stamps]

Note: All italicized text (including foot notes) is for use in preparing this form and shall be deleted from the final product.

[1] *The Guarantor shall insert an amount representing the amount of the second half of the Retention Money.*

[2] *Insert a date that is twenty-eigh tdays after the expiry of retention period after the actual completion date of the contract. The Procuring Entity should note that in the event of an extension of this date for completion of the Contract, the Procuring Entity would need to request an extension of this guarantee from the*

Guarantor. Such request must be in writing and must be made prior to the expiration date established in the guarantee.

APPENDIX