KENYA RURAL ROADS AUTHORITY

VIHIGA REGION

TENDER FOR ROUTINE MAINTENANCE AND SPOT IMPROVEMENT OF BUKUNGA-MAGADA ROAD

TENDER NUMBER: KeRRA/VHG/VHG/10%/008/039/055/2021-2022

FUNDING:10 % RLMF

NOVEMBER 2021

BIDDERS ARE NOTIFIED THAT THIS TENDER IS PREPARED UNDER THE NEW PUBLIC PROCUREMENT REGULATORY AUTHORITY CONDITIONS AND FORMAT

REGIONAL DIRECTOR VIHIGA REGION KENYA RURAL ROADS AUTHORITY P. O. 1251 -50300 MARAGOLI	DIRECTOR GENERAL KENYA RURAL ROADS AUTHORITY P. O. BOX 48151-00100 NAIROBI

Contents

SECTION I: INVITATION TO TENDER **7**
Further information and tender documents can be obtained from 7
PART 1 TENDERING PROCEDURES **8**
SECTION II - INSTRUCTIONS TO TENDERERS 9
1. Scope of Tender 9
2. Fraud and Corruption 9
3. Eligible Tenderers 9
4. Eligible Goods, Equipment, and Services 11
5. Tenderer's Responsibilities 11
PART3: Conditions of Contract and Contract Forms 12
7. Clarification of Tender Document, Site Visit, Pre-Tender Meeting 12
8. Amendment of Tender Documents 13
10. Language of Tender 13
11. Documents Comprising the Tender 14
12. Form of Tender and Schedules 14
13. Alternative Tenders 14
14. Tender Prices and Discounts 15
15. Currencies of Tender and Payment 15
16. Documents Comprising the Technical Proposal 16
17. Documents Establishing the Eligibility and Qualifications of the Tenderer 16
18. Period of Validity of Tenders 17
19. Tender Security 17
20. Format and Signing of Tender 18
D. SUBMISSION AND OPENING OF TENDERS 18
22. Deadline for Submission of Tenders 19
23. Late Tenders 19
24. Withdrawal, Substitution, and Modification of Tenders 19
25. Tender Opening 20
E. Evaluation and Comparison of Tenders 20
27. Clarification of Tenders 21
28. Deviations, Reservations, and Omissions 21
29. Determination of Responsiveness 21
30. Non-material Non-conformities 21
31. Arithmetical Errors 22
32. Conversion to Single Currency 22
33. Margin of Preference and Reservations 22
34. Nominated Subcontractors 22
35. Evaluation of Tenders 23
36. Comparison of Tenders 23
37. Abnormally Low Tenders and Abnormally HighTenders Abnormally Low Tenders 23
Abnormally High Tenders 24
38. Unbalanced and/or Front-Loaded Tenders 24
39. Qualifications of the Tenderer 24

40. Lowest Evaluated Tender 25
41. Procuring Entity's Right to Accept Any Tender, and to Reject Any or All Tenders. 25
43. Notice of Intention to enter into a Contract 25
44. Stand still Period 25
45. Debriefing by the Procuring Entity 25
46. Letter of Award 26
47. Signing of Contract 26
48. Performance Security 26
49. Publication of Procurement Contract 26
50. Procurement Related Complaint 26
SECTION III - TENDER DATA SHEET (TDS) 27
SECTION IV- EVALUATION AND QUALIFICATION CRITERIA 31
1 General Provisions 31
2. Preliminary examination for Determination of Responsiveness 31
3. Tender Evaluation (ITT 35) 31
4. Multiple Contracts 31
5. Alternative Tenders (ITT 13.1) 32
6. Margin of Preference 32
7. Post qualification and Contract award (ITT 39), more specifically, ... 33
c) **History of non-performing contracts**: 33
d) Pending Litigation 33
e) Litigation History 33
QUALIFICATION FORM 36
APPENDIX TO THE QUALIFICATION CRITERIA 46
SECTION V - TENDERING FORMS 49
QUALIFICATION FORMS 49
1. FORM EQU: EQUIPMENT 49
2. FORM PER -1 50
Contractor's Representative and Key Personnel Schedule 50
Contractor' Representative and Key Personnel 50
Declaration 52
4. TENDERERS QUALIFICATION WITHOUT PRE-QUALIFICATION 53
FORM ELI -1.1 Tenderer Information Form 53
FORM CON - 2 55
Historical Contract Non-Performance, ... 55
5. 59: FORM FIN – 3.1 57
Financial Situation and Performance 57
Sources of Finance 57
5.5 FORM FIN – 3.2 58
Average Annual Construction Turnover 58
5. 61 FORM FIN – 3.3: 59
Financial Resources 59

5.7 FORM FIN – 3.4: 59
Current Contract Commitments / Works in Progress 59
5.8 FORM EXP - 4.1 60
General Construction Experience 60
5.9 FORM EXP - 4.2(a) 61
Specific Construction and Contract Management Experience 61
10.1 FORM EXP - 4.2(b) 62
Construction Experience in Key Activities 62
OTHER FORMS 63
6. FORM OF TENDER 63
A. TENDERER'S ELIGIBILITY - CONFIDENTIAL BUSINESS QUESTIONNAIRE 66
Instruction to Tenderer 66
(a) ***Tenderer's details*** 66
(e) DISCLOSURE OF INTEREST - Interest of the Firm in the Procuring Entity. 68
ii) Conflict of interest disclosure 69
B. CERTIFICATE OF INDEPENDENT TENDER DETERMINATION 70
C. SELF - DECLARATION FORMS 71
D. APPENDIX 1 - FRAUD AND CORRUPTION 74
FORM OF TENDER SECURITY (TENDER BOND) 76
TENDER-SECURING DECLARATION FORM 77
Appendix to Tender 78
Schedule of Currency requirements 78
TECHNICAL PROPOSAL 78
Site Organization 78
Method Statement 78
Mobilization Schedule 78
Construction Schedule 78
PART 2 - WORKS' REQUIREMENTS 79
PART II - WORK REQUIREMENTS 80
SECTION V - DRAWINGS 80
SECTION VI - SPECIFICATIONS 80
SECTION VII- BILLS OF QUANTITIES 121
1. Objectives 121
2. Day work Schedule 121
3. Provisional Sums 121
4. The Bills of Quantities 121
SECTION V - BILLS OF QUANTITIES 122
PART III - CONDITIONS OF CONTRACT AND CONTRACT FORMS 131
SECTION VIII - GENERAL CONDITIONS OF CONTRACT 132
General Conditions of Contract 132

A. General....132
1. Definitions....132
2. Interpretation....133
3. Language and Law....134
4. Project Manager's Decisions....134
5. Delegation....134
6. Communications....134
7. Subcontracting....134
8. Other Contractors....134
9. Personnel and Equipment....134
10. Procuring Entity's and Contractor's Risks....134
11. Procuring Entity's Risks....135
12. Contractor's Risks....135
13. Insurance....135
14. Site Data....135
15. Contractor to Construct the Works....135
16. The Works to Be Completed by the Intended Completion Date....136
17. Approval by the Project Manager....136
18. Safety....136
19. Discoveries....136
20. Possession of the Site....136
21. Access to the Site....136
22. Instructions, Inspections and Audits....136
23. Appointment of the Adjudicator....137
24. Settlement of Claims and Disputes....137
Amicable Settlement....138
Matters that may be referred to arbitration....138
Arbitration....138
Arbitration with National Contractors....139
Alternative Arbitration Proceedings....139
Failure to Comply with Arbitrator's Decision....139
Contract operations to continue....139
25. Fraud and Corruption....139
B. Time Control....140
1. Program....140
E. Finishing the Contract....148
SECTION IX - SPECIAL CONDITIONS OF CONTRACT....150

FORM No 1: NOTIFICATION OF INTENTION TO AWARD 153
Signature: Name: Title/position: Telephone: Email: 154
FORM NO 3: CONTRACT AGREEMENT 157
FORM NO. 4 - PERFORMANCE SECURITY 158
[Option 1 - Unconditional Demand Bank Guarantee] 158
FORM No. 5 - PERFORMANCE SECURITY 159
[Option 2– Performance Bond] 159
PERFORMANCE BOND No.: 159
FORM NO. 6 - ADVANCE PAYMENT SECURITY 161
FORM NO. 7 - RETENTION MONEY SECURITY 162
[Demand Bank Guarantee] 162

SECTION I: INVITATION TO TENDER

VIHIGA REGION
Kenya Rural Roads Authority,
P.O. Box 1251-50300,
MARAGOLI.
Regional Email address: vihiga@kerra.go.ke
TENDER No. KeRRA/VHG/VHG/10%/008/039/055/2021-2022

For *Routine Maintenance of* **Bukunga-Magada** Road

The Authority invites bids from eligible bidders for the *routine maintenance of* **Bukunga-Magada** during 2020/2021 financial year at Vihiga County.

1. The tender is open to all qualified and interested Tenderers (*KeRRA Vihiga Registered Contractors FY2021-2022 in Vihiga Constituency)*

2. Bidders can participate in several tenders, however, a bidder shall not participate in the same tender individually and also as a Joint Venture.

3. Qualified and interested tenderers may obtain further information and inspect the Tender Documents at KeRRA Regional Offices during office hours [*0900to 1500 hours]* at the address given below.

4. A complete set of tender documents may be purchased or obtained by interested tenders upon payment of a non-refundable fees of KShs. 1000/= Banker's Cheque and payable to the address given below:

   VIHIGA REGION
   Kenya Rural Roads Authority,
   P.O. Box 1251-50300,
   MARAGOLI.

5. Tender documents may be obtained electronically from www.kerra.go.ke or www.tenders.go.ke. Tender documents obtained electronically will be free of charge.

6. Tender documents may be viewed and downloaded for free from the website www.kerra.go.ke or www.tenders.go.ke. Tenderers who download the tender document must forward their particulars immediately to *vihiga@kerra.go.ke* to facilitate any further clarification or addendum.

7. Tenders shall be quoted be in Kenya Shillings and shall include all taxes. Tenders shall remain valid for 140 days from the date of opening of tenders.

8. All Tenders must be accompanied by a *[insert "tender Security" or "Tender-Securing Declaration," as appropriate]* of *[insert amount and currency in case of a tender Security.] NOT APPLICABLE*

9. The Tenderer MUST chronologically serialize all pages of the tender documents submitted in the order of 1, 2,3,4,……

10. Completed tenders must be delivered to the address below so as to be received on or before 19TH November, 2021 at 9:30 AM. Bids submitted after this prescribed time shall be rejected. The opening of bids will take place immediately thereafter after in the presence of the selected few bidders' representative selected on first –come-First selected basis

11. The address referred to above are: Further information and tender documents can be obtained from

Further information and tender documents can be obtained from

VIHIGA REGION
Kenya Rural Roads Authority,
P.O. Box 1251-50300,
MARAGOLI.
Regional Email address: vihiga@kerra.go.ke

REGIONAL DIRECTOR
VIHIGA REGION
KENYA RURAL ROADS AUTHORITY

PART 1 TENDERING PROCEDURES

SECTION II - INSTRUCTIONS TO TENDERERS

A. GENERAL PROVISIONS

1. Scope of Tender

The Procuring Entity as defined in the Appendix to Conditions of Contract invites tenders for Works Contract as described in the tender documents. The name, identification, and number of lots (contracts) of this Tender Document are **specified in the TDS.**

2. Fraud and Corruption

2.1 The Procuring Entity requires compliance with the provisions of the Public Procurement and Asset Disposal Act, 2015, Section 62 "Declaration not to engage in corruption". The tender submitted by a person shall include a declaration that the person shall not engage in any corrupt or fraudulent practice and a declaration that the person or his or her sub-contractors are not debarred from participating in public procurement proceedings.

2.2 The Procuring Entity requires compliance with the provisions of the Competition Act 2010, regarding collusive practices in contracting. Any tenderer found to have engaged in collusive conduct shall be disqualified and criminal and/or civil sanctions may be imposed. To this effect, Tenders shall be required to complete and sign the "Certificate of Independent Tender Determination" annexed to the Form of Tender.

2.3 Tenderers shall permit and shall cause their agents (where declared or not), subcontractors, sub-consultants, service providers, suppliers, and their personnel, to permit the Procuring Entity to inspect all accounts, records and other documents relating to any initial selection process, pre-qualification process, tender submission, proposal submission, and contract performance (in the case of award), and to have them audited by auditors appointed by the Procuring Entity.

2.4 Unfair Competitive Advantage -Fairness and transparency in the tender process require that the firms or their Affiliates competing for a specific assignment do not derive a competitive advantage from having provided consulting services related to this tender. To that end, the Procuring Entity shall indicate in the **Data Sheet** and make available to all the firms together with this tender document all information that would in that respect give such firm any unfair competitive advantage over competing firms.

3. Eligible Tenderers

3.1 A Tenderer may be a firm that is a private entity, a state-owned enterprise or institution subject to ITT 3.8, or an individual or any combination of such entities in the form of a joint venture (JV) under an existing agreement or with the intent to enter into such an agreement supported by a letter of intent. In the case of a joint venture, all members shall be jointly and severally liable for the execution of the entire Contract in accordance with the Contract terms. The JV shall nominate a Representative who shall have the authority to conduct all business for and on behalf of any and all the members of the JV during the tendering process and, in the event the JV is awarded the Contract, during contract execution. Members of a joint venture may not also make an individual tender, be a subcontractor in a separate tender or be part of another joint venture for the purposes of the same Tender. The maximum number of JV members shall be specified in the **TDS.**

3.2 Public Officers of the Procuring Entity, their Spouses, Child, Parent, Brothers or Sister. Child, Parent, Brother or Sister of a Spouse, their business associates or agents and firms/organizations in which they have a substantial or controlling interest shall not be eligible to tender or be awarded a contract. Public Officers are also not allowed to participate in any procurement proceedings.

3.3 A Tenderer shall not have a conflict of interest. Any tenderer found to have a conflict of interest shall be disqualified. A tenderer may be considered to have a conflict of interest for the purpose of this tendering process, if the tenderer:

a) Directly or indirectly controls, is controlled by or is under common control with another tenderer; or

b) Receives or has received any direct or indirect subsidy from another tenderer; or

c) Has the same legal representative as another tenderer; or

d) Has a relationship with another tenderer, directly or through common third parties, that puts it in a position to influence the tender of another tenderer, or influence the decisions of the Procuring Entity regarding this tendering process; or

e) Any of its affiliates participated as a consultant in the preparation of the design or technical specifications of the goods or works that are the subject of the tender; or

f) any of its affiliates has been hired (or is proposed to be hired) by the Procuring Entity as a consultant for Contract implementation; or

g) Would be providing goods, works, or non-consulting services resulting from or directly related to consulting services for the preparation or implementation of the contract specified in this Tender Document; or

h) Has a close business or personal relationship with senior management or professional staff of the Procuring Entity who has the ability to influence the bidding process and:

   i) are directly or indirectly involved in the preparation of the Tender document or specifications of the Contract, and/or the Tender evaluation process of such contract; or

   ii) May be involved in the implementation or supervision of such Contract unless the conflict stemming from such relationship has been resolved in a manner acceptable to the Procuring Entity throughout the tendering process and execution of the Contract.

3.4 A tenderer shall not be involved incorrupt, coercive, obstructive or fraudulent practice. A tenderer that is proven to have been involved in any of these practices shall be automatically disqualified.

3.5 A Tenderer (either individually or as a JV member) shall not participate in more than one Tender, except for permitted alternative tenders. This includes participation as a subcontractor in other Tenders. Such participation shall result in the disqualification of all Tenders in which the firm is involved. Members of a joint venture may not also make an individual tender, be a subcontractor in a separate tender or be part of another joint venture for the purposes of the same Tender. A firm that is not a tenderer or a JV member may participate as a subcontractor in more than one tender.

3.6 A Tenderer may have the nationality of any country, subject to the restrictions pursuant to ITT3.9. A Tenderer shall be deemed to have the nationality of a country if the Tenderer is constituted, incorporated or registered in and operates in conformity with the provisions of the laws of that country, as evidenced by its articles of incorporation (or equivalent documents of constitution or association) and its registration documents, as the case may be. This criterion also shall apply to the determination of the nationality of proposed subcontractors or sub-consultants for any part of the Contract includingrelated Services.

3.7 A Tenderer that has been debarred from participating in public procurement shall be ineligible to tender or be awarded a contract. The list of debarred firms and individuals is available from the website of PPRA www.ppra.go.ke.

3.8 A Tenderer that is a state-owned enterprise or a public institution in Kenya may be eligible to tender and be awarded a Contract(s) only if it is determined by the Procuring Entity to meet the following conditions, i.e. if it is:

i) A legal public entity of Government and/or public administration,

ii) financially autonomous and not receiving any significant subsidies or budget support from any public entity or Government, and

iii) Operating under commercial law and vested with legal rights and liabilities similar to any commercial enterprise to enable it compete with firms in the private sector on an equal basis.

3.9 Firms and individuals shall be ineligible if their countries of origin are:

a) as a matter of law or official regulations, Kenya prohibits commercial relations with that country, or

b) by an act of compliance with a decision of the United Nations Security Council taken under Chapter VII of the Charter of the United Nations, Kenya prohibits any import of goods or contracting of works or services from that country, or any payments to any country, person, or entity in that country.

A tenderer shall provide such documentary evidence of eligibility satisfactory to the Procuring Entity, as the Procuring Entity shall reasonably request.

3.10 Foreign tenderers are required to source at least forty (40%) percent of their contract inputs (in supplies, local subcontracts and labor) from citizen suppliers and contractors. To this end, a foreign tenderer shall provide in its tender documentary evidence that this requirement is met. Foreign tenderers not meeting this criterion will be automatically disqualified. Information required to enable the Procuring Entity determine if this condition is met shall be provided for this purpose in *"SECTION III-EVALUATION AND QUALIFICATION CRITERIA, Item 9"*.

3.11 Pursuant to the eligibility requirements of ITT4.10, a tender is considered a foreign tenderer, if the tenderer is not registered in Kenya or if the tenderer is registered in Kenya and has less than 51 percent ownership by Kenyan citizens. JVs are considered as foreign tenderers if the individual member firms are not registered in Kenya or if are registered in Kenya and have less than 51 percent ownership by Kenyan citizens. The JV shall not subcontract to foreign firms more than 10 percent of the contract price, excluding provisional sums.

3.12 The National Construction Authority Act of Kenya requires that all local and foreign contractors be registered with the National Construction Authority and be issued with a Registration Certificate before they can undertake any construction works in Kenya. Registration shall not be a condition for tender, but it shall be a condition of contract award and signature. A selected tenderer shall be given opportunity to register before such award and signature of contract. Application for registration with National Construction Authority may be accessed from the website www.nca.go.ke.

3.13 The Competition Act of Kenya requires that firms wishing to tender as Joint Venture undertakings which may prevent, distort or lessen competition in provision of services are prohibited unless they are exempt in accordance with the provisions of Section 25 of the Competition Act, 2010. JVs will be required to seek for exemption from the Competition Authority. Exemption shall not be a condition for tender, but it shall be a condition of contract award and signature. A JV tenderer shall be given opportunity to seek such exemption as a condition of award and signature of contract. Application for exemption from the Competition Authority of Kenya may be accessed from the website www.cak.go.ke.

4.14 A Kenyan tenderer shall be eligible to tender if it provides evidence of having fulfilled his/her tax obligations by producing a valid tax compliance or valid tax certificate issued by the Kenya Revenue Authority.

4. Eligible Goods, Equipment, and Services

4.1 Goods, equipment and services to be supplied under the Contract may have their origin in any country that is not ineligible under ITT3.9. At the Procuring Entity's request, Tenderers may be required to provide evidence of the origin of Goods, equipment and services.

4.2 Any goods, works and production processes with characteristics that have been declared by the relevant national environmental protection agency or by other competent authority as harmful to human beings and to the environment shall not be eligible for procurement.

5. Tenderer's Responsibilities

5.1 The tenderer shall bear all costs associated with the preparation and submission of his/her tender, and the Procuring Entity will in no case be responsible or liable for those costs.

5.2 The tenderer, at the tenderer's own responsibility and risk, is encouraged to visit and examine and

inspect the Site of the Works and its surroundings and obtain all information that may be necessary for preparing the tender and entering into a contract for construction of the Works. The costs of visiting the Site shall be at the tenderer's own expense.

5.3 The Tenderer and any of its personnel or agents will be granted permission by the Procuring Entity to enter up on its premises and lands for the purpose of such visit. The Tenderer shall indemnify the Procuring Entity against all liability arising from death or personal injury, loss of or damage to property, and any other losses and expenses incurred as a result of the examination and inspection.

5.4 The tenderer shall provide in the Form of Tender and Qualification Information, a preliminary description of the proposed work method and schedule, including charts, as necessary or required.

B. CONTENTS OF TENDER DOCUMENTS

6. Sections of Tender Document

6.1 The tender document consists of Parts 1, 2, and 3, which includes all the sections specified below, and which should be read in conjunction with any Addenda issued in accordance with ITT10.

PART 1: **Tendering Procedures**
Section I: Instructions to Tenderers
Section II: Tender Data Sheet (TDS)
Section III: Evaluation and Qualification Criteria Section
Section IV: Tendering Forms

PART 2: **Works' Requirements**
Section V: Bills of Quantities
Section VI: Specifications Section
VII: Drawings

PART3: **Conditions of Contract and Contract Forms**
Section VIII: General Conditions (GCC)
Section IX: Particular Conditions of Contract
Section X: Contract Forms

6.2 The Invitation to Tender Notice issued by the Procuring Entity is not part of the Contract documents.

6.3 Unless obtained directly from the Procuring Entity, the Procuring Entity is not responsible for the completeness of the Tender document, responses to requests for clarification, the minutes of a pre-arranged site visit and those of the pre-Tender meeting (if any), or Addenda to the Tender document in accordance with ITT 10. In case of any contradiction, documents obtained directly from the Procuring Entity shall prevail.

6.4 The Tenderer is expected to examine all instructions, forms, terms, and specifications in the Tender Document and to furnish with its Tender all information and documentation as is required by the Tender document.

7. Clarification of Tender Document, Site Visit, Pre-Tender Meeting

7.1 Tenderer requiring any clarification of the Tender Document shall contact the Procuring Entity in writing at the Procuring Entity's address **specified in the TDS** or raise its enquiries during the pre-Tender meeting if provided for in accordance with ITT 7.2. The Procuring Entity will respond in writing to any request for clarification, provided that such request is received no later than the period

specified in the **TDS p**rior to the deadline for submission of tenders. The Procuring Entity shall forward copies of its response to all tenderers who have acquired the Tender D documents in accordance with ITT 7.4, including a description of the inquiry but without identifying its source. If so specified **in the TDS**, the Procuring Entity shall also promptly publish its response at the web page identified in the **TDS**. Should the clarification result in changes to the essential elements of the Tender Documents, the Procuring Entity shall amend the Tender Documents following the procedure under ITT 8 and ITT 22.2.

7.2 The Tenderer, at the Tenderer's own responsibility and risk, is encouraged to visit and examine and inspect the site(s) of the required contracts and obtain all information that may be necessary for preparing a tender. The costs of visiting the Site shall be at the Tenderer's own expense. The Procuring Entity shall specify in the **TDS** if a pre- arranged Site visit and or a pre-tender meeting will be held, when and where. The Tenderer's designated representative is invited to attend a pre-arranged site visit and a pre-tender meeting, as the case may be. The purpose of the site visit and the pre-tender meeting will be to clarify issues and to answer questions on any matter that may be raised at that stage.

7.3 The Tenderer is requested to submit any questions in writing, to reach the Procuring Entity not later than the period specified in the **TDS** before the meeting.

7.4 Minutes of a pre-arranged site visit and those of the pre-tender meeting, if applicable, including the text of the questions asked by Tenderers and the responses given, together with any responses prepared after the meeting, will be transmitted promptly to all Tenderers who have acquired the Tender Documents. Minutes shall not identify the source of the questions asked.

7.5 The Procuring Entity shall also promptly publish anonymized (*no names*) Minutes of the pre-arranged site visit and those of the pre-tender meeting at the web page identified **in the TDS**. Any modification to the Tender Documents that may become necessary as a result of the pre-arranged site visit and those of the pre-tender meeting shall be made by the Procuring Entity exclusively through the issue of an Addendum pursuant to ITT 8 and not through the minutes of the pre-Tender meeting. Non-attendance at the pre-arranged site visit and the pre-tender meeting will not be a cause for disqualification of a Tenderer.

8. Amendment of Tender Documents

8.1 At any time prior to the deadline for submission of Tenders, the Procuring Entity may amend the Tender Documents by issuing addenda.

8.2 Any addendum issued shall be part of the Tender Documents and shall be communicated in writing to all who have obtained the Tender Documents from the Procuring Entity. The Procuring Entity shall also promptly publish the addendum on the Procuring Entity's website in accordance with ITT 7.5.

8.3 To give Tenderers reasonable time in which to take an addendum into account in preparing their Tenders, the Procuring Entity should extend the deadline for the submission of Tenders, pursuant to ITT 22.2.

C. PREPARATION OF TENDERS

9. Cost of Tendering

The Tenderer shall meet all costs associated with the preparation and submission of its Tender, and the Procuring Entity shall not be responsible or liable for those costs, regardless of the conduct or outcome of the tendering process.

10. Language of Tender

The Tender, as well as all correspondence and documents relating to the tender exchanged by the tenderer and the Procuring Entity, shall be written in the English Language. Supporting documents and

printed literature that are part of the Tender may be in another language provided they are accompanied by an accurate and notarized translation of the relevant passages into the English Language**,** in which case, for purposes of interpretation of the Tender, such translation shall govern.

11. Documents Comprising the Tender

11.1 The Tender shall comprise the following:

a) Form of Tender prepared in accordance with ITT 12;
b) Schedules including priced Bill of Quantities, completed in accordance with ITT 12 and ITT 14;
c) Tender Security or Tender-Securing Declaration, in accordance with ITT 19.1;
d) Alternative Tender, if permissible, in accordance with ITT 13;
e) Authorization: written confirmation authorizing the signatory of the Tender to commit the Tenderer, in accordance with ITT 20.3;
f) Qualifications: documentary evidence in accordance with ITT 17 establishing the Tenderer's qualifications to perform the Contract if its Tender is accepted;
g) Conformity: a technical proposal in accordance with ITT 16;
h) Any other document required in the TDS.

11.2 In addition to the requirements under ITT 11.1, Tenders submitted by a JV shall include a copy of the Joint Venture Agreement entered into by all members. Alternatively, a letter of intent to execute a Joint Venture Agreement in the event of a successful Tender shall be signed by all members and submitted with the Tender, together with a copy of the proposed JV Agreement. Change of membership and conditions of the JV prior to contract signature will render the tender liable for disqualification.

12. Form of Tender and Schedules

12.1 The Form of Tender and Schedules, including the Bill of Quantities, shall be prepared using the relevant forms furnished in Section IV, Tendering Forms. The forms must be completed without any alterations to the text, and no substitutes shall be accepted except as provided under ITT 20.3. All blank spaces shall be filled in with the information requested. The Tenderer shall chronologically serialize all pages of the tender documents submitted.

12.2 The Tenderer shall furnish in the Form of Tender information on commissions and gratuities, if any, paid or to be paid to agents or any other party relating to this Tender.

13. Alternative Tenders

13.1 Unless otherwise specified in the TDS, alternative Tenders shall not be considered.

13.2 When alternative times for completion are explicitly invited, a statement to that effect will be included in the **TDS**, and the method of evaluating different alternative times for completion will be described in Section III, Evaluation and Qualification Criteria.

13.3 Except as provided under ITT13.4 below, Tenderers wishing to offer technical alternatives to the requirements of the Tender Documents must first price the Procuring Entity's design as described in the Tender Documents and shall further provide all information necessary for a complete evaluation of the alternative by the Procuring Entity, including drawings, design calculations, technical specifications, breakdown of prices, and proposed construction methodology and other relevant details. Only the technical alternatives, if any, of the Tenderer with the Winning Tender conforming to the basic technical requirements shall be considered by the Procuring Entity.

13.4 When specified in the **TDS**, Tenderers are permitted to submit alternative technical solutions for specified parts of the Works, and such parts will be identified in the **TDS**, as will the method for their evaluating, and described in Section VII, Works' Requirements.

14. Tender Prices and Discounts

14.1 The prices and discounts (including any price reduction) quoted by the Tenderer in the Form of Tender and in the Bill of Quantities shall conform to the requirements specified below.

14.2 The Tenderer shall fill in rates and prices for all items of the Works described in the Bill of Quantities. Items against which no rate or price is entered by the Tenderer shall be deemed covered by the rates for other items in the Bill of Quantities and will not be paid for separately by the Procuring Entity. An item not listed in the priced Bill of Quantities shall be assumed to be not included in the Tender, and provided that the Tender is determined substantially responsive notwithstanding this omission, the average price of the item quoted by substantially responsive Tenderers will be added to the Tender price and the equivalent total cost of the Tender so determined will be used for price comparison.

14.3 The price to be quoted in the Form of Tender, in accordance with ITT 12, shall be the total price of the Tender, including any discounts offered.

14.4 The Tenderer shall quote any discounts and the methodology for their application in the Form of Tender, in accordance with ITT 12

14.5 It will be specified in the **TDS** if the rates and prices quoted by the Tenderer are or are not subject to adjustment during the performance of the Contract in accordance with the provisions of the Conditions of Contract, excepting cases where the contract is subject to fluctuations and adjustments, not fixed price. In such a case, the Tenderer shall furnish the indices and weightings for the price adjustment formulae in the Schedule of Adjustment Data and the Procuring Entity may require the Tenderer to justify its proposed indices and weightings.

14.6 Where tenders are being invited for individual lots (contracts) or for any combination of lots (packages), tenderers wishing to offer discounts for the award of more than one Contract shall specify in their Tender the price reductions applicable to each package, or alternatively, to individual Contracts within the package. Discounts shall be submitted in accordance with ITT 14.4, provided the Tenders for all lots (contracts) are opened at the same time.

14.7 All duties, taxes, and other levies payable by the Contractor under the Contract, or for any other cause, as of the date 30 days prior to the deadline for submission of Tenders, shall be included in the rates and prices and the total Tender Price submitted by the Tenderer.

15. Currencies of Tender and Payment

15.1 The currency (ies) of the Tender and the currency (ies) of payments shall be the same**.**

15.2 Tenderers shall quote entirely in Kenya Shillings. The unit rates and the prices shall be quoted by the Tenderer in the Bill of Quantities, entirely in Kenya shillings

a) A Tenderer expecting to incur expenditures in other currencies for inputs to the Works supplied from outside Kenya (referred to as “the foreign currency requirements”) shall (if so allowed in the **TDS**) indicate in the Appendix to Tender the percentage(s) of the Tender Price (excluding Provisional Sums), needed by the Tenderer for the payment of such foreign currency requirements, limited to no more than two foreign currencies.

b) The rates of exchange to be used by the Tenderer in arriving at the local currency equivalent and the percentage(s) mentioned in (a) above shall be specified by the Tenderer in the Appendix to Tender and shall be based on the exchange rate provided by the Central Bank of Kenya on the date 30 days prior to the actual date of tender opening. Such exchange rate shall apply for all foreign payments under the Contract.

15.3 Tenderers may be required by the Procuring Entity to justify, to the Procuring Entity's satisfaction, their local and foreign currency requirements, and to substantiate that the amounts included in the unit rates and prices and shown in the Schedule of Adjustment Data in the Appendix to Tender are

reasonable, in which case a detailed breakdown of the foreign currency requirements shall be provided by Tenderers.

16. Documents Comprising the Technical Proposal

The Tenderer shall furnish a technical proposal including a statement of work methods, equipment, personnel, schedule and any other information as stipulated in Section IV, Tender Forms, insufficient detail to demonstrate the adequacy of the Tenderer's proposal to meet the work's requirements and the completion time.

17. Documents Establishing the Eligibility and Qualifications of the Tenderer

17.1 Tenderers shall complete the Form of Tender, included in Section IV, Tender Forms, to establish Tenderer's eligibility in accordance with ITT 4.

17.2 In accordance with Section IV, Evaluation and Qualification Criteria, to establish its qualifications to perform the Contract the Tenderer shall provide the information requested in the corresponding information sheets included in Section V, Tender Forms.

17.3 If a margin of preference applies as specified in accordance with ITT33. 1, national tenderers, individually or in joint ventures, applying for eligibility for national preference shall supply all information required to satisfy the criteria for eligibility specified in accordance with ITT 33.1.

17.4 Tenderers shall be asked to provide, as part of the data for qualification, such information, including details of ownership, as shall be required to determine whether, according to the classification established by the Procuring Entity, a particular contract or group of contractors qualifies for a margin of preference. Further the information will enable the Procuring Entity identify any actual or potential conflict of interest in relation to the procurement and/or contract management processes, or possibility of collusion between tenderers, and there by help to prevent any corrupt influence in relation to the procurement process or contract management.

17.5 The purpose of the information described **in ITT 17.2** above overrides any claims to confidentiality which a tenderer may have. There can be no circumstances in which it would be justified for a tenderer to keep information relating to its ownership and control confidential where it is tendering to undertake public sector work and receive public sector funds. Thus, confidentiality will not be accepted by the Procuring Entity as a justification for a Tenderer's failure to disclose, or failure to provide required information on its ownership and control.

17.6 The Tenderer shall provide further documentary proof, information or authorizations that the Procuring Entity may request in relation to ownership and control which information on any changes to the information which was provided by the tenderer under ITT 6.4. The obligations to require this information shall continue for the duration of the procurement process and contract performance and after completion of the contract, if any change to the information previously provided may reveal a conflict of interest in relation to the award or management of the contract.

17.7 All information provided by the tenderer pursuant to these requirements must be complete, current and accurate as at the date of provision to the Procuring Entity. In submitting the information required pursuant to these requirements, the Tenderer shall warrant that the information submitted is complete, current and accurate as at the date of submission to the Procuring Entity.

17.8 If a tenderer fails to submit the information required by these requirements, its tender will be rejected. Similarly, if the Procuring Entity is unable, after taking reasonable steps, to verify to a reasonable degree the information submitted by a tenderer pursuant to these requirements, then the tender will be rejected.

17.9 If information submitted by a tenderer pursuant to these requirements, or obtained by the Procuring Entity (whether through its own enquiries, through notification by the public or otherwise), shows any conflict of interest which could materially and improperly benefit the tenderer in relation to the procurement or contract management process, then:

i) If the procurement process is still on going, the tenderer will be disqualified from the procurement process,

ii) If the contract has been awarded to that tenderer, the contract award will be set aside,
iii) the tenderer will be referred to the relevant law enforcement authorities for investigation of whether the tenderer or any other persons have committed any criminal offence.

17.10 If a tenderer submits information pursuant to these requirements that is incomplete, inaccurate or out-of-date, or attempts to obstruct the verification process, then the consequences ITT 17.8 will ensue unless the tenderer can show to the reasonable satisfaction of the Procuring Entity that any such act was not material, or was due to genuine error which was not attributable to the intentional act, negligence or recklessness of the tender.

18. Period of Validity of Tenders

18.1. Tenders shall remain valid for the Tender Validity period specified in the **TDS**. The Tender Validity period starts from the date fixed for the Tender submission deadline (as prescribed by the Procuring Entity in accordance with ITT 22). A Tender valid for a shorter period shall be rejected by the Procuring Entity as non-responsive.

18.2 In exceptional circumstances, prior to the expiration of the Tender validity period, the Procuring Entity may request Tenderers to extend the period of validity of their Tenders. The request and the responses shall be made in writing. If a Tender Security is requested in accordance with ITT 19, it shall also be extended for thirty (30) days beyond the deadline of the extended validity period. A Tenderer may refuse the request without forfeiting its Tender security. A Tenderer granting their quest shall not be required or permitted to modify its Tender.

19. Tender Security

19.1 The Tenderer shall furnish as part of its Tender, either a Tender-Securing Declaration or a Tender Security as specified in the **TDS**, in original form and, in the case of a Tender Security, in the amount and currency **specified in the TDS**. A Tender-Securing Declaration shall use the form included in Section IV, Tender Forms.

19.2 If a Tender Security is specified pursuant to ITT19.1, the Tender Security shall be a demand guarantee in any of the following forms at the Tenderer's option:
i) cash;
ii) a bank guarantee;
iii) a guarantee by an insurance company registered and licensed by the Insurance Regulatory Authority listed by the Authority; or
iv) a guarantee issued by a financial institution approved and licensed by the Central Bank of Kenya, from a reputable source, and an eligible country.

19.3 If an unconditional bank guarantee is issued by a bank located outside Kenya, the issuing bank shall have a correspondent bank located in Kenya to make it enforceable. The Tender Security shall be valid for thirty (30) days beyond the original validity period of the Tender, or beyond any period of extension if requested under ITT 18.2.

19.4 If a Tender Security or Tender-Securing Declaration is specified pursuant to ITT 19.1, any Tender not accompanied by a substantially responsive Tender Security or Tender-Securing Declaration shall be rejected by the Procuring Entity as non-responsive.

19.5 If a Tender Security is specified pursuant to ITT 19.1, the Tender Security of unsuccessful Tenderers shall be returned as promptly as possible upon the successful Tenderer's signing the Contract and furnishing the Performance Security and any other documents required in the TDS. The Procuring Entity shall also promptly return the tender security to the tenderers where the procurement proceedings are terminated, all tenders were determined non-responsive or a bidder declines to extend tender validity period.

19.6 The Tender Security of the successful Tenderer shall be returned as promptly as possible once the successful Tenderer has signed the Contract and furnished the required Performance Security, and

any other documents required in the TDS.

19.7 The Tender Security may be forfeited, or the Tender-Securing Declaration executed:

a) if a Tenderer withdraws its Tender during the period of Tender validity specified by the Tenderer on the Form of Tender, or any extension there to provided by the Tenderer; or

b) if the successful Tenderer fails to:

i) sign the Contract in accordance with ITT 47; or

ii) furnish a Performance Security and if required in the TDS, and any other documents required in the TDS.

19.8 Where tender securing declaration is executed, the Procuring Entity shall recommend to the PPRA that PPRA debars the Tenderer from participating in public procurement as provided in the law.

19.9 The Tender Security or the Tender-Securing Declaration of a JV shall be in the name of the JV that submits the Tender. If the JV has not been legally constituted into a legally enforceable JV at the time of tendering, the Tender Security or the Tender-Securing Declaration shall be in the names of all future members as named in the letter of intent referred to in ITT 4.1 and ITT 11.2.

19.10 A tenderer shall not issue a tender security to guarantee itself.

20. Format and Signing of Tender

20.1 The Tenderer shall prepare one original of the documents comprising the Tender as described in ITT 11 and clearly mark it "ORIGINAL." Alternative Tenders, if permitted in accordance with ITT 13, shall be clearly marked "ALTERNATIVE." In addition, the Tenderer shall submit copies of the Tender, in the number **specified in the TDS** and clearly mark them "COPY." In the event of any discrepancy between the original and the copies, the original shall prevail.

20.2 Tenderers shall mark as "CONFIDENTIAL" all information in their Tenders which is confidential to their business. This may include proprietary information, trade secrets, or commercial or financially sensitive information.

20.3 The original and all copies of the Tender shall be typed or written in indelible ink and shall be signed by a person duly authorized to sign on behalf of the Tenderer. This authorization shall consist of a written confirmation as specified in the **TDS** and shall be attached to the Tender. The name and position held by each person signing the authorization must be typed or printed below the signature. All pages of the Tender where entries or amendments have been made shall be signed or initialed by the person signing the Tender.

20.4 In case the Tenderer is a JV, the Tender shall be signed by an authorized representative of the JV on behalf of the JV, and so as to be legally binding on all the members as evidenced by a power of attorney signed by their legally authorized representatives.

20.5 Any inter-lineation, erasures, or overwriting shall be valid only if they are signed or initialed by the person signing the Tender.

D. SUBMISSION AND OPENING OF TENDERS

21. Sealing and Marking of Tenders

21.1 The Tenderer shall deliver the Tender in a single sealed envelope, or in a single sealed package, or in a single sealed container bearing the name and Reference number of the Tender, addressed to the Procuring Entity and a warning not to open before the time and date for Tender opening date. Within the single envelope, package or container, the Tenderer shall place the following separate, sealed envelopes:

a) in an envelope or package or container marked "ORIGINAL", all documents comprising the Tender,

as describedinITT11; and

b) in an envelope or package or container marked "COPIES" all required copies of the Tender; and

c) if alternative Tenders are permitted in accordance with ITT 13, and if relevant:

   i) in an envelope or package or container marked "ORIGINAL - ALTERNATIVE TENDER", the alternative Tender; and

   ii) in the envelope or package or container marked "COPIES-ALTERNATIVE TENDER", all required copies of the alternative Tender.

The inner envelopes or packages or containers shall:

a) bear the name and address of the Procuring Entity.

b) Bear the name and address of the Tenderer; and

c) Bear the name and Reference number of the Tender.

21.2 If an envelope or package or container is not sealed and marked as required, the *Procuring Entity* will assume no responsibility for the misplacement or premature opening of the Tender. Tenders that were misplaced or opened prematurely will not be accepted.

22. Deadline for Submission of Tenders

22.1 Tenders must be received by the Procuring Entity at the address specified in the **TDS** and no later than the date and time also specified in the **TDS.** When so specified in the **TDS**, Tenderers shall have the option of submitting their Tenders electronically. Tenderers submitting Tenders electronically shall follow the electronic Tender submission procedures specified in the **TDS**.

22.2 The Procuring Entity may, at its discretion, extend the deadline for the submission of Tenders by amending the Tender Documents in accordance with ITT 8, in which case all rights and obligations of the Procuring Entity and Tenderers previously subject to the deadline shall thereafter be subject to the deadline as extended.

23. Late Tenders

The Procuring Entity shall not consider any Tender that arrives after the deadline for submission of tenders, in accordance with ITT 22. Any Tender received by the Procuring Entity after the deadline for submission of Tenders shall be declared late, rejected, and returned unopened to the Tenderer.

24. Withdrawal, Substitution, and Modification of Tenders

24.1 A Tenderer may withdraw, substitute, or modify its Tender after it has been submitted by sending a written notice, duly signed by an authorized representative, and shall include a copy of the authorization in accordance with ITT 20.3, (except that withdrawal notices do not require copies). The corresponding substitution or modification of the Tender must accompany the respective written notice. All notices must be:

a) prepared and submitted in accordance with ITT 20 and ITT 21 (except that withdrawals notices do not require copies), and in addition, the respective envelopes shall be clearly marked "WITHDRAWAL," "SUBSTITUTION," "MODIFICATION;" and

b) received by the Procuring Entity prior to the deadline prescribed for submission of Tenders, in accordance with ITT 22.

24.2 Tenders requested to be withdrawn in accordance with ITT 24.1 shall be returned unopened to the Tenderers.

24.3 No Tender may be withdrawn, substituted, or modified in the interval between the deadline for submission of Tenders and the expiration of the period of Tender validity specified by the Tenderer on the Form of Tender or any extension thereof.

25. Tender Opening

25.1 Except in the cases specified in ITT 23 and ITT 24.2, the Procuring Entity shall publicly open and read out all Tenders received by the deadline, at the date, time and place specified **in the TDS**, in the presence of Tenderers' designated representatives and anyone who chooses to attend. Any specific electronic Tender opening procedures required if electronic Tendering is permitted in accordance with ITT 22.1, shall be as specified in the **TDS.**

25.2 First, envelopes marked "WITHDRAWAL" shall be opened and read out and the envelopes with the corresponding Tender shall not be opened but returned to the Tenderer. No Tender withdrawal shall be permitted unless the corresponding withdrawal notice contains a valid authorization to request the withdrawal and is read out attender opening.

25.3 Next, envelopes marked "SUBSTITUTION" shall be opened and read out and exchanged with the corresponding Tender being substituted, and the substituted Tender shall not be opened, but returned to the Tenderer. No Tender substitution shall be permitted unless the corresponding substitution notice contains a valid authorization to request the substitution and is read out at Tender opening.Next, envelopes marked "MODIFICATION" shall be opened and read out with the corresponding Tender No. Tender modification shall be permitted unless the corresponding modification notice contains a valid authorization to request the modification and is read out at Tender opening.

25.4 Next, all remaining envelopes shall be opened one at a time, reading out: the name of the Tenderer and whether there is a modification; the total Tender Price, per lot (contract) if applicable, including any discounts and alternative Tenders; the presence or absence of a Tender Security or Tender-Securing Declaration, if required; and any other details as the Procuring Entity may consider appropriate.

25.5 Only Tenders, alternative Tenders and discounts that are opened and read out at Tender opening shall be considered further for evaluation. The Form of Tender and pages of the Bill of Quantities (to be decided on by the tender opening committee) are to be initialed by the members of the tender opening committee attending the opening.

25.6 At the Tender Opening, the Procuring Entity shall neither discuss the merits of any Tender nor reject any Tender (except for late Tenders, in accordance with ITT 23.1).

25.7 The Procuring Entity shall prepare minutes of the Tender Opening that shall include, as a minimum:

a) The name of the Tenderer and whether there is a withdrawal, substitution, or modification;
b) The Tender Price, per lot (contract) if applicable, including any discounts;
c) any alternative Tenders;
d) the presence or absence of a Tender Security, if one was required.
e) number of pages of each tender document submitted.

25.8 The Tenderers' representatives who are present shall be requested to sign the minutes. The omission of a Tenderer's signature on the minutes shall not invalidate the contents and effect of the minutes. A copy of tender opening register shall be issued to a tenderer upon request.

E. Evaluation and Comparison of Tenders

26. Confidentiality

26.1 Information relating to the evaluation of Tenders and recommendation of contract award shall not be disclosed to Tenderers or any other persons not officially concerned with the Tender process until information on Intention to Award the Contract is transmitted to all Tenderers in accordance with ITT 43.

26.2 Any effort by a Tenderer to influence the Procuring Entity in the evaluation of the Tenders or Contract award decisions may result in the rejection of its tender.

26.3 Notwithstanding ITT 26.2, from the time of tender opening to the time of contract award, if a tenderer wishes to contact the Procuring Entity on any matter related to the tendering process, it shall do so in writing.

27. Clarification of Tenders

27.1 To assist in the examination, evaluation, and comparison of the tenders, and qualification of the tenderers, the Procuring Entity may, at its discretion, ask any tenderer for a clarification of its tender, given a reasonable time for a response. Any clarification submitted by a tenderer that is not in response to a request by the Procuring Entity shall not be considered. The Procuring Entity's request for clarification and the response shall be in writing. No change, including any voluntary increase or decrease, in the prices or substance of the tender shall be sought, offered, or permitted, except to confirm the correction of arithmetic errors discovered by the Procuring Entity in the evaluation of the tenders, in accordance with ITT 31.

27.2 If a tenderer does not provide clarifications of its tender by the date and time set in the Procuring Entity's request for clarification, its Tender may be rejected.

28. Deviations, Reservations, and Omissions

28.1 During the evaluation of tenders, the following definitions apply:

a) "Deviation" is a departure from the requirements specified in the tender document;

b) "Reservation" is the setting of limiting conditions or withholding from complete acceptance of the requirements specified in the tender document; and

c) "Omission" is the failure to submit part or all of the information or documentation required in the Tender document.

29. Determination of Responsiveness

29.1 The Procuring Entity's determination of a Tender's responsiveness is to be based on the contents of the tender itself, as defined in ITT 11.

29.2 A substantially responsive Tender is one that meets the requirements of the Tender document without material deviation, reservation, or omission. A material deviation, reservation, or omission is one that, if accepted, would:

a) Affect in any substantial way the scope, quality, or performance of the Works specified in the Contract; or

b) limit in any substantial way, inconsistent with the tender document, the Procuring Entity's rights or the tenderer's obligations under the proposed contract; or

c) if rectified, would unfairly affect the competitive position of other tenderers presenting substantially responsive tenders.

29.3 The Procuring Entity shall examine the technical aspects of the tender submitted in accordance with ITT 16, to confirm that all requirements of Section VII, Works' Requirements have been met without any material deviation, reservation or omission.

29.4 If a tender is not substantially responsive to the requirements of the tender document, it shall be rejected by the Procuring Entity and may not subsequently be made responsive by correction of the material deviation, reservation, or omission.

30. Non-material Non-conformities

30.1 Provided that a tender is substantially responsive, the Procuring Entity may waive any non-conformities in the tender.

30.2 Provided that a Tender is substantially responsive, the Procuring Entity may request that the tenderer

submit the necessary information or documentation, within a reasonable period of time, to rectify nonmaterial non- conformities in the tender related to documentation requirements. Requesting information or documentation on such non-conformities shall not be related to any aspect of the price of the tender. Failure of the tenderer to comply with the request may result in the rejection of its tender.

30.3 Provided that a tender is substantially responsive, the Procuring Entity shall rectify quantifiable nonmaterial non-conformities related to the Tender Price. To this effect, the Tender Price shall be adjusted, for comparison purposes only, to reflect the price of a missing or non-conforming item or component in the manner specified **in the TDS.**

31. Arithmetical Errors

31.1 The tender sum as submitted and read out during the tender opening shall be absolute and final and shall not be the subject of correction, adjustment or amendment in anyway by any person or entity.

31.2 Provided that the Tender is substantially responsive, the Procuring Entity shall handle errors on the following basis:

a) Any error detected if considered a major deviation that affects the substance of the tender, shall lead to disqualification of the tender as non-responsive.

b) Any errors in the submitted tender arising from a miscalculation of unit price, quantity, sub-total and total bid price shall be considered as a major deviation that affects the substance of the tender and shall lead to disqualification of the tender as non-responsive. and

c) If there is a discrepancy between words and figures, the amount in words shall prevail

31.3 Tenderers shall be notified of any error detected in their bid during the notification of award.

32. Conversion to Single Currency

For evaluation and comparison purposes, the currency (ies) of the Tender shall be converted into a single currency **as specified in the TDS**.

33. Margin of Preference and Reservations

33.1 A margin of preference may be allowed only when the contract is open to international competitive tendering where foreign contractors are expected to participate in the tendering process and where the contract exceeds the value/threshold specified in the Regulations.

33.2 A margin of preference shall not be allowed unless it is specified so in the **TDS**.

33.3 Contracts procured on basis of international competitive tendering shall not be subject to reservations exclusive to specific groups as provided in ITT 33.4.

33.4 Where it is intended to reserve a contract to a specific group of businesses (these groups are Small and Medium Enterprises, Women Enterprises, Youth Enterprises and Enterprises of persons living with disability, as the case may be), and who are appropriately registered as such by the authority to be specified in the **TDS**, a procuring entity shall ensure that the invitation to tender specifically indicates that only businesses or firms belonging to the specified group are eligible to tender. No tender shall be reserved to more than one group. If not so stated in the Invitation to Tender and in the Tender documents, the invitation to tender will be open to all interested tenderers.

34. Nominated Subcontractors

34.1 **Unless** otherwise stated **in the TDS,** the Procuring Entity does not intend to execute any specific elements of the Works by subcontractors selected/nominated by the Procuring Entity. In case the Procuring Entity nominates a subcontractor, the subcontract agreement shall be signed by the Subcontractor and the Procuring Entity. The main contract shall specify the working arrangements between the main contractor and the nominated subcontractor.

34.2 Tenderers may propose subcontracting up to the percentage of total value of contracts or the volume of works as specified **in the TDS**. Subcontractors proposed by the Tenderer shall be fully qualified for their parts of the Works.

34.3 Domestic subcontractor's qualifications shall not be used by the Tenderer to qualify for the Works unless their specialized parts of the Works were previously designated so by the Procuring Entity **in the TDS** as can be met by subcontractors referred to hereafter as 'Specialized Subcontractors', in which case, the qualifications of the Specialized Subcontractors proposed by the Tenderer may be added to the qualifications of the Tenderer.

35. Evaluation of Tenders

35.1 The Procuring Entity shall use the criteria and methodologies listed in this ITT and Section III, Evaluation and Qualification Criteria. No other evaluation criteria or methodologies shall be permitted. By applying the criteria and methodologies the Procuring Entity shall determine the Lowest Evaluated Tender in accordance with ITT 40.

35.2 To evaluate a Tender, the Procuring Entity shall consider the following:

a) Price adjustment in accordance with ITT 31.1(iii); excluding provisional sums and contingencies, if any, but including Day work items, where priced competitively;

b) Price adjustment due to discounts offered in accordance with ITT 14.4;

c) converting the amount resulting from applying (a) and (b) above, if relevant, to a single currency in accordance with ITT 32;

d) price adjustment due to quantifiable non-material non-conformities in accordance with ITT 30.3; and

e) any additional evaluation factors specified **in the TDS** and Section III, Evaluation and Qualification Criteria.

35.3 The estimated effect of the price adjustment provisions of the Conditions of Contract, applied over the period of execution of the Contract, shall not be considered intender evaluation.

35.4 Where the tender involves multiple lots or contracts, the tenderer will be allowed to tender for one or more lots (contracts). Each lot or contract will be evaluated in accordance with ITT 35.2. The methodology to determine the lowest evaluated tenderer or tenderers based one lot (contract) or based on a combination of lots (contracts), will be specified in Section III, Evaluation and Qualification Criteria. In the case of multiple lots or contracts, tenderer will be will be required to prepare the Eligibility and Qualification Criteria Form for each Lot.

36. Comparison of Tenders

The Procuring Entity shall compare the evaluated costs of all substantially responsive Tenders established in accordance with ITT 35.2 to determine the Tender that has the lowest evaluated cost.

37. Abnormally Low Tenders and Abnormally High

Tenders Abnormally Low Tenders

37.1 An Abnormally Low Tender is one where the Tender price, in combination with other elements of the Tender, appears so low that it raises material concerns as to the capability of the Tenderer in regards to the Tenderer's ability to perform the Contract for the offered Tender Price or that genuine competition between Tenderers is compromised.

37.2 In the event of identification of a potentially Abnormally Low Tender, the Procuring Entity shall seek written clarifications from the Tenderer, including detailed price analyses of its Tender price in relation to the subject matter of the contract, scope, proposed methodology, schedule, allocation of risks and responsibilities and any other requirements of the Tender document.

37.3 After evaluation of the price analyses, in the event that the Procuring Entity determines that the Tenderer has failed to demonstrate its capability to perform the Contract for the offered Tender Price, the Procuring Entity shall reject the Tender.

Abnormally High Tenders

37.4 An abnormally high tender price is one where the tender price, in combination with other constituent elements of the Tender, appears unreasonably too high to the extent that the Procuring Entity is concerned that it (the Procuring Entity) may not be getting value for money or it may be paying too high a price for the contract compared with market prices or that genuine competition between Tenderers is compromised.

37.5 In case of an abnormally high price, the Procuring Entity shall make a survey of the market prices, check if the estimated cost of the contract is correct and review the Tender Documents to check if the specifications, scope of work and conditions of contract are contributory to the abnormally high tenders. The Procuring Entity may also seek written clarification from the tenderer on the reason for the high tender price. The Procuring Entity shall proceed as follows:

i) If the tender price is abnormally high based on wrong estimated cost of the contract, the Procuring Entity may accept or not accept the tender depending on the Procuring Entity's budget considerations.

ii) If specifications, scope of work and/or conditions of contract are contributory to the abnormally high tender prices, the Procuring Entity shall reject all tenders and may retender for the contract based on revised estimates, specifications, scope of work and conditions of contract, as the case may be.

37.6 If the Procuring Entity determines that the Tender Price is abnormally too high because genuine competition between tenderers is compromised (*often due to collusion, corruption or other manipulations*), the Procuring Entity shall reject all Tenders and shall institute or cause competent Government Agencies to institute an investigation on the cause of the compromise, before retendering.

38. Unbalanced and/or Front-Loaded Tenders

38.1 If in the Procuring Entity's opinion, the Tender that is evaluated as the lowest evaluated price is seriously unbalanced and/or front loaded, the Procuring Entity may require the Tenderer to provide written clarifications. Clarifications may include detailed price analyses to demonstrate the consistency of the tender prices with the scope of works, proposed methodology, schedule and any other requirements of the Tender document.

38.2 After the evaluation of the information and detailed price analyses presented by the Tenderer, the Procuring Entity may as appropriate:

a) accept the Tender; or

b) require that the total amount of the Performance Security be increased at the expense of the Tenderer to a level not exceeding a 10% of the Contract Price; or

c) agree on a payment mode that eliminates the inherent risk of the Procuring Entity paying too much for undelivered works; or

d) reject the Tender,

39. Qualifications of the Tenderer

39.1 The Procuring Entity shall determine to its satisfaction whether the eligible Tenderer that is selected as having submitted the lowest evaluated cost and substantially responsive Tender, meets the qualifying criteria specified in Section III, Evaluation and Qualification Criteria.

39.2 The determination shall be based upon an examination of the documentary evidence of the Tenderer's qualifications submitted by the Tenderer, pursuant to ITT 17. The determination shall not take into consideration the qualifications of other firms such as the Tenderer's subsidiaries, parent entities, affiliates, subcontractors (other than Specialized Subcontractors if permitted in the Tender document),

or any other firm(s) different from the Tenderer.

39.3 An affirmative determination shall be a prerequisite for award of the Contract to the Tenderer. A negative determination shall result in disqualification of the Tender, in which event the Procuring Entity shall proceed to the Tenderer who offers a substantially responsive Tender with the next lowest evaluated price to make a similar determination of that Tenderer's qualifications to perform satisfactorily.

40. Lowest Evaluated Tender

Having compared the evaluated prices of Tenders, the Procuring Entity shall determine the Lowest Evaluated Tender. The Lowest Evaluated Tender is the Tender of the Tenderer that meets the Qualification Criteria and whose Tender has been determined to be:

a) Most responsive to the Tender document; and
b) The lowest evaluated price.

41. Procuring Entity's Right to Accept Any Tender, and to Reject Any or All Tenders.

The Procuring Entity reserves the right to accept or reject any Tender and to annul the Tender process and reject all Tenders at any time prior to Contract Award, without there by incurring any liability to Tenderers. In case of annulment, all Tenders submitted and specifically, Tender securities, shall be promptly returned to the Tenderers.

F. AWARD OF CONTRACT

42. Award Criteria

The Procuring Entity shall award the Contract to the successful tenderer whose tender has been determined to be the Lowest Evaluated Tender.

43. Notice of Intention to enter into a Contract

Upon award of the contract and Prior to the expiry of the Tender Validity Period the Procuring Entity shall issue a Notification of Intention to Enter into a Contract/Notification of award to all tenderers which shall contain, at a minimum, the following information:

a) the name and address of the Tenderer submitting the successful tender;
b) the Contract price of the successful tender;
c) a statement of the reason(s) the tender of the unsuccessful tenderer to whom the letter is addressed was unsuccessful, unless the price information in (c) above already reveals the reason;
d) the expiry date of the Standstill Period; and
e) instructions on how to request a debriefing and/or submit a complaint during the stand still period;

44. Stand still Period

42.1 The Contract shall not be signed earlier than the expiry of a Standstill Period of 14 days to allow any dissatisfied tender to launch a complaint. Where only one Tender is submitted, the Standstill Period shall not apply.

42.2 Where a Standstill Period applies, it shall commence when the Procuring Entity has transmitted to each Tenderer the Notification of Intention to Enter into a Contract with the successful Tenderer.

45. Debriefing by the Procuring Entity

45.1 On receipt of the Procuring Entity's Notification of Intention to Enter into a Contract referred to in ITT 43, an unsuccessful tenderer may make a concern(s) regarding their tender. The Procuring Entity

shall provide the debriefing within five days of receipt of the request.

45.2 Debriefings of unsuccessful Tenderers may be done in writing or verbally. The Tenderer shall bear its own costs of attending such a debriefing meeting.

46. Letter of Award

Prior to the expiry of the Tender Validity Period and upon expiry of the Standstill Period specified in ITT 42.1, upon addressing a complaint that has been filed within the Standstill Period, the Procuring Entity shall transmit the Letter of Award to the successful Tenderer. The letter of award shall request the successful tenderer to furnish the Performance Security within 21 days of the date of the letter.

47. Signing of Contract

47.1 Upon the expiry of the fourteen days of the Notification of Intention to enter into contract and upon the parties meeting their respective statutory requirements, the Procuring Entity shall send the successful Tenderer the Contract Agreement.

47.2 Within fourteen (14) days of receipt of the Contract Agreement, the successful Tenderer shall sign, date, and return it to the Procuring Entity.

47.3 The written contract shall be entered into within the period specified in the notification of award and before expiry of the tender validity period.

48. Performance Security

48.1 Within twenty-one (21) days of the receipt of the Letter of Award from the Procuring Entity, the successful Tenderer shall furnish the Performance Security and, any other documents required in the **TDS**, in accordance with the General Conditions of Contract, subject to ITT 38.2 (b), using the Performance Security and other Forms included in Section X, Contract Forms, or another form acceptable to the Procuring Entity. A foreign institution providing a bank guarantee shall have a correspondent financial institution located in Kenya, unless the Procuring Entity has agreed in writing that a correspondent bank is not required.

48.2 Failure of the successful Tenderer to submit the above-mentioned Performance Security and other documents required in the **TDS** or sign the Contract shall constitute sufficient grounds for the annulment of the award and forfeiture of the Tender Security. In that event the Procuring Entity may award the Contract to the Tenderer offering the next Best Evaluated Tender.

48.3 Performance security shall not be required for contract estimated to cost less than the amount specified in the Regulations.

49. Publication of Procurement Contract

Within fourteen days after signing the contract, the Procuring Entity shall publish the awarded contract at its notice boards and websites; and on the Website of the Authority. At the minimum, the notice shall contain the following information:

a) name and address of the Procuring Entity;

b) name and reference number of the contract being awarded, a summary of its scope and the selection method used;

c) the name of the successful Tenderer, the final total contract price, the contract duration.

d) dates of signature, commencement and completion of contract;

e) names of all Tenderers that submitted Tenders, and their Tender prices as read out at Tender opening.

50. Procurement Related Complaint

The procedures for making Procurement-related Complaints shall be specified in the **TDS.**

SECTION III - TENDER DATA SHEET (TDS)

The following specific data for the Works and Services to be procured shall complement, supplement, or amend the provisions in the Instructions to Tenderers (ITT). Whenever there is a conflict, the provisions herein shall prevail over those in ITT.

ITT REF.	ITT DESCRIPTION
A. General	
ITT 1	The name of the contract is: **Bukunga-Magada Road** **TENDER NUMBER:** **KeRRA/VHG/VHG/10%/008/039/055/2021-2022**
ITT 2.3	The information made available to competing firms is as follows: NONE
ITT 2.4	The firms that provided consultancy services for the contract being tendered for are: NONE
ITT 2.14	The Engineer's Estimate for the works and the budgeted amount is Ksh. 3.91 Million
ITT 3.1	Maximum number of Joint Venture JV shall be Two (2).
ITT 3.12	Valid NCA Registration Certificate and Practicing License in the required category; shall be provided as detailed in the Evaluation/Qualification Criteria SECTION IV
B.	
ITT 7.1	i) The Tenderer will submit any request for clarification in writing at the Address: ***Provided in the detailed Tender Notice*** To reach the Procuring Entity not later than seven (7) days prior to the deadline of bidsubmission. ii) The Procuring Entity will publish the response at the Website www.kerra.go.ke or Regional Notice Board
ITT 7.2	A) A Pre-arranged pretender site visit shall not take place. Due to Covid – 19, bidderswill be expected to make their own site visit arrangements
ITT 7.3	The Tenderer will submit any questions in writing, to reach the Procuring Entity notlater than the date specified in TDS- ITT 7.1
ITT 7.4	Not applicable
ITT 7.5	The Procuring Entity's website where Minutes of the pre-Tender meeting and thepre- arranged pretender will be published is **www.kerra.go.ke** if applicable
C. Preparation of Tenders	
ITT 11.1 (h)	The Tenderer shall submit the following additional documents in its Tender: *Asindicated in the Qualification Form/Criteria*
ITT 13.1	Alternative Tenders shall NOT be considered.
ITT 13.2	Alternative times for completion shall NOT be permitted.
ITT 13.4	Alternative technical solutions shall NOT be permitted for any parts of the Works.
ITT 14.5	The prices quoted by the Tenderer shall be: **Fixed and not subject to adjustments**
ITT 15.2	Foreign currency requirements not allowed.

ITT REF.	ITT DESCRIPTION
ITT 18.1	The Tender validity period shall be **140** days from the specified date of opening as indicated in the invitation to Tender
ITT 18.2	a) The Number of days beyond the expiry of the initial tender validity period will be30 days. The Tender price shall be adjusted by the following percentages of the tender price: *(i)* By 0 % of *the local currency portion of the Contract price adjusted to reflectlocal inflation during the period of extension, and* *(ii) By 0 % the foreign currency portion of the Contract price adjusted to reflectthe international inflation during the period of extension.*
ITT 19.1	*Tender-Securing Declaration (TSD) Form Shall NOT be required and shall provide for automatic be suspension from being eligible for tendering in any contract with the Purchaser for the period of time of not less than two years, if we are in breach of obligation(s) under the bid conditions,*
ITT 19.2	The other security is ***where Applicable should be in the form of:*** ***a bank guarantee or*** ***a guarantee by an insurance company registered and licensed by the Insurance Regulatory Authority listed by the Authority or*** ***a guarantee issued by a financial institution approved and licensed by the Central Bank of Kenya, from a reputable source***
ITT 19.3	*"If an unconditional bank guarantee is issued by a bank located outside Kenya, the issuing bank shall have a correspondent bank located in Kenya to make it enforceable"* here applicable "The Tender Security shall be valid for thirty (30) days beyond the original validity period of the Tender, or beyond any period of extension if requested under ITT 18.2"
ITT 19.5	Other documents required are as specified in ***Form No. 3; Contract Agreement***
ITT 20.1	In addition to the original of the Tender, the number of copies is: **NONE**
ITT 20.3	The written confirmation of authorization to sign on behalf of the Tenderer shall consist of: *Certificate of Independent Tender Determination* ***Part B of Confidential Business Questionnaire and a power of attorney executed/attested by Commissioner of Oaths***
D. Submission and Opening of Tenders	
ITT 21.2	A tender package or container that cannot fit in the tender box shall be received as follows: shall be received at the Supply Chain Management Offices of the location specified in the tender notice.
ITT 22.1	(A) For Tender submission purposes only, the Procuring Entity's address is: As indicated in the **Invitation to Tender** Tenders **shall not be submitted** electronically.
ITT 25.1	If Tenderers are allowed to submit Tenders electronically, they shall follow the electronic tender submission procedures **specified below** ***Not Applicable*** ***Tender opening dates and time shall be as indicated in the invitation to tender***
ITT 25.6	The number of representatives appointed to the Tender Opening Members of the Procuring Entity to sign is ***at least three.*** **The Committee shall initial** **cover page,** **form of tender and** **Bills of Quantities**

ITT REF.	ITT DESCRIPTION
	the last page of the submitted bid and where applicable Tender Securities and/or Tender-Securing Declaration Forms
E. Evaluation, and Comparison of Tenders	
ITT 30.3	For Comparison purposes only; The adjustment shall be based on the average price of the item or component as quoted on other substantially responsive Tenders. If the price of the item or component cannot be derived from the price of other substantially responsive Tenders, the Procuring Entity shall use its Lowest estimate. The Bidders Quoted Bid sum shall not change.
ITT 31.2	The error shall be considered a major deviation that leads to disqualification
ITT 32	The currency that shall be used for Tender evaluation and comparison purposes to convert at the selling exchange rate all Tender prices expressed in various currencies into a single currency is-: Kenya Shillings
ITT 33.2	A margin of preference ***shall NOT*** apply.
ITT 33.4	As indicated by invitation to tender
ITT 34.1	At this time, the Procuring Entity does not intend to execute certain specific parts of the Works by subcontractors selected in advance.
ITT 34.2	Contractor's may propose subcontracting: Maximum percentage of subcontracting permitted is: 40% of the total contract amount. Tenderers planning to subcontract more than 10% of total volume of work shall specify, in the Form of Tender, the activity (ies) or parts of the Works to be subcontracted along with complete details of the subcontractors and their qualification and experience.
ITT 34.3	The parts of the Works for which the Procuring Entity permits Tenderers to propose Specialized Subcontractors are designated as follows: **Any Part of theworks** For the above-designated parts of the Works that may require Specialized Subcontractors, the relevant qualifications of the proposed Specialized Subcontractors will be added to the qualifications of the Tenderer for the purpose of evaluation. ***Not Applicable***
ITT 35.2 (e)	Additional requirements apply. These are detailed in the evaluation criteria in Section IV, Evaluation and Qualification Criteria.
ITT 39	Additional requirements are: As detailed in the Qualification Criteria/Form
ITT 48.1	Performance security shall be in the form of **unconditional Bank guarantee of 5%** of the tender sum Performance security (where applicable) shall be in the form of **unconditional Bank guarantee of 1%** of the tender sum for reserved tenders (contracts reserved for special groups) Delete: "*A foreign institution providing a bank guarantee shall have a correspondent financial institution located in Kenya, unless the Procuring Entity has agreed in writing that a correspondent bank is not required*"
ITT 48.3	The Performance Security shall be for contracts above Kenya Shillings Five Million
ITT 49	The procedures for making a Procurement-related Complaint are available from the PPRA website info@ppra.go.ke or complaints @ppra.go.ke. If a Tenderer wishes to make a Procurement-related Complaint, the Tenderer should submit its complaint following these procedures, in writing (by the quickest means available,that is either

ITT REF.	ITT DESCRIPTION
	by hand delivery or email to: For the attention: ***Regional Director*** Procuring Entity: Vihiga Region ***Kenya Rural Roads Authority (KeRRA)*** Email address: vihiga@kerra.go.ke In summary, a Procurement-related Complaint may challenge any of the following: (i) The terms of the Tender Documents; and (ii) The Procuring Entity's decision to award the contract.
ITT 50	The procedures for making Procurement-related Complaints shall be specified in Special Conditions of Contracts

SECTION IV- EVALUATION AND QUALIFICATION CRITERIA

General Provisions

1 General Provisions

1.1 This section contains the criteria that the Employer shall use to evaluate tender and qualify tenderers. No other factors, methods or criteria shall be used other than specified in this tender document. The Tenderer shall provide all the information requested in the forms included in Section IV, Tendering Forms. The Procuring Entity shall use **the Standard Tender Evaluation Document for Goods and Works** for evaluating Tenders.

1.2 Wherever a Tenderer is required to state a monetary amount, Tenderers should indicate the Kenya Shilling equivalent using the rate of exchange determined as follows:

a) For construction turnover or financial data required for each year - Exchange rate prevailing on the last day of the respective calendar year (in which the amounts for that year is to be converted) was originally established.
b) Value of single contract - Exchange rate prevailing on the date of the contract signature.
c) Exchange rates shall be taken from the publicly available source identified in the ITT 14.3. Any error in determining the exchange rates in the Tender may be corrected by the Procuring Entity.

1.3 Evaluation and contract award Criteria

The Procuring Entity shall use the criteria and methodologies listed in this Section to evaluate tenders and arrive at the Lowest Evaluated Tender. The tender that (i) meets the qualification criteria, (ii) has been determined to be substantially responsive to the Tender Documents, and (iii) is determined to have the Lowest Evaluated Tender price shall be selected for award of contract.

2. Preliminary examination for Determination of Responsiveness

The Procuring Entity will start by examining all tenders to ensure they meet in all respects the eligibility criteria and other requirements in the ITT, and that the tender is complete in all aspects in meeting the requirements of *"Part 2 – Procuring Entity's Works Requirements",* including checking for tenders with unacceptable errors, abnormally low tenders, abnormally high tenders and tenders that are front loaded. The Standard Tender Evaluation Report for Goods and Works for evaluating Tenders provides clear guidelines on how to deal with review of these requirements. Tenders that do not pass the Preliminary Examination will be considered irresponsive and will not be considered further.

[The Procuring Entity will provide the preliminary evaluation criteria. To facilitate, a template may be attached or clearly described all information and list of documentation to be submitted by Tenderers to enable preliminary evaluation of the Tender]

3. Tender Evaluation (ITT 35)

Price evaluation: In addition to the criteria listed in ITT 35.2 (a) – (d) the following criteria shall apply:

i) **Alternative Completion Times,** if permitted under ITT 13.2, will be evaluated as follows:

N/A

ii) **Alternative Technical Solutions** for specified parts of the Works, if permitted under ITT 13.4, will be evaluated as follows: N/A

iii) **Other Criteria; i**f permitted under ITT 35.2(d): N/A

4. Multiple Contracts

4.1 Multiple contracts will be permitted in accordance with ITT 35.4. Tenderers are evaluated on basis of Lots and the lowest evaluated tenderer identified for each Lot. The Procuring Entity will select one Option of the two Options listed below for award of Contracts.

OPTION 1

i) If a tenderer wins only one Lot, the tenderer will be awarded a contract for that Lot, provided the tenderer meets the Eligibility and Qualification Criteria for that Lot.

ii) If a tenderer wins more than one Lot, the tender will be awarded contracts for all won Lots, provided the tenderer meets the aggregate Eligibility and Qualification Criteria for all the Lots. The tenderer will be awarded the combination of Lots for which the tenderer qualifies and the others will be considered for award to second lowest the tenderers.

OPTION 2

The Procuring Entity will consider all possible combinations of won Lots [contract(s)] and determine the combinations with the lowest evaluated price. Tenders will then be awarded to the Tenderer or Tenderers in the combinations provided the tenderer meets the aggregate Eligibility and Qualification Criteria for all the won Lots.

5. Alternative Tenders (ITT 13.1)

An alternative if permitted under ITT 13.1, will be evaluated as follows:

The Procuring Entity shall consider Tenders offered for alternatives as specified in Part2-Works Requirements. Only the technical alternatives, if any, of the Tenderer with the Best Evaluated Tender conforming to the basic technical requirements shall be considered by the Procuring

6. Margin of Preference

6.1 If the TDS so specifies, the Procuring Entity will grant a margin of preference of fifteen percent (15%)to be loaded one valuated price of the foreign tenderers, where the percentage of shareholding of Kenyan citizens is less than fifty-one percent (51%).

6.2 Contractors applying for such preference shall be asked to provide, as part of the data for qualification, such information, including details of ownership, as shall be required to determine whether, according to the classification established by the Procuring Entity, a particular contract or or group of contractors qualifies for a margin of preference.

6.3 After Tenders have been received and reviewed by the Procuring Entity, responsive Tenders shall be assessed to ascertain their percentage of shareholding of Kenyan citizens. Responsive tenders to shall be classified into the following groups:

i) Group A: tenders offered by Kenyan Contractors and other Tenderers where Kenyan citizens hold shares of over fifty one percent (51%).

ii) Group B: tenders offered by foreign Contractors and other Tenderers where Kenyan citizens hold shares of less than fifty one percent (51%).

6.4 All evaluated tenders in each group shall, as a first evaluation step, be compared to determine the lowest tender, and the lowest evaluated tender in each group shall be further compared with each other. If, as a result of this comparison, a tender from Group A is the lowest, it shall be selected for the award. If a tender from Group B is the lowest, an amount equal to the percentage indicated in Item 3.1 of the respective tender price, including unconditional discounts and excluding provisional sums and the cost of day works, if any, shall be added to the evaluated price offered in each tender from Group B. All tenders shall then be compared using new prices with added prices to Group B and the lowest evaluated tender from Group A. If the tender from Group A is still the lowest tender, it shall be selected for award. If not, the lowest evaluated tender from Group B based on the first evaluation price shall be selected.

7. Post qualification and Contract award (ITT 39), more specifically,

a) In case the tender was subject to post-qualification, the contract shall be awarded to the lowest evaluated tenderer, subject to confirmation of pre-qualification data, if so required.

b) In case the tender was not subject to post-qualification, the tender that has been determined to be the lowest evaluated tenderer shall be considered for contract award, subject to meeting each of the following conditions.

i) The Tenderer shall demonstrate that it has access to, or has available, liquid assets, unencumbered real assets, lines of credit, and other financial means (independent of any contractual advance payment) sufficient to meet the construction cash flow estimated at a minimum of ***(30)% of Engineer's Estimate***

ii) Minimum average annual construction turnover of ***Kenya Shillings Eight* (8 million)** equivalents calculated as total certified payments received for contracts in progress and/or completed within the last three (3) years.

iii) At least one (1) contract(s) of a similar nature executed within Kenya, or the East African Community or abroad, that have been satisfactorily and substantially completed as a prime contractor, or joint venture member or sub-contractor each of minimum value Kenya shillings **(One million)**

iv) Contractor's Representative and Key Personnel, which are specified as a site agent with a minimum Qualification of Diploma in Civil Engineering and at least 5 years' experience as a Site Agent.

v) Contractor's key equipment listed on the table "Contractor's Equipment" below:

Contractor's Equipment

Main Scope of Works of this Tender	Main Equipment	Quantity(No) (Minimum)	Yes/NO	
			Owned	Hired/ leased
Grading and gravelling works	Grader	1		
	Mobile concrete mixer	1		
	Loader/ Excavator	1		
	Crawler tractor	1		
	Double Drum vibrating pedestrian roller (3 tons)	1		
Total				

vi) Other conditions depending on their seriousness.

c) **History of non-performing contracts**:
Tenderer and each member of JV incase the Tenderer is a JV, shall demonstrate that Non-performance of a contract did not occur because of the default of the Tenderer, or the member of a JV in the last (5) years. The required information shall be furnished in the appropriate form.

d) Pending Litigation
Financial position and prospective long-term profitability of the Single Tenderer, and in the case the Tenderer is a JV, of each member of the JV, shall remain sound according to criteria established with respect to Financial Capability under Paragraph (i) above if all pending litigation will be resolved against the Tenderer. Tenderer shall provide information on pending litigations in the appropriate form.

e) Litigation History
There shall be no consistent history of court/arbitral award decisions against the Tenderer, in the last (3 years). All parties to the contract shall furnish the information in the appropriate form about any litigation or arbitration resulting from contracts completed or ongoing under its execution over the years specified. A consistent history of awards against the Tenderer or any member of a JV may result in rejection of the tender.

EVALUATION /QUALIFICATION CRITERIA

To be qualified for award of Contract, the tenderer shall provide evidence satisfactory to the Employer of their eligibility and of their capability and adequacy of resources to effectively carry out the subject Contract. To this end, the tenderer shall be required to provide latest information set out below:

A. PRELIMINARY EXAMINATION

1) Certified Certificate of Incorporation by Registrar of Companies.

2) Current Certified CR12 Certificate (dated within 12 Months before date of opening) from the Registrar of Companies. This should be provided with Identification Documents of Directors *and all individuals listed on the CR12*. (ID or Passport). For Corporate Directors, CR12 or its equivalent for the corporate directors, Identification Documents for the corporate Director and its directors **MUST** be provided.

3) Provide (NOT APPLICABLE*)* valid certified certificate of registration with National Treasury for Access to Government Procurement Opportunities (AGPO) in the relevant group (Women, Youth or Persons Living with Disability)-for PWD bidders should provide evidence of directors registration with the National Council of People Living with Disability

4) Valid Certified Current Single Business permit

5) Provide a Valid Tax Compliance Certificate or Tax exemption certificate issued by Kenya Revenue Authority in accordance with ITT 4.14.

6) Tender Security (*NOT APPLICABLE)* in the amount specified in the tender Data Sheet. The Format to be as issued with this Tender and valid for the period specified under ITT 19. Alteration of the format shall lead to disqualification

7) Duly filled Tender Securing Declaration Form shall be in the format issued in this Tender and validly executed in accordance with ITT 19. Alteration of the format shall lead to disqualification

8) Current Certificate of Registration with National Construction Authority in the **Category NCA (*7-6 roadworks Category*)** together with a valid NCA practicing license f*or the same*

9) Submit a written power of attorney authorizing the signatory of the bid to commit the Bidder *Executed* by a Commissioner for Oaths, in accordance with ITT 20.3.

10) Declare conflicts of interest in accordance with ITT 3.3; provide a sworn-in affidavit *executed* by a Commissioner for Oaths specific to this tender.

11) Dully filled, Signed and stamped (*With Company Seal/ Rubber Stamp) ALL* Tendering Forms and Schedules, given under Section V of the tender document.

12) Dully, Filled, Signed and Stamped Confidential Business Questionnaire

13) Duly filled-in and Signed Form of Tender Pursuant to ITT 12

14) Dully Priced Bills of Quantities Pursuant to ITT 14

15) Pre-Tender Site Visit Certificate duly endorsed by the Authorized KeRRA Representative (*Not applicable)*

16) All pages of the Tender Document MUST be Chronologically Serialized (this should be sequential in the format of 1,2,3,4,5…….) from the first page to the last page. Pursuant to ITT 12.1.

17) If Tender is a Joint Venture, should meet the requirements as given Pursuant to ITT3.5.

18) Provide a Work Methodology relevant to the proposed works.

19) Bidders to demonstrate that Goods, equipment and services to be supplied under the contract to have their

origin in any country that is not determined ineligible under ITT 4.1

20) Submission of Audited Accounts or equivalent acceptable to the Employer, for the last three [3] years to demonstrate: the current soundness of the applicant's financial position and its prospective long-term profitability, and capacity to have a cash flow amount, turnover and working capital.

21) Bidders must not have been declared ineligible by the PPRA as described in ITT 3.7

22) Declaration of Current ongoing Works

23) Attach proof of similar previous experience (attach award letters and completion certificates)

24) Attach proof of equipment holding in the format provided

QUALIFICATION FORM

Item No.	Qualification Subject	Qualification Requirement	*Document To be Completed/provided by Tenderer*	*For Procuring Entity's Use (Qualification met or Not Met)*
A. PRELIMINARY EVALUATION				
1.	Nationality	Nationality in accordance with ITT 4.5	Forms ELI - 1.1, 1.2 and 1.3, with attachments	
2.	Tax Obligations for Kenyan Tenderers	Has produced a current tax clearance certificate or tax exemption certificate issued by Kenya Revenue Authority in accordance with ITT 3.14.	Form of Tender	
3.	Conflict of Interest	No conflicts of interest in accordance with ITT 4.3	Form of Tender	
4.	**PPRA** Eligibility	Not having been declared ineligible by the PPRA as described in ITT 4.6	Form of Tender - **Form SD1**	
5.	State ownedEnterprise	Meets conditions of ITT 4.7	Forms ELI - 1.1 and 1.2, with attachments	
6.	Goods, equipment and services to be supplied under the contract	To have their origin in any country that is not determinedineligible under ITT 4.1	Forms ELI - 1.4	
7.	History of Non- Performing Contracts	Non-performance of a contract did not occur as a result of contractor default since 1st January [2015}.	Form CON-2	
8.	Suspension Based on Execution of Tender / Proposal Securing Declaration by the Procuring Entity	Not under suspension based on- execution of a Tender/Proposal Securing Declaration pursuant to ITT4.8.	To be confirmed from Internal records by the procuring entity	
9.	Pending Litigation	Tender's financial position and prospective long-term profitability still sound according to criteria established in 3.1 and assuming that all pending	Form CON - 1	

Item No.	Qualification Subject	Qualification Requirement	*Document To be Completed/provided by Tenderer*	*For Procuring Entity's Use (Qualification met or Not Met)*
		litigation will NOT be resolved against the Tenderer		
10.	Litigation History	No consistent history of court/arbitralaward decisions against the Tenderer for the last three (3) years.	Form CON - 1	
11.	Declaration of Fair employment laws and practices	Bidders shall declare they are not guilty of any serious violation of fair employment laws and practicesand will be bound to abide by the industry CBA at minimum	Form CON - 2	
12.	Declaration of Knowledge of Site /Pre-Bid Conference	Attend Pre-Tender Site Visits as per TDS,ITT 8.1	Form CON - 3	
13.	Tender Security	Tender Security document	Form in the Prescribed Format(Not applicable)	
14.	Priced Bill of Quantities	✓ Fill all rates, and amounts, ✓ NO Alterations of the Quantities accepted, ✓ All bidders own Corrections must be Countersigned ✓ NO Errors noted in the Bills ofQuantities	Bills of Quantity in the Prescribed Format	
15.	Serialization of theBid	Bidders shall sequentially serializeall pages of each tender submitted. Any written Pages or documentattached or inserted Documents **MUST** be sequentially serialized.	The Serialization MUST be numerically sequential starting from Numeric 1.	
16.	Completeness of tender document	The person or persons signing the bid **shall** initial all pages of the bidwhere entries have been made.	All pages with entries (Typedor hand written) must be initialed. Any alterations made in the tender document must be countersigned.	

Item No.	Qualification Subject	Qualification Requirement	*Document To be Completed/provided by Tenderer*	*For Procuring Entity's Use (Qualification met or Not Met)*
15.	Serialization of the Bid	Bidders shall sequentially serialize all pages of each tender submitted. Any written Pages or document attached or inserted Documents **MUST** be sequentially serialized.	The Serialization MUST be numerically sequential starting from Numeric 1.	
16.	Completeness of tender document	The person or persons signing the bid **shall** initial all pages of the bid where entries have been made.	All pages with entries (Typed or hand written) must be initialed. Any alterations made in the tender document must be countersigned.	
B. TECHNICAL EVALUATION				
1.	History of Non-Performing Contracts	Non-performance of a contract did not occur as a result of contractor default for the last three (3) years. Non-performance shall be deemed to have occurred by evidence of: • Termination Letter • Liquidated Damages	Form CON-1 If a bidder fails to disclose, shall be disqualified Reference to be made to procuring Authority's records A bidder with any history of non-performance earns zero(0) marks	

Item No.	Qualification Subject	Qualification Requirement	*Document To be Completed/provided by Tenderer*	*For Procuring Entity's Use (Qualification met or Not Met)*
2.	Financial Capabilities	(i) Bidders shall provide audited balance sheets or, if not required by the laws of the Tenderer's country, other financial statements acceptable to the Procuring Entity, for the last ***3 years*** shall be submitted and must demonstrate the current soundness of the Tenderer's financial position and indicate its prospective long-term profitability (as demonstrated by Financial Evaluation ratios).	Form FIN - 3.1, with attachments Attachments include: i. Audited accounts All pages must be initialed and stamped by both a practicing Auditor registered with ICPAK and one of the Directors. Auditor's practicing membership number from ICPAK must be indicated and a valid practicing license shall be provided.	

Item No.	Qualification Subject	Qualification Requirement	*Document To be Completed/provided by Tenderer*	*For Procuring Entity's Use (Qualification met or Not Met)*
		(ii) The Tenderer shall demonstrate that it has access to, or has available, liquid assets, unencumbered real assets, lines of credit, and other financial means (independent of any contractual advance payment) sufficient to meet the construction cash flow requirements estimated at a minimum of 10% of Engineer's Estimate for the subject contract(s) net of the Tenderer's other commitments. The Tenderers shall also demonstrate, to the satisfaction of the Procuring Entity, that it has adequate sources of finance to meet the cash flow requirements on works currently in progress and for future contract commitments.	• Line of Credit • Bank statements Etc.	
	Average Annual Construction Turnover	(iii)Minimum average annual construction turnover of Kenya Shillings ***(8 Million)***, equivalent calculated as total certified payments received for contracts in progress and/or completed within the last ***Three*** years, divided *by the number of* ***years***	Form FIN - 3.2 ***Attachments include Financial Statements***	
3.	Ongoing Works	Value of outstanding works shall not be	Form FIN - 3.4	

Item No.	Qualification Subject	Qualification Requirement	*Document To be Completed/provided by Tenderer*	*For Procuring Entity's Use (Qualification met or Not Met)*
		more than the Engineer`s Estimate	If the outstanding Works is more than the Engineer`s Estimate of this bid, the bidder loses	
	General Construction Experience	Experience under construction contracts in the role of prime contractor, JV member, sub-contractor, or management contractor, substantially completed in the last **three** ***years*** prior to the applications submission deadline.	Form EXP -4.1 ***Attach Letters of Award and Completion Certificates***	
	Specific Construction &Contract Management Experience	Participation in at least one similar Contract of minimum **cumulative** value of **(*one Million*)** as filled in Form EXP 4.2(a) that have been satisfactorily and substantially completed by the bidder, as a prime contractor, joint venture member, management contractor or sub-contractor in the last *[3 years]* prior to the applications submission deadline. The similarity shall be based on the physical size, complexity, methods / technology or other characteristics	Form EXP 4.2(a)&(b) ***Provide Letters of Award and Completion Certificates*** ***For subcontracted works, the bidder should provide thefollowing;*** • ***Award letter of the maincontractor*** • ***Award letter of thesubcontract.*** • ***Completion letter of thesubcontract.*** • ***Subcontract approval from the Engineer/supervision Authority***	

Item No.	Qualification Subject	Qualification Requirement	*Document To be Completed/provided by Tenderer*	*For Procuring Entity's Use (Qualification metor Not Met)*
4.	Contractor's Representativeand Key Personnel	Curriculum Vitae (CVs) of the Proposed Key Staff must be presented in the provided format and duly signed by the proposed individual. Copies of certificates and Annual Practicing Licenses (for Engineers) and Academic Certificates for all staff is mandatory;	Schedule F (Form PER. 1 and PER. 2)	
		The site staff shall possess minimum levels set below;		
		Site Agent	Qualification = Bachelors in Civil Eng. Reg. Eng General Experience = 5 yrs, Specific Experience = 3 Yrs	
		Senior Foreman	Qualification =Diploma in Civil Eng. General Experience = 5 yrs, Specific Experience = 3 Yrs	
		Site Surveyor	Qualification = Diploma in Survey General Experience = 5 yrs Specific Experience = 3 Yrs	
5.	Contractors key equipment	• Bidders shall declare they have possession/Ownership of various equipment as proposed to be used in the Project by providing Logbooks that demonstrate proof of ownership • For Bidders planning to hire, they shall provide an Active Lease Agreement in Place that can be used	FORM EQU: EQUIPMENT UNDER SECTION V – TENDERING FORMS	

Item No.	Qualification Subject	Qualification Requirement	Document To be Completed/provided by Tenderer	For Procuring Entity's Use (Qualification metor Not Met)
		during the Project Life. The copy of logbooks of the lessor(s) shall also be provided.		

Main Scope of Works of this Tender	Main Equipment	Quantity (No) (Minimum)	Marks (Score)	
			Owned	Hired/ leased
Description of works	*(Insert equipment as appropriate)*			
Total				

6.	Proposed methodology	Adequacy and quality of the proposed methodology	***a)*** **Technical approach and methodology** • Provided a detailed Work Methodology	
			• Provided a Methodology on safety during the constructionperiod	
			• Provided a specific Quality managementplan	

Item No.	Qualification Subject	Qualification Requirement	*Document To be Completed/provided by Tenderer*	*For Procuring Entity's Use (Qualification metor Not Met)*
			b) **Work plan/*Program of Works (PoW)*** • PoW Resourced with Equipment-Min. allocation pursuant to the ***Schedule …. of Technical Proposal*** - – To be submitted in A3 Size Paper well legible Fonts • PoW captures Monthly outputs for each activity • PoW details BoQ Quantities, Units and Rates • PoW is superimposed withCash flow Projections as detailed in ***Schedule …..*** of the technical proposal c) **Site Organization and staffing** (Schedule of Technical proposal)	

Item No.	Qualification Subject	Qualification Requirement	*Document To be Completed/provided by Tenderer*	*For Procuring Entity's Use (Qualification met or Not Met)*
7.	Knowledge Transfer *[When transfer of knowledge is a particularly important component of the assignment, the following sub- criteria may be provided]*	Transfer of knowledge (training) program (relevance of approach and methodology	*a)* Relevance of training program *[**Not Applicable**]* *b)* Training approach and methodology *[**Not Applicable**]* *c)* Qualifications of experts and trainers *[**Not Applicable**]*	

Tenderers who pass the technical evaluation will be evaluated further.

C. FINANCIAL EVALUATION: Lowest Evaluated Bidder is subjected to Post Qualification Evaluation

D. POST QUALIFICATION: The procuring entity shall verify the documents provided by the bidder with the issuing authority.

In line with ITT 3.12 Confirm Bidders Proof of registration with the National Construction Authority in Category *(Indicate As Appropriate)* as Roads/Bridges Contractor (Attach copy of Current NCA Practicing License); Tax Compliance Certificate; bid security (where applicable); specific experience; equipment ownership; credit facility (determine financial capacity/soundness) and on-going works (where applicable)

APPENDIX TO THE QUALIFICATION CRITERIA

ITEM	DESCRIPTION	Qualification Requirement	*Document To be Completed/provided by Tenderer*
1	**HISTORY OF NON-PERFORMANCE**	•	
	History of Non-Performance	Non-performance of a contract didnot occur as a result of contractor default for the last three (3) years. Non-performance shall be deemed to have occurred by evidence of: • Termination Letter • Liquidated Damages	Form CON-1 If a bidder fails to disclose, shall be disqualified Reference to be made to procuring Authority's records A bidder with any history of non-performance shall be disqualified
2	**FINANCIAL CAPACITY**		
	Audited Statements	✓ Bidders shall provide audited balance sheets or, if not required by the laws of the Tenderer's country, other financial statements acceptable to the Procuring Entity, for the last ***Three*** shall be submitted and must demonstrate the current soundness of the Tenderer's financial position and indicate its prospective long-term profitability (as demonstrated by Financial Evaluation ratios). Firms incorporated within the last three years MUST demonstrate financial ability in the form of Line of Credit equivalent to required working capital.	✓ All pages must be initialed and stamped by both a practicing Auditor registered with ICPAK andone of the Directors. ✓ Auditor's practicing membership number from ICPAK must be indicated and a valid practicing license shall be provided
	Computation of Financial Ratios		

ITEM	DESCRIPTION			Qualification Requirement	*Document To be Completed/provided by Tenderer*
	Working capital			The Tenderer shall demonstrate that it has access to, or has available, liquid assets, unencumbered real assets, lines of credit, and other financial means (independent of any contractual advance payment) sufficient to meet the cashflow requirements estimated at a minimum of *KShs one Million* for the subject contract(s) netof the Tenderer's other commitments. The Tenderers shall also demonstrate, to the satisfaction of the Procuring Entity, that it has adequate sources of finance to meet the cash flow requirements on works currently in progress and for future contract commitments	• Line of Credit • Bank statements
	Turnover			Minimum average annual construction turnover of Kenya Shillings ***(Eight Million)*** equivalent calculated as total certified payments received for contracts in progress and/or completed within the last ***three*** years, divided by ***Number of Years***	Form FIN - 3.2 ***Attachments include Financial Statements***
3	**EXPERIENCE**				
	Workload Analysis				
	General Experience				
	Specific experience in related works				
4	**KEY PERSONNEL**				
	Site Agent	Qualification	Degree		
			HND		
			Diploma		
		Relevant experience	Above 5 years		
			0 – 5 years		
5	**PLANT AND EQUIPMENT**				

ITEM	DESCRIPTION		Qualification Requirement	*Document To be Completed/provided by Tenderer*
	Relevant Equipment (As Detailed in FORM EQU)	Owned		
		100% Leased		
6	**PROGRAM OF WORKS AND WORK METHODOLOGY**			
6a	Work Methodology	Provided a detailed Work Methodology		
		Provided a Methodology on safety during the construction period		
		Provided a specific Quality management plan		
6b	Program of Works	PoW Resourced with Equipment- Min. allocation pursuant to the Schedule E of Technical Proposal :- To be submitted in A3 Size Paper well legible Fonts		
		PoW captures Monthly outputs for each activity		
		PoW details BoQ Quantities, Units and Rates		
		PoW is superimposed with cash flow Projections as detailed in Schedule A of the technical proposal		
	Site base facilities	Site Organization and staffing (Schedule B of Technical proposal). Proposal on office & stock yard facilities – identify location and condition of the planned site office and stockyard. Attachment of map and photo preferably		
	Responsive/Non-responsive			

QUALIFICATION FORMS

1. FORM EQU: EQUIPMENT

The Tenderer shall provide adequate information to demonstrate clearly that it has the capability to meet the requirements for the key equipment listed in Section III, Evaluation and Qualification Criteria. A separate Form shall be prepared for each item of equipment listed, or for alternative equipment proposed by the Tenderer.

Item of Equipment		
Equipment information	Name of manufacturer	Model and power rating
	Capacity	Year of manufacture
Current Status	Current location	
	Details of Current Commitments	
Source	Indicate source of the equipment ☐ Owned ☐ leased ☐ Rented ☐ Specially manufactured	
Omit the following information for equipment owned by the Tenderer		
Owner	Name of owner	
	Address of owner	
	Telephone	Contact name and tittle
	Fax	Telex
Agreements	Details of rental/lease/ manufacturer agreements specific to the project	

2. FORM PER -1

Contractor's Representative and Key Personnel Schedule

Tenderers should provide the names and details of the suitably qualified Contractor's Representative and Key Personnel to perform the Contract. The data on their experience should be supplied using the Form PER-2 below for each candidate.

Contractor' Representative and Key Personnel

1	**Title of position:** Contractor's Representative	
	Name of Candidate:	
	Duration of appointment	
	Time commitment: for this position	
	Expected time schedule for this position	
2	**Title of position**	
	Name of Candidate:	
	Duration of appointment	
	Time commitment: for this position	
	Expected time schedule for this position	
3	**Title of position:**	
	Name of Candidate:	
	Duration of appointment	
	Time commitment: for this position	
	Expected time schedule for this position	
4	**Title of position:**	
	Name of Candidate:	
	Duration of appointment	
	Time commitment: for this position	
	Expected time schedule for this position	
5	**Title of position:**	
	Name of Candidate:	
	Duration of appointment	
	Time commitment: for this position	
	Expected time schedule for this position	

3. FORM PER-2:

Resume and Declaration - Contractor's Representative and Key Personnel.

Name of Tenderer		
Position[#]: [Tittle of position from Form PER-1]		
Personnel Information	Name:	Date of birth
	Address:	Email:
	Professional qualifications:	
	Academic qualifications:	
	Language proficiency:*[language and levels of speaking, reading and writing skills]*	
Details		
	Address of procuring Entity	
	Telephone:	Contact(manager/personnel officer):
	Fax	
	Job Title	Years with present procuring Entity

Summarize professional experience in reverse chronological order. Indicate particular technical and managerial experience relevant to the project.

Project	**Role**	**Duration of Involvement**	**Relevant Experience**
[Main project details]	*[role and responsibilities on the project]*	*[time in role]*	*[describe the experience relevant to this position]*

Declaration

I, the undersigned *[insert either "Contractor's Representative" or "Key Personnel" as applicable]*, certify that to the best of my knowledge and belief, the information contained in this Form PER-2 correctly describes myself, my qualifications and my experience.

I confirm that I am available as certified in the following table and throughout the expected time schedule for this position as provided in the Tender:

Commitments	Details
Commitments to duration of contracts:	
Time Commitment:	

I understand that any misrepresentation or omission in this Form may:

a) be taken into consideration during Tender evaluation;
b) result in my disqualification from participating in the Tender;
c) result in my dismissal from the contract.

Name of Contractor's Representative or Key Personnel: [*insert name*]

Name & Signature: _____

Date: (day month year): _____

Countersignature of authorized representative of the Tenderer:

Name & Signature:_____

Date: (day month year): _____

4. TENDERERS QUALIFICATION WITHOUT PRE-QUALIFICATION

To establish its qualifications to perform the contract in accordance with Section III, Evaluation and Qualification Criteria the Tenderer shall provide the information requested in the corresponding Information Sheets included hereunder.

FORM ELI -1.1 Tenderer Information Form

Date:_____

ITT No. and title: _____

Tenderer's Name:
In case of Joint Venture (JV), Name of each member:
Tenderer's actual or intended country of registration: *[indicate country of constitution]*
Tenderer's actual or intended year of incorporation
Tenderer's legal address[in country of registration]:
Tenderer 'authorized representative information: Name:_____ Address:_____ Telephone / Fax numbers:_____ E-mail address: _____
1. Attached are original documents of ☐ Articles of Incorporation(or equivalent document of constitution or association) and/or documents of registration of legal entity named above, in accordance with ITT 3.6 • ☐ In case of JV, letter of intent to form JV or JV Agreement, in accordance with ITT 3.5 • ☐ In case of state-owned enterprise or institution, in accordance with ITT3.8, documents establishing; • legal and financial autonomy, • Operation under commercial Law, • Establishing that the tenderer is not under the supervision of the Procuring Entity in accordance with ITT 3.8 2. Included are the organizational chart, a list of Board of Directors and the beneficial ownership.

FORM ELI -1.2

Tenderer's JV Information Form

(to be completed for each member of Tenderer's JV)

Date:_____

ITT No. and title:_____

1. Tenderer's JV Name:
2. JV Member's name:
3. JV Member's country of registration
4. JV Member's year of Constitution *:*
5. JV Member's legal address in country of Constitution:
6. JV Member's Authorized Representative Information Name: Address: Telephone/Fax numbers: Email Address:
1. Attached are original documents of ☐ Articles of Incorporation(or equivalent document of constitution or association) and/or documents of registration of legal entity named above, in accordance with ITT 3.6 ☐ In case of state-owned enterprise or institution, documents establishing legal and financial autonomy, Operation under commercial Law, and that they are not under supervision of the Procuring Entity in accordance with ITT 3.8 2. Included are the organizational chart, a list of Board of Directors and the beneficial ownership.

FORM CON - 2

Historical Contract Non-Performance,
Pending Litigation and Litigation History

Tenderer's Name: _____

Date:_____

JV Member's Name_____

ITT No. and title: _____

Non-Performed contracts in accordance with section III, Evaluation and Qualifications			
☐ Contract non-performance did not occur since 1st January *[insert year]* specified in section III Evaluation and Qualification Criteria, Sub-Factor 2.1 ☐ Contract(s) not performed since 1st January *[insert year]* specified in section III Evaluation and Qualification Criteria, Sub-Factor 2.1			
Year	**Non-performed portion of contract**	**Contract Identification**	**Total Contract Amount (current value, currency, exchange rate and Kenya Shilling equivalent)**
[insert year]	*[inset amount and percentage]*	Contract Identification: *[indicate complete contract name/ number, and any other identification]* Name of Procuring Entity: *[insert full name]* Address of Procuring Entity: *[insert street/city/country]* Reason(s) for non-performance: *[indicate main reason(s)*	

Pending Litigation, in accordance with section III, Evaluation and Qualification Criteria			
☐ No pending litigation in accordance with section III, Evaluation and Qualification Criteria, Sub-Factor 2.3 ☐ Pending litigation in accordance with section III, Evaluation and Qualification Criteria, Sub-Factor 2.3 as indicated below.			
Year of dispute	**Amount in dispute (currency)**	**Contract Identification**	**Total Contract Amount (Currency), Kenya shillings Equivalent (Exchange Rate)**
		Contract Identification:_____ Name of Procuring Entity: _____ Address of Procuring Entity: _____ Matter in dispute:_____ Party who initiated the dispute:_____ Status of dispute:_____	
		Contract Identification: Name of Procuring Entity: Address of Procuring Entity: Matter in dispute: Party who initiated the dispute: Status of dispute:	

Litigation History in accordance with section III, Evaluation and Qualification Criteria.			
☐ No litigation History in accordance with section III, Evaluation and Qualification Criteria, Sub-Factor 2.4 ☐ Litigation History in accordance with section III, Evaluation and Qualification Criteria, Sub-Factor 2.4 as indicated below.			
Year of award	**Outcome as percentage of Net Worth**	**Contract Identification**	**Total Contract Amount (Currency), Kenya shillings Equivalent (Exchange Rate)**
[insert year]	*[insert percentage]*	Contract Identification:……*[indicate complete contract name, number, and any other Identification]* Name of Procuring Entity: ……*[insert full name]* Address of Procuring Entity:……*[insert street/city/county]*	*[insert amount]*

		Matter in dispute: ……*[indicate main issue in dispute]* Party who initiated the dispute:……..*[indicate "procuring entity "or "contractor"* Reason(s) for litigation and award decision I……..[*indicate main reason(s)]*	

5. 57: FORM FIN – 3.1

Financial Situation and Performance

Tenderer's Name: _____

Date:_____

JV Member's Name_____

ITT No. and title: _____

5.4.1. Financial Data

Type of Financial Information in KShs (currency)	Historic information for previous *(insert as appropriate)* years, _____ *(Amount in currency (KShs))*		
	Year 1	Year 2	Year 3
Statement of Financial Position (Information from Balance Sheet)			
Total Assets(TA)			
Total Liability (TL)			
Total Equity/Net Worth (NW)			
Current Assets (CA)			
Current Liability (CL)			
Working Capital (WC)			
Information from Income Statement			
Total Revenue (TR)			
Profits Before Taxes (PBT)			
Cash Flow Information			
Cash Flow from Operating Activities			

Sources of Finance

Specify sources of finance to meet the cash flow requirements on works currently in progress and for future contract commitments.

No	Source of finance	Amount (Kenya shillings equivalent)
1		
2		
3		

Financial documents

The Tenderer and its parties shall provide copies of financial statements for_____years pursuant Section III, Evaluation and Qualifications Criteria, Sub-factor 3.1. The financial statements shall:

a) reflect the financial situation of the Tenderer or in case of JV member, and not an affiliated entity (such as parent company or group member).

b) be independently audited or certified in accordance with local legislation.

c) be complete, including all notes to the financial statements.

d) correspond to accounting periods already completed and audited.

Attached are copies of financial statements[1] for the_____years required

above; and complying with the requirements

5.5 FORM FIN – 3.2

Average Annual Construction Turnover

Tenderer's Name: _____

Date:_____

JV Member's Name_____

ITT No. and title: _____

Annual Turnover data (Construction only)	
Year	**Kenya Shillings**
[indicate year]	
Average Annual Construction Turnover	

* *See Section III, Evaluation and Qualification Criteria, Sub-Factor 3.2.*

[1] *If the most recent set of financial statements is for a period earlier than 12 months from the date of Tender, the reason for this should be justified.*

5. 59 FORM FIN – 3.3:

Financial Resources

Specify proposed sources of financing, such as liquid assets, unencumbered real assets, lines of credit, and other financial means, net of current commitments, available to meet the total construction cash flow demands of the subject contract or contracts as specified in Section III, Evaluation and Qualification Criteria

Financial Resource		
NO	**Source of financing**	**Amount (Kenya Shilling Equivalent)**
1		
2		
3		
4		

5.7 FORM FIN – 3.4:

Current Contract Commitments / Works in Progress

Tenderers and each member to a JV should provide information on their current commitments on all contracts that have been awarded, or for which a letter of intent or acceptance has been received, or for contracts approaching completion, but for which an unqualified, full completion certificate has yet to be issued.

Financial Resource		
NO	**Source of financing**	**Amount (Kenya Shilling Equivalent)**
1		
2		
3		
4		

5.8 FORM EXP - 4.1

General Construction Experience

Tenderer's Name: _____

Date:_____

JV Member's Name_____

ITT No. and title: _____

Page_____of_____pages

Starting Year	Ending Year	Contract Identification	Role of Tenderer
		Contract name: _____ Brief Description of the work performed by the tenderer:_____ Amount of contract:_____ Name of Procuring Entity: _____ Address:_____	
		Contract name: _____ Brief Description of the work performed by the tenderer:_____ Amount of contract:_____ Name of Procuring Entity: _____ Address:_____	
		Contract name: _____ Brief Description of the work performed by the tenderer:_____ Amount of contract:_____ Name of Procuring Entity: _____ Address:_____	

5.9 FORM EXP - 4.2(a)

Specific Construction and Contract Management Experience

Tenderer's Name: _____

Date:_____

JV Member's Name_____

ITT No. and title: _____

Contract No.	**Information**			
Contract Identification				
Award Date				
Completion Date				
Role in Contract	☐ Prime Contractor	☐ Member in JV	☐ Management Contractor	☐ Sub- contractor
Total Contract Amount				Kenya Shillings
If a member in JV or Sub-contractor specify participation in total contract amount				
Procuring Entity Name				
Address: Telephone/Fax Number: E-mail:				
Description of the similarity in with Sub-Factor 4.2 (a) of Section III:				
1. Amount				
2. Physical size of required works items				
3. Complexity				
4. Methods/Technology				
5. Construction rate for key activities				
6. Other Characteristics				

10.1 FORM EXP - 4.2(b)

Construction Experience in Key Activities

Tenderer's Name: _____

Date:_____

Tenderer's JV Member Name:_____

Sub-contractor's Name[2] (as per ITT 34):_____

ITT No. and title: _____

All Sub-contractors for key activities must complete the information in this form as per ITT 34 and Section III, Evaluation and Qualification Criteria, Sub-Factor 4.2.

1. Key Activity No One: -

	Information			
Contract Identification				
Award Date				
Completion Date				
Role in Contract	☐ Prime Contractor	☐ Member in JV	☐ Management Contractor	☐ Sub- contractor
Total Contract Amount	Kenya Shillings			
Quantity (Volume, Number or rate of production, as applicable) Performed under the contract per year	Total Quantity in the contract (i)	Percentage participate (ii)	Actual Quantity Performed (i) x (ii)	
Year 1				
Year 2				
Year 3				
Year 4				
Procuring Entity's Name:				
Address: Telephone/ Fax number E-mail:				
Description of the key activities in according with Sub-Factor 4.2 (b) of Section III				

2. Activity No. Two 3. ……

If applicable

OTHER FORMS

6 ***FORM OF TENDER***

INSTRUCTIONS TO TENDERERS

i) The Tenderer must prepare this Form of Tender on stationery with its letterhead clearly showing the Tenderer's complete name and business address.

ii) All italicized text is to help Tenderer in preparing this form.

iii) Tenderer must complete and sign CERTIFICATE OF INDEPENDENT TENDER DETERMINATION and the SELF DECLARATION OF THE TENDERER attached to this Form of Tender.

iv) The Form of Tender shall include the following Forms duly completed and signed by the Tenderer.

- *Tenderer's Eligibility- Confidential Business Questionnaire*
- *Certificate of Independent Tender Determination*
- *Self-Declaration of the Tenderer*

Date of this Tender submission: *…….[insert date (as day, month and year) of Tender submission]*

Request for Tender No.: …….*[insert identification*]

Name and description of Tender…… *[Insert as per ITT)*

Alternative No.:…… [*insert identification No if this is a Tender for an alternative*]

To:……

…… [*insert complete name of Procuring Entity*] Dear Sirs,

1. In accordance with the Conditions of Contract, Specifications, Drawings and Bills of Quantities for the execution of the above-named Works, we, the undersigned offer to construct and complete the Works and remedy any defects therein for the sum of Kenya Shillings [*[Amount in figures]*_____ _____Kenya Shillings *[amount in words]* _____.

2. We undertake, if our tender is accepted, to commence the Works as soon as is reasonably possible after the receipt of the notice to commence, and to complete the whole of the Works comprised in the Contract within the time stated in the Special Conditions of Contract.

3. We agree to adhere by this tender until_____*[Insert date]*, and it shall remain binding upon us and may be accepted at any time before that date.

4. Unless and until a formal Agreement is prepared and executed, this tender together with your written acceptance thereof, shall constitute a binding Contract between us. We further understand that you are not bound to accept the lowest or any tender you may receive.

5. We, the undersigned, further declare that:
   i) *No reservations:* We have examined and have no reservations to the tender document, including Addenda issued in accordance with ITT 28;
   ii) *Eligibility:* We meet the eligibility requirements and have no conflict of interest in accordance with ITT 3 and 4;
   iii) *Tender-Securing Declaration:* We have not been suspended nor declared ineligible by the Procuring Entity based on execution of a Tender-Securing or Proposal-Securing Declaration in

the Procuring Entity's Country in accordance with ITT 19.8;

iv) *Conformity:* We offer to execute in conformity with the tendering documents and in accordance with the implementation and completion specified in the construction schedule, the following Works: *[insert a brief description of the Works];*

v) *Tender Price:* The total price of our Tender, excluding any discounts offered in item 1 above is: *[Insert one of the options below as appropriate]*

vii) *Tender Validity Period:* Our Tender shall be valid for the period specified in TDS 18.1 (as amended, if applicable) from the date fixed for the Tender submission deadline specified in TDS 22.1 (as amended, if applicable), and it shall remain binding upon us and may be accepted at any time before the expiration of that period;

viii) *Performance Security:* If our Tender is accepted, we commit to obtain a Performance Security in accordance with the Tendering document;

ix) *One Tender Per Tender:* We are not submitting any other Tender(s) as an individual Tender, and we are not participating in any other Tender(s) as a Joint Venture member or as a subcontractor, and meet the requirements of ITT 3.4, other than alternative Tenders submitted in accordance with ITT 13.3;

x) *Suspension and Debarment:* We, along with any of our subcontractors, suppliers, Project Manager, manufacturers, or service providers for any part of the contract, are not subject to, and not controlled by any entity or individual that is subject to, a temporary suspension or a debarment imposed by the Public Procurement Regulatory Authority or any other entity of the Government of Kenya, or any international organization.

xi) *State-owned enterprise or institution:* [*select the appropriate option and delete the other*] [*We are not a state-owned enterprise or institution*] / [*We are a state-owned enterprise or institution but meet the requirements of ITT 3.8*];

xii) *Commissions, gratuities, fees:* We have paid, or will pay the following commissions, gratuities, or fees with respect to the tender process or execution of the Contract: *[insert complete name of each Recipient, its full address, the reason for which each commission or gratuity was paid and the amount and currency of each such commission or gratuity]*.

Name	**Address**	**Reason**	**Amount**

(If none has been paid or is to be paid, indicate "none.")

xiii) Binding Contract: We understand that this Tender, together with your written acceptance thereof included in your Letter of Acceptance, shall constitute a binding contract between us, until a formal contract is prepared and executed;

xiv) Not Bound to Accept: We understand that you are not bound to accept the lowest evaluated cost Tender, the Most Advantageous Tender or any other Tender that you may receive;

xv) Fraud and Corruption: We hereby certify that we have taken steps to ensure that no person acting for us or on our behalf engages in any type of Fraud and Corruption;

xvi) Collusive practices: We hereby certify and confirm that the tender is genuine, non-collusive and made with the intention of accepting the contract if awarded. To this effect we have signed the "Certificate of Independent Tender Determination" attached below.

xvii) We undertake to adhere by the Code of Ethics for Persons Participating in Public Procurement and Asset Disposal, copy available from___(www.ppra.go.ke) during the procurement process and the execution of any resulting contract.

xviii) We, the Tenderer, have completed fully and signed the following Forms as part of our Tender:

a) Tenderer's Eligibility; Confidential Business Questionnaire – to establish we are not in any conflict to interest.

b) Certificate of Independent Tender Determination – to declare that we completed the tender without colluding with other tenderers.
c) Self-Declaration of the Tenderer – to declare that we will, if awarded a contract, not engage in any form of fraud and corruption.
d) Declaration and commitment to the Code of Ethics for Persons Participating in Public Procurement and Asset Disposal

Further, we confirm that we have read and understood the full content and scope of fraud and corruption as informed in **"Appendix 1- Fraud and Corruption**" attached to the Form of Tender.

Name of the Tenderer: *……[*insert complete name of person signing the Tender*]

Name of the person duly authorized to sign the Tender on behalf of the Tenderer: **……..[*insert complete name of person duly authorized to sign the Tender*]

Title of the person signing the Tender: ……[*insert complete title of the person signing the Tender*]

Signature of the person named above: [*insert signature of person whose name and capacity are shown above*] ……..**Date signed ……[***insert date of signing*] day of……. [*insert month*],…….. [*insert year*]

Date signed_____day of_____, _____

Notes

** In the case of the Tender submitted by joint venture specify the name of the Joint Venture as Tenderer*
*** Person signing the Tender shall have the power of attorney given by the Tenderer to be attached with the Tender.*

A. TENDERER'S ELIGIBILITY- CONFIDENTIAL BUSINESS QUESTIONNAIRE

Instruction to Tenderer

Tender is instructed to complete the particulars required in this Form, *one form for each entity if Tender is a JV.* Tenderer is further reminded that it is an offence to give false information on this Form.

(a) ***Tenderer's details***

	ITEM	DESCRIPTION
1	Name of the procuring entity	
2	Reference Number of the Tender	
3	Date and Time of Tender Opening	
4	Name of the tenderer	
5	Full Address and Contract Detail of the Tenderer	Country City Location Building Floor Postal Address Name and email of contact person
6	Current Trade License Registration Number and Expiring date	
7	Name, country and full address (*postal and physical addresses, email and telephone number)* of Registration Body Agency	
8	Description of Nature of Business	
9	Maximum value of business which the Tenderer handles	
10	State if Tenders Company is listed in stock exchange, give name and full address *(postal and physical addresses, email, and telephone number) of state which stock exchange*	

General and Specific Details

b) **Sole Proprietor,** provide the following details.

Name in full_____Age_____ Nationality_____

Country of Origin_____ Citizenship _____

c) **Partnership,** provide the following details.

	Names of Partners	**Nationality**	**Citizenship**	**% shares owned**
1				
2				
3				

d) **Registered Company,** provide the following details.

i) Private or public Company_____

ii) State the nominal and issued capital of the Company_____

Nominal Kenya Shillings (Equivalent)..... Issued Kenya Shillings (Equivalent).....

iii) Give details of Directors as follows.

	Names of Directors	Nationality	Citizenship	% shares owned
1				
2				
3				
4				
5				
6				
7				
8				

(e) DISCLOSURE OF INTEREST- Interest of the Firm in the Procuring Entity.

i) Are there any person/persons in …… …… …… …… …… (*Name of Procuring Entity)* who has/have an interest or relationship in this firm? Yes/No……

If yes, provide details as follows.

	Names of person	Designation in the Procuring Entity	Interest or Relationship with Tenderer
1			
2			
3			

ii) Conflict of interest disclosure

	Type of Conflict	Disclosure YES OR NO	If YES provide details of the relationship with Tenderer
1	Tenderer is directly or indirectly controls, is controlled by or is under common control with another tenderer.		
2	Tenderer receives or has received any direct or indirect subsidy from another tenderer.		
3	Tenderer has the same legal representative as another tenderer		
4	Tender has a relationship with another tenderer, directly or through common third parties, that puts it in a position to influence the tender of another tenderer, or influence the decisions of the Procuring Entity regarding this tendering process.		
5	Any of the Tenderer's affiliates participated as a consultant in the preparation of the design or technical specifications of the works that are the subject of the tender.		
6	Tenderer would be providing goods, works, non-consulting services or consulting services during implementation of the contract Specified in this Tender Document.		
7	Tenderer has a close business or family relationship with a professional staff of the Procuring Entity who are directly or indirectly involved in the preparation of the Tender document or specifications of the Contract, and/or the Tenderer Evaluation process of such contract.		
8	Tenderer has a close business or family relationship with a professional staff of the Procuring Entity who would be involved in the implementation or supervision of the Contract.		
9	Has the conflict stemming from such relationship stated in item 7 and 8 above been resolved in a manner acceptable to the Procuring Entity throughout the tendering process and execution of the Contract.		

f) Certification

On behalf of the Tenderer, I certify that the information given above is complete, current and accurate as at the date of submission.

Full Name_____

Title or Designation_____

(Signature) *(Date)*

_____ _____

B. CERTIFICATE OF INDEPENDENT TENDER DETERMINATION

I, the undersigned, in submitting the accompanying Letter of Tender to the_____ _____[Name of Procuring Entity] for: _____[Name and number of tender] in response to the request for tenders made by:_____[Name of Tenderer] do hereby make the following statements that I certify to be true and complete in every respect:

I certify, on behalf of_____[Name of Tenderer] that:

1. I have read and I understand the contents of this Certificate;

2. I understand that the Tender will be disqualified if this Certificate is found not to be true and complete in every respect;

3. I am the authorized representative of the Tenderer with authority to sign this Certificate, and to submit the Tender on behalf of the Tenderer;

4. For the purposes of this Certificate and the Tender, I understand that the word "competitor" shall include any individual or organization, other than the Tenderer, whether or not affiliated with the Tenderer, who:
   a) has been requested to submit a Tender in response to this request for tenders;
   b) could potentially submit a tender in response to this request for tenders, based on their qualifications, abilities or experience;

5. The Tenderer discloses that [check one of the following, as applicable:
   a) The Tenderer has arrived at the Tender independently from, and without consultation, communication, agreement or arrangement with, any competitor;
   b) the Tenderer has entered into consultations, communications, agreements or arrangements with one or more competitors regarding this request for tenders, and the Tenderer discloses, in the attached document(s), complete details thereof, including the names of the competitors and the nature of, and reasons for, such consultations, communications, agreements or arrangements;

6. In particular, without limiting the generality of paragraphs (5)(a) or (5)(b) above, there has been no consultation, communication, agreement or arrangement with any competitor regarding:
   a) prices;
   b) methods, factors or formulas used to calculate prices;
   c) the intention or decision to submit, or not to submit, a tender; or
   d) the submission of a tender which does not meet the specifications of the request for Tenders; except as specifically disclosed pursuant to paragraph (5)(b) above;

7. In addition, there has been no consultation, communication, agreement or arrangement with any competitor regarding the quality, quantity, specifications or delivery particulars of the works or services to which this request for tenders relates, except as specifically authorized by the procuring authority or as specifically disclosed pursuant to paragraph (5)(b) above;

8. the terms of the Tender have not been, and will not be, knowingly disclosed by the Tenderer, directly or indirectly, to any competitor, prior to the date and time of the official tender opening, or of the awarding of the Contract, whichever comes first, unless otherwise required by law or as specifically disclosed pursuant to paragraph (5)(b) above.

Name_____ Title_ Date _____

*[Name, title and signature of authorized agent of Tenderer and Date].*_____

C. SELF - DECLARATION FORMS

FORM SD1

SELF DECLARATION THAT THE PERSON/TENDERER IS NOT DEBARRED IN THE MATTER OF THE PUBLIC PROCUREMENTAND ASSET DISPOSALACT 2015.

I, ……., of Post Office Box …….……. being a resident of …….. in the Republic of ……. do hereby make a statement as follows: -

1. THAT I am the Company Secretary/ Chief Executive/Managing Director/Principal Officer/Director of ……...…….. *(insert name of the Company)* who is a Bidder in respect of Tender No. KeRRA/……..….. for ……. *(insert tender name/description)* for …….……. *(insert name of the Procuring entity)* and duly authorized and competent to make this statement.

2. THAT the aforesaid Bidder, its Directors and subcontractors have not been debarred from participating in procurement proceeding under Part IV of the Act.

3. THAT what is deponed to herein above is true to the best of my knowledge, information and belief.

…….……. …… (Title)
(Signature) (Date)

Bidder Official Stamp

FORM SD2

SELF DECLARATION THAT THE PERSON/TENDERER WILL NOT ENGAGE IN ANY CORRUPT OR FRAUDULENT PRACTICE

I, ……. of P. O. Box …….....……. being a resident of …… in the Republic of ……. do hereby make a statement as follows: -

1. THAT I am the Chief Executive/Managing Director/Principal Officer/Director of ……..... *(insert name of the Company)* who is a Bidder in respect of Tender No. ….....…… for …….. *(insert tender name/description)* for …… *(Insert name of the Procuring entity)* and duly authorized and competent to make this statement.

2. THAT the aforesaid Bidder, its servants and/or agents /subcontractors will not engage in any corrupt or fraudulent practice and has not been requested to pay any inducement to any member of the Board, Management, Staff and/or employees and/or agents of …….... *(insert name of the Procuring entity)* which is the procuring entity.

3. THAT the aforesaid Bidder, its servants and/or agents /subcontractors have not offered any inducement to any member of the Board, Management, Staff and/or employees and/or agents of ……..……. (*insert name of the Procuring entity*)

4. THAT the aforesaid Bidder will not engage /has not engaged in any corrosive practice with other bidders participating in the subject tender

5. THAT what is deponed to herein above is true to the best of my knowledge information and belief.

……	…….....	.....……
(Title)	(Signature)	(Date)

Bidder's Official Stamp

DECLARATION AND COMMITMENT TO THE CODE OF ETHICS

I …….....……. (person) on behalf of *(Name of the Business/ Company/Firm*) ……. declare that I have read and fully understood the contents of the Public Procurement & Asset Disposal Act, 2015, Regulations and the Code of Ethics for persons participating in Public Procurement and Asset Disposal and my responsibilities under the Code.

I do hereby commit to abide by the provisions of the Code of Ethics for persons participating in Public Procurement and Asset Disposal.

Name of Authorized signatory……..... Sign…….....

Position…….....

Office address …… Telephone…….....…….

E-mail: …….....….....…

Name of the Firm/Company: …….....……

Date…….....…

(Company Seal/ Rubber Stamp where applicable)

Witness

Name ……..... Sign.....

Date……

D. APPENDIX 1- FRAUD AND CORRUPTION

(Appendix 1 shall not be modified)

1. Purpose

The Government of Kenya's Anti-Corruption and Economic Crime laws and their sanction's policies and procedures, Public Procurement and Asset Disposal Act *(no. 33 of 2015)* and its Regulation, and any other Kenya's Acts or Regulations related to Fraud and Corruption, and similar offences, shall apply with respect to Public Procurement Processes and Contracts that are governed by the laws of Kenya.

2. Requirements

The Government of Kenya requires that all parties including Procuring Entities, Tenderers, (applicants/proposers), Consultants, Contractors and Suppliers; any Sub-contractors, Sub-consultants, Service providers or Suppliers; any Agents (whether declared or not); and any of their Personnel, involved and engaged in procurement under Kenya's Laws and Regulation, observe the highest standard of ethics during the procurement process, selection and contract execution of all contracts, and refrain from Fraud and Corruption and fully comply with Kenya's laws and Regulations as per paragraphs 1.1 above.

Kenya's public procurement and asset disposal act *(no. 33 of 2015)* under Section 66 describes rules to be followed and actions to be taken in dealing with Corrupt, Coercive, Obstructive, Collusive or Fraudulent practices, and Conflicts of Interest in procurement including consequences for offences committed. A few of the provisions noted below highlight Kenya's policy of no tolerance for such practices and behavior: -

1) a person to whom this Act applies shall not be involved in any corrupt, coercive, obstructive, collusive or fraudulent practice; or conflicts of interest in any procurement or asset disposal proceeding;
2) A person referred to under subsection (1) who contravenes the provisions of that sub-section commits an offence;
3) Without limiting the generality of the subsection (1) and (2), the person shall be: -
   a) disqualified from entering into a contract for a procurement or asset disposal proceeding; or
   b) if a contract has already been entered into with the person, the contract shall be voidable;
4) The voiding of a contract by the procuring entity under subsection (7) does not limit any legal remedy the procuring entity may have;
5) An employee or agent of the procuring entity or a member of the Board or committee of the procuring entity who has a conflict of interest with respect to a procurement: -
   a) shall not take part in the procurement proceedings;
   b) shall not, after a procurement contract has been entered into, take part in any decision relating to the procurement or contract; and

c) shall not be a subcontractor for the bidder to whom was awarded contract, or a member of the group of bidders to whom the contract was awarded, but the subcontractor appointed shall meet all the requirements of this Act.

6) An employee, agent or member described in subsection (1) who refrains from doing anything prohibited under that subsection, but for that subsection, would have been within his or her duties shall disclose the conflict of interest to the procuring entity;
7) If a person contravenes subsection (1) with respect to a conflict of interest described in subsection (5)(a) and the contract is awarded to the person or his relative or to another person in whom one of them had a direct or indirect pecuniary interest, the contract shall be terminated and all costs incurred by the public entity shall be made good by the awarding officer. Etc.

In compliance with Kenya's laws, regulations and policies mentioned above, the Procuring Entity:

a) Defines broadly, for the purposes of the above provisions, the terms set forth below as follows:
   i) "corrupt practice" is the offering, giving, receiving, or soliciting, directly or indirectly, of anything of value to influence improperly the actions of another party;
   ii) "fraudulent practice" is any act or omission, including misrepresentation, that knowingly or recklessly misleads, or attempts to mislead, a party to obtain financial or other benefit or to avoid an obligation;

iii) "collusive practice" is an arrangement between two or more parties designed to achieve an improper purpose, including to influence improperly the actions of another party;

iv) "coercive practice" is impairing or harming, or threatening to impair or harm, directly or indirectly, any party or the property of the party to influence improperly the actions of a party;

v) "obstructive practice" is:

- deliberately destroying, falsifying, altering, or concealing of evidence material to the investigation or making false statements to investigators in order to materially impede investigation by Public Procurement Regulatory Authority (PPRA) or any other appropriate authority appointed by Government of Kenya into allegations of a corrupt, fraudulent, coercive, or collusive practice; and/or threatening, harassing, or intimidating any party to prevent it from disclosing its knowledge of matters relevant to the investigation or from pursuing the investigation; or
- acts intended to materially impede the exercise of the PPRA's or the appointed authority's inspection and audit rights provided for under paragraph 2.3 e. below.

b) Defines more specifically, in accordance with the above procurement Act provisions set forth for fraudulent and collusive practices as follows:

"fraudulent practice" includes a misrepresentation of fact in order to influence a procurement or disposal process or the exercise of a contract to the detriment of the procuring entity or the tenderer or the contractor, and includes collusive practices amongst tenderers prior to or after tender submission designed to establish tender prices at artificial non-competitive levels and to deprive the procuring entity of the benefits of free and open competition.

c) Rejects a proposal for award[1] of a contract if PPRA determines that the firm or individual recommended for award, any of its personnel, or its agents, or its sub-consultants, sub-contractors, service providers, suppliers and/ or their employees, has, directly or indirectly, engaged in corrupt, fraudulent, collusive, coercive, or obstructive practices in competing for the contract in question;

d) Pursuant to the Kenya's above stated Acts and Regulations, may sanction or recommend to appropriate authority (ies) for sanctioning and debarment of a firm or individual, as applicable under the Acts and Regulations;

e) Requires that a clause be included in Tender documents and Request for Proposal documents requiring (i) Tenderers (applicants/proposers), Consultants, Contractors, and Suppliers, and their Sub-contractors, Sub-consultants, Service providers, Suppliers, Agents personnel, permit the PPRA or any other appropriate authority appointed by Government of Kenya to inspect[2] all accounts, records and other documents relating to the procurement process, selection and/or contract execution, and to have them audited by auditors appointed by the PPRA or any other appropriate authority appointed by Government of Kenya; and

f) Pursuant to Section 62 of the above Act, requires Applicants/Tenderers to submit along with their Applications/Tenders/Proposals a "Self-Declaration Form" as included in the procurement document declaring that they and all parties involved in the procurement process and contract execution have not engaged/will not engage in any corrupt or fraudulent practices.

---

[1] *For the avoidance of doubt, a party's ineligibility to be awarded a contract shall include, without limitation, (i) applying for pre-qualification, expressing interest in a consultancy, and tendering, either directly or as a nominated sub-contractor, nominated consultant, nominated manufacturer or supplier, or nominated service provider, in respect of such contract, and (ii) entering into an addendum or amendment introducing a material modification to any existing contract.*

[2] *Inspections in this context usually are investigative (i.e., forensic) in nature. They involve fact-finding activities undertaken by the Investigating Authority or persons appointed by the Procuring Entity to address specific matters related to investigations/audits, such as evaluating the veracity of an allegation of possible Fraud and Corruption, through the appropriate mechanisms. Such activity includes but is not limited to: accessing and examining a firm's or individual's financial records and information, and making copies thereof as relevant; accessing and examining any other documents, data and information (whether in hard copy or electronic format) deemed relevant for the investigation/audit, and making copies thereof as relevant; interviewing staff and other relevant individuals; performing physical inspections and site visits; and obtaining third party verification of information.*

FORM OF TENDER SECURITY (TENDER BOND)

[The Surety shall fill in this Tender Bond Form in accordance with the instructions indicated.]

BOND NO. _____

1. BY THIS BOND *[name of tenderer]* as Principal (hereinafter called "the Principal"), and *[name, legal title, and address of surety]*,**authorized to transact business in** *[name of country of* Procuring Entity*]*, as Surety (hereinafter called "the Surety"), are held and firmly bound unto *[name of* Procuring Entity*]* as Obligee (hereinafter called "the Procuring Entity") in the sum of *[amount of Bond][amount in words]*, for the payment of which sum, well and truly to be made, we, the said Principal and Surety, bind ourselves, our successors and assigns, jointly and severally, firmly by these presents.

2. WHEREAS the Principal has submitted or will submit a written Tender to the Procuring Entity dated the____day of_____, 20 , for the supply of *[name of Contract]* (hereinafter called the "Tender").

3. NOW, THEREFORE, THE CONDITION OF THIS OBLIGATION is such that if the Principal:
   a) has withdrawn its Tender during the period of Tender validity set forth in the Principal's Letter of Tender ("the Tender Validity Period"), or any extension thereto provided by the Principal; or
   b) having been notified of the acceptance of its Tender by the Procuring Entity during the Tender Validity Period or any extension thereto provided by the Principal; (i) failed to execute the Contract agreement; or
   (ii) has failed to furnish the Performance Security, in accordance with the Instructions to tenderers ("ITT") of the Procuring Entity's Tendering document.

   Then the Surety undertakes to immediately pay to the Procuring Entity up to the above amount upon receipt of the Procuring Entity's first written demand, without the Procuring Entity having to substantiate its demand, provided that in its demand the Procuring Entity shall state that the demand arises from the occurrence of any of the above events, specifying which event(s) has occurred.

4. The Surety hereby agrees that its obligation will remain in full force and effect up to and including the date 30 days after the date of expiration of the Tender Validity Period set forth in the Principal's Letter of Tender or any extension thereto provided by the Principal.

5. IN TESTIMONY WHEREOF, the Principal and the Surety have caused these presents to be executed in their respective names this_____day of_____20_____.

Principal:_____ Corporate Seal Surety _____

_____ _____

(Signature) *(Signature)*

(Printed name and title) *(Printed name and title)*

TENDER-SECURING DECLARATION FORM

[The Bidder shall complete this Form in accordance with the instructions indicated]

Date:.....*[insert date (as day, month and year) of Tender Submission]*

Tender No.:..... ....*[insert number of tendering process]*

To:..... ....*[insert complete name of Purchaser]* I/We, the undersigned, declare that:

1. I/We understand that, according to your conditions, bids must be supported by a Tender-Securing Declaration.

2. I/We accept that I/we will automatically be suspended from being eligible for tendering in any contract with the Purchaser for the period of time of …….(insert months) months starting on the date of tender award or date of termination, if we are in breach of our obligation(s) under the bid conditions, because we –

   (a) have withdrawn our tender during the period of tender validity specified by us in the Tendering Data Sheet; or

   (b) having been notified of the acceptance of our Bid by the Purchaser during the period of bid validity,

      (i) fail or refuse to execute the Contract, if required, or

      (ii) fail or refuse to furnish the Performance Security, in accordance with the instructions to tenders.

3. I/We understand that this Tender Securing Declaration shall expire if we are not the successful Tenderer(s), upon the earlier of:

   a) our receipt of a copy of your notification of the name of the successful Tenderer; or

   b) Thirty (30) days after the expiration of our Tender.

4. I/We understand that if I am/we are/in a Joint Venture, the Tender Securing Declaration must be in the name of the Joint Venture that submits the bid, and the Joint Venture has not been legally constituted at the time of bidding, the Tender Securing Declaration shall be in the names of all future partners as named in the letter of intent.

Signed:……..……....…..

Capacity / title (director or partner or sole proprietor, etc.) …….…….....……

Name: ……..

Duly authorized to sign the bid for and on behalf of: *[insert complete name of Tenderer]*

Dated on ……. day of …….……. *[Insert date of signing]* Seal or stamp

Appendix to Tender

Schedule of Currency requirements

Summary of currencies of the Tender for_____*[insert name of Section of the Works]*

Name of Currency	Amounts payable
Local Currency (KShs)	
Provisional sums expressed in local currency	[*to be entered by the Procuring Entity]*

TECHNICAL PROPOSAL

The tender shall complete these sections as a Technical proposal to indicate how he/she intends to proceed with the works. The Procuring entity will review these Proposals and determine the extent to which they meet the required standards to complete the works.

Site Organization

[insert Site Organization information]

Method Statement

[insert Method Statement]

Mobilization Schedule

[insert Mobilization Schedule]

Construction Schedule

[insert Construction Schedule]

PART 2 - WORKS' REQUIREMENTS

PART II - WORK REQUIREMENTS

SECTION V - DRAWINGS

A list of drawings should be inserted here. The actual drawings including Site plans should be annexed in a separate booklet.

SECTION VI - SPECIFICATIONS

CONTENTS:

SPECIFICATIONS FOR ROUTINE MAINTENANCE WORKS…… A-3

STANDARD SPECIFICATION…… A-3

SECTION 01 PRELIMINARY AND GENERAL ITEMS…… A-4
01-40-001 Mobilisation, Establishment and Demobilisation from Site…… A-4
01-40-002 Clearance on Completion……. A-4
01-40-006 Traffic Control……. A-4
01-40-007 Drinking Water…… A-5
SECTION 04: ROADSIDE CLEARANCE…… A-5
04-50-002 Grass Cutting (Manual)……. ` A-5
04-50-003 Bush Clearing - Heavy……..…… A-6
04-50-004 Bush Clearing - Light…….. A-6
04-50-008 Clearing of Obstructions…….. A-6
04-50-005 Pruning Tree Branches…… A-6
SECTION 05: EARTHWORKS……. A-7
05-70-001 Grassing ……. A-7
SECTION 08: CULVERT AND DRAINAGE WORKS……..……. A-8
08-50-002 Ditch Cleaning (Manual)…….……. A-8
08-60-001/2/3/4/5 Culvert Cleaning (Partially blocked)…… A-9
08-60-001 300 mm dia…… A-9
08-60-002 450 mm dia……. ….. A-9
08-60-003 600 mm dia……. ….. A-9
08-60-004 900 mm dia……. ….. A-9
08-60-005 1200 mm dia…….. A-9
08-60-006/7/8/9/10 Desilting Culverts/Structures inlet/outlets (Fully blocked)…….. A-10
08-60-006 300 mm dia……. A-10
08-60-007 450 mm dia……. A-10
08-60-008 600 mm dia…….

A-10
08-60-009 900 mm dia…….
A-10
08-60-010 1200mm dia…….
A-10
08-70-001 Headwall Repair Masonry…… A-10
08-70-002 Headwall Repair - Concrete……..……. A-11
08-70-008 Scour Check Repair - masonry ……. A-11
08-70-009 Scour Check Repair - wooden…… A-11
08-70-010 Scour Check Repair - concrete…….. A-11
08-70-011 Stone Pitching Repair……..
A-11
08-80-004 Drift Maintenance - desilting…… A-12
08-80-005 Drift Repairs - Concrete……
A-13
SECTION 10: CARRIAGEWAY REPAIR WORKS…… A-13
10-50-006 Light Manual Reshaping (Potholes, Ruts and Gullies…..…… A-13
10-50-009 Light Manual Reshaping (Grub edge and Reshape carriageway… A-14
SECTION 11: SHOULDER MAINTENANCE AND REPAIR…….
A-16
11-50-001 Shoulder Grading……..
A-16
SECTION 15: PAVED CARRIAGEWAY MAINTENANCE……. A-17
15-50-001 Pothole Patching - hot mix…….
A-17
15-50-002 Pothole Patching - cold mix……
A-17
15-50-004 Road Edge Repairs……
A-18
15-60-001 Spot Sealing – (Fine Cracks)…….……..
A-18
15-60-002 Crack Sealing…….
A-19
15-80-001/005 Base Repairs……..
A-19
SECTION 17: BRIDGE MAINTENANCE…… A-22
17-50-001 Cleaning and Clearing Deck……
A-22
17-50-002 Cleaning and Clearing – Riverbed…… A-22
SECTION 20: ROAD FURNITURE REPAIR AND MAINTENANCE……. A-23
20-50-001 Traffic Sign Maintenance…… A-23
20-50-003 Guardrail Repair……
A-24
20-50-004 Marker Posts Replacement…… A-24
20-50-006 Sign Cleaning and Repairing……. A-24
SECTION 25: HIV/AIDS AWARENESS AND PREVENTION CAMPAIGN……. A-25
25-50-001 HIV/AIDS Awareness Campaign……. A-25
25-50-002 Aids Prevention Campaign……... A-25

SPECIFICATIONS FOR ROUTINE MAINTENANCE WORKS

Standard Specification

Whenever reference is made to "The Engineer" in the specification, it shall be construed to be synonymous with "Employer's duly authorised Representative" as referred to in the Conditions of Contract.

SECTION 01 : PRELIMINARY AND GENERAL ITEMS

Scope:

This section refers to those items that are needed at the start and end of the works or are provisional items applicable for the duration of the Works.

01-40- 001: Mobilisation and Establishment of Site

The Contractor shall provide all equipment, tools, material and temporary stores required to carry out the required works.

The Contractor shall ensure that all possible means of protection are given to the staff at all times. Such protection shall include provision of high visibility clothing or vests for the workforce, in potentially dangerous locations. The Contractor shall also maintain first aid kits with items included on the advice of the local Medical Officer, or as directed by the Engineer.

Measurement and Payment

No separate payment shall be made for this item. The Contractor shall include the costs in the other rates for other measured items.

01-40-002 Clearance on Completion

On Completion of the Works, all temporary stores, equipment, signs and tools shall be removed from the site, and the Site left in good order to the satisfaction of the Engineer.

Measurement and Payment

The Lump Sum payment shall be made upon the approval of the Engineer that the Clearance has been satisfactorily carried out.

01-40-006 Traffic Control

The Contractor shall provide warning signs, fences, barriers, detours, which shall be properly positioned well in advance so that all traffic is well and safely accommodated for the duration of the Works.

Traffic signs and other traffic control facilities shall be kept in good condition and located in positions where they are visible to road users.

Work Method

The Contractor shall use **Labour** to carry out this item of work

Quality Control

The Engineer shall check regularly that traffic control measures are satisfactory.

Measurement and Payment

A Lump Sum shall be paid on a Monthly basis upon the approval of the Engineer that adequate Traffic Control is in place

01–40–007 Drinking Water

The Contractor shall provide safe drinking water on site for workers at a reasonable distance from all work locations, for the duration of the Works.

Quality Control

The Engineer shall check regularly that adequate supplies of water are available throughout the Site.

Measurement and Payment

A Lump Sum shall be paid on a Monthly basis upon the approval of the Engineer that adequate supplies have been provided.

SECTION 04: ROADSIDE CLEARANCE

Scope

This section covers all routine maintenance works within the road reserve and includes items such as bush clearing, pruning of tree branches, grass cutting, and removal of litter and any other debris.

04–50–002: Grass Cutting (Manual)

Grass shall be defined as any form of plant growth including small shrubs having a girth of not more than 100mm measured at height of 200mm above ground level.

The grass shall be cut to height of not more than 50 mm above the ground. The width limits shall be as instructed by the Engineer. All cut grass shall be removed from the carriageway, side drains, mitre drains and inlets and outlet drains of structures/culverts and deposited in approved spoil dumps

Burning of the grass shall not be allowed and care shall be taken not to damage roadside fixtures such as signs and marker posts.

This activity shall be carried out twice, each time before the rainy season or as shall be instructed by the Engineer.

Work Method

The Contractor shall use **Labou**r to carry out this item of work.

Quality Control

The road width for grass cutting shall be measured at 50-m intervals and shall be free of grass after the operation.

Measurement: m^2

The measurement shall be area of grass cut, based on the standard width and measured length of clearing.

Payment

The unit rate shall be full compensation, for labour, materials, tools, and incidental costs required to carry out the work.

04-50-003 Bush Clearing - heavy
04-50-004 Bush Clearing - light
04-50-005 Pruning Tree Branches

This activity involves the removal of small trees, shrubs and bushes all including their root systems, In addition, the Engineer may order the trimming of branches of large trees to improve visibility. The width limits shall be as instructed by the Engineer.

The cut material shall be collected into heaps away from the side drains and where it shall not block or interfere with visibility.

The burning of cut bush and removed trees or branches shall not be allowed.

Work Method

The contractor shall use **Labour** to carry out this item of work

Quality Control

The width for bush clearing shall be measured at 50-m intervals and shall be free of trees or bushes.

Measurement Unit: m^2

The measurement shall be the area cleared according to the specified widths and measured length of clearance.

Payment

The unit rate shall be the full compensation, for labour, materials, tools, and incidental costs required to carry out the work.

04–50–008: Clearing of Obstructions

This activity shall involve the following tasks:-

- Inspection of the road section(s) regularly
- Removal of all obstructions such as fallen trees/ branches, rock fall, landslides and broken signs away from the road, side drains, mitre drains and other drains, inlets and outlets of drifts, culverts and other structures and the safe disposal thereof outside the road formation width.
- Removal of dead animals' carcasses away for the carriageway and disposing of them as directed by the Engineer. Liaison with the Police may be necessary.

Work Method

The Contractor shall use **Labour** to carry out this item of work

Quality Control

The road section shall be free of any obstruction.

Measurement Unit: Provisional Sum

The measurement for this item shall be a Provisional Sum paid as necessary on a Dayworks basis.

Payment

The unit rate shall be the full compensation for the provision of labour, tools and incidental costs necessary to carry out the tasks.

SECTION 05: EARTHWORKS

05-70- 001: Grassing

This activity involves the protection / repair of erosion on embankment slopes, cut faces, shoulders, and side slopes by filling with suitable soils and compacting using appropriate tamping tools as instructed by the Engineer.

The Contractor shall plant sprigs of approved indigenous 'runner' type grass. The Contractor shall care for and water the grass until it is firmly established.

Work Method
The Contractor shall use **Labour** to carry out this item of work.

Quality Control

- The width of the slope shall be measured at 50m intervals and shall have maximum tolerances of + / - 100mm.
- The quality of grass and spacing of the sprigs shall be as directed by the Engineer

Measurement Unit m^2

The unit of measurement shall be area calculated as the net area, measured on the slope.

Payment

The unit rate shall be full compensation, for labour, materials, tools, and incidental costs required to carry out the work.

SECTION 08: CULVERT AND DRAINAGE WORKS

Scope:
This section covers all routine maintenance of the drainage system including the cleaning or desilting of the side drains, mitre drains, catch water drains, culverts, inlets and outlets, and scour checks.

08-50-002 Ditch Cleaning (Manual) - Partially Silted
08-50-003 - Fully Silted

i. Partially silted

Partially silted drains are those that are less than half silted and require only cleaning.

All deposited material, debris, and vegetation shall be removed and the drain shaped to the original cross-section and left in a free-draining condition. Suitable material may be used to fill depressions and potholes on the carriageway. All debris and other unsuitable material removed from the side drains shall be disposed of well clear of the drainage system in approved spoil dumps where it will not cause any obstruction or be washed back.

The side drains, mitre drains and catchwater drains shall be cleaned before the onset of the rains or as directed by the Engineer.

Work Method
The Contractor shall use **Labour** to carry out this item of work

Quality Control

- Appropriate drain templates shall be used to check and control the dimensions of the drains.
- The longitudinal profile of the drains shall be checked using boning rods, to ensure free flow.

Measurement Unit: m

The measurement shall be the length of drain desilted or cleaned to the specified cross-section.

Payment

The unit rate shall be full compensation, for labour, tools, and incidental costs required to carry out the work.

ii. Fully silted

Fully silted drains shall be those that are greater than half-silted and require re-excavation or reshaping.

All deposited material, debris, and vegetation shall be removed and the drain shaped to the original cross-section and left in a free-draining condition. Suitable material may be used to fill depressions and potholes on the carriageway. All debris and other unsuitable material removed from the side drains shall be disposed of well clear of the drainage system in approved spoil dumps where it will not cause any obstruction or be washed back.

The side drains shall be desilted or re-excavated before the onset of the rains, or as directed by the Engineer.
Work Method

The Contractor shall use **Labour** to carry out this item of work
Quality Control

- Appropriate drain templates shall be used to check and control the dimensions of the drains.
- The longitudinal profile of the drains shall be checked using boning rods, to ensure free flow.

Measurement Unit: m^3
The measurement shall be the volume of drain re-excavated or re-shaped to the specified cross-section.

Payment

The unit rate shall be full compensation for labour, tools, and incidental costs required to carry out the work.

08- 60 - 001/2/3/4/5: Culverts Cleaning (Partially blocked)

08 - 60 - 001 300mm dia;
08 - 60 - 002 450mm dia;
08 - 60 - 003 600mm dia;
08 - 60 - 004 900mm dia;
08 - 60 - 005 1200mm dia
This activity involves the cleaning of culverts of specified sizes including pipe barrels, the outlet/inlet structures, and the outlet drains, keeping them free of all debris, weed, silt and any obstruction to ensure free passage of water at all times. The debris shall be deposited in approved spoil dumps as directed by the Engineer

Partially blocked culverts shall be those with less than half of the barrel blocked.

Correct widths and slopes of the outlet drains shall be maintained. The gradient of the outlet drain shall be not less than 2 %.
All broken culvert barrels discovered in the course carrying out this activity shall be reported to the Engineer.
This activity shall be carried out before the rains, or as directed by the Engineer.
Work Method
The Contractor shall use **Labour** to carry out this item of work
Quality Control
The culverts shall be checked as free of debris to the satisfaction of the Engineer.
MeasurementUnit: **m**
The measurement shall be the length of culvert, including the outlet drain, cleaned

Payment

The unit rate shall be full compensation for labour, tools and incidental costs required to carry out the work.

08- 60 - 006/7/8/9/10 : Culvert Cleaning (Fully blocked):

08 - 60 - 006 300mm dia;
08 - 60 - 007 450mm dia;
08 - 60 - 008 600mm dia;
08 - 60 - 009 900mm dia;
08 - 60 - 010 1200mm dia
This activity involves the cleaning of culverts of specified sizes including pipe barrels, the outlet/inlet structures, and the outlet drains, keeping them free of all debris, weed, silt and any obstruction to ensure free passage of water at all times. The debris shall be deposited in approved spoil dumps as directed by the Engineer

Fully blocked culvert shall be those with greater than half of the barrel blocked.

Correct widths and slopes of the outlet drains shall be maintained. The gradient of the outlet drain shall be not less than 2 %.

All broken culvert barrels discovered in the course of carrying out this activity shall be reported to the Engineer.

This activity should be carried out before the onset of the rains, or as directed by the Engineer.

Work Method
The Contractor shall use **Labour** to carry out this item of work.
Quality Control
The culverts shall be checked as free from debris, to the satisfaction of the Engineer.

MeasurementUnit: m
The measurement shall be the length of culvert, including the outlet drain cleaned.
Payment

The unit rate shall be full compensation for labour, tools and incidental costs required to carry out the work.

08- 70- 001: Head Wall Repair - Masonry

This activity involves the repairs to damaged head walls and wing walls built in masonry.

Where directed by the Engineer, the masonry walls shall be inspected and loose or missing stone re-secured or replaced. Damaged pointing shall be repaired with cement mortar 1:4 and finished flush with the stonework.

Work Method

The Contractor shall use **Labour** to carry out this item of work
Quality Control

- The stability of the walls and the pointing shall be to the satisfaction of the Engineer.

Measurement Unit: No

The measurement shall be the number of walls repaired as directed by the Engineer.

Payment

The unit rate shall be full compensation for labour, materials, tools, and incidental costs required to carry out the work.

08-70-002 Headwall Repair - Concrete

The activity involves the repairs to damaged concrete headwalls and wing walls, and to inlet/outlet concrete aprons. Concrete walls shall be inspected and repair works carried out as instructed by the Engineer to include breaking out and replacement of damaged concrete with similar material, and the rendering of open texture areas with cement mortar 1:4. Broken wall sections shall be re-built in 20/20 (1:2:4) concrete within formwork erected on the correct lines and levels in accordance with the Standard Drawings. Areas of new concrete and mortar shall be protected from direct sunlight and kept moist for 3 days.

Quality Control

The work shall be carried out to the satisfaction of the Engineer.

Measurement Unit: No

The measurement shall be the number of walls/aprons repaired.

Payment

The unit shall be full compensation for labour, materials, tools, and incidental costs required to carry out the work.

08 - 70 - 008: Scour Check Repair - masonry
08 - 70 - 009: Scour Check Repair - wooden
08 - 70 - 010: Scour Check Repair - concrete

This activity involves the repair of Scour Checks using stones or wooden stakes or concrete. The construction details shall be shown in the Drawings or as instructed by the Engineer.

Scour checks shall be inspected and the repairs carried out as directed by the Engineer, which shall include replacement of missing or broken stonework and stakes; and the repair of damaged concrete, to the original lines, levels, and Specifications.
Work Method
The Contractor shall use **Labour** to carry out this item work.

Quality Control

The sizes of the stakes and stones used shall be as the original construction.
The shape of the scour check shall be checked using the scour check template.
Measurement: No.

The unit rate of measurement shall be the number of scour checks repaired.

Payment

The unit rate shall be full compensation, for labour, tools, materials, and incidental costs required for carrying out the work.

08- 70- 011 Stone Pitching Repair

This activity involves the repair of stone pitching on slopes, in inlet/outlet aprons and access drifts. The stone

pitching shall be inspected and repairs carried out as directed by the Engineer, including the replacement and re-bedding of missing or loose stones; the repair of mortar jointing: and the cleaning out of weepholes, as required. All work shall be to the lines and levels of the original construction with new stonework and mortar being flush with the adjacent materials.

Work Method

The Contractor shall use **Labour** to carry out this work
Quality Control
The work shall be carried out to the satisfaction of the Engineer.

Measurement Unit: m^2

The measurement shall be the net surface area of the repairs.

Payment

The unit rate shall be full compensation, for labour, tools, materials, and incidental costs required to carry out the work.

08- 80- 004 Drift Maintenance – desilting

This activity involves the removal of debris, silt and any vegetation from drifts and causeways. The debris shall be deposited away from the drift in approved spoil dumps.

This activity shall be carried before the rains, or as directed by the Engineer.

Work Method

The Contractor shall use **Labour** to carry out this item of work
Quality Control
The work shall be carried out to the satisfaction of the Engineer.

Measurement Unit: m^3

The measurement shall be the volume of debris or silt removed calculated as the product of length , width and measured depth of the affected section of drift.

Payment

The unit rate shall be full compensation for labour, tools, and incidental costs required to carry out the work.

08-80-005 Drift Repairs – Concrete

This activity involves the repair of concrete drifts, including the removal of loose or broken concrete, cutting back damaged areas to sound surfaces and repairing with concrete of similar Class to the original.

The drift shall be inspected and necessary repairs shall be instructed by the Engineer. Holes and voids shall be cleared of debris, loose material and dust, and shall be well watered before the new concrete is placed. The new concrete shall be firmly rammed against the existing surfaces and finished flush with the surrounding materials. The surface of the repair shall be protected from direct sunlight and kept moist for 3 days. Concrete shall be Class 20/20 unless otherwise directed by the Engineer.

Quality Control

The work shall be carried out to the satisfaction of the Engineer.

Measurement Unit: m^3

The measurement shall be the volume of concrete used for the repair.

Payment:

The unit rate shall be the full compensation for labour, tools, materials and incidental costs required to carry out the work.

SECTION 10: CARRIAGEWAY REPAIR WORKS (GRAVEL)

Scope:
This section covers all routine maintenance works on the gravel carriageway and includes items such as pothole patching, and reshaping of the carriageway, using labour.

10- 50- 006 Light Manual Reshaping (Potholes, Ruts and Gullies)

Description:
This activity involves the removal of all unsuitable/degraded material from the pothole, rut or gully until firm ground is reached, and filling with approved material and ensuring that the area is free draining.

For earth roads material from the side drains may be used.

For gravel roads the gravel shall be obtained from the stacks placed at intervals along the road for this purpose.

The fill material shall be watered, mixed and compacted using suitable tampers to a finished level 25mm above the surrounding road surface.

This activity shall be carried out before and after the rains, or as directed by the Engineer.

Work Method
The Contractor shall use **Labour** to carry out this work

Quality Control

- The quality of fill material shall be approved by the Engineer
- The minimum compaction to be applied shall be such that no rammer imprint on the surface shall be seen.

Measurement Unit: m^3
The measurement shall be total volume of materials used for the repairs.

Payment

The unit rate shall include full compensation for labour, tools, materials, and incidental costs necessary to carry out the work.

10- 50- 009: Light Manual Reshaping (Grub edge and Reshape Carriageway)

Description:

This activity involves trimming the edge of the carriageway, grubbing grass from the carriageway and reshaping of the camber of the road to the original standard and shape. No grass shall be grubbed from the shoulders, but it shall be cut to a maximum height of 50mm.

For earth roads materials from the side drains may be used to reshape the carriageway. Where additional suitable material is required to reinstate the camber to the required shape, this material shall be obtained from approved sources nearest to the final deposition area.

Work Method

The Contractor shall apply **Labour** methods to carry out this item.
Quality Control

- The width of the carriageway including the shoulders shall be checked at 100m intervals with tolerance of +50mm or -20mm
- The camber shall be checked using camber board at 50m intervals and shall have a tolerance of +/- 1%

Measurement Unit: m^2

The measurement shall be the area of carriageway shaped.
Payment

The unit rate shall be the full compensation for labour, tools and incidental costs required for carrying out the work.

SECTION 11: SHOULDER MAINTENANCE AND REPAIR

11-50-001: Shoulder Grading

Where directed by the Engineer the Contractor shall reinstate or re-form the shoulders of the road using either a Towed or Motor grader.

Pegs 400 to 500mm long shall be placed at 10 to 20 m intervals on the edge of the carriageway. Suitable material from the front slope of the side drain shall be bladed and spread on the shoulders (and, if appropriate the carriageway), unless otherwise directed by the Engineer, and the shoulders re-formed to the cross-section dimensions, as shown in Table 10.2. Compaction shall be achieved with the wheels of the equipment used, or by other approved means.
Table 10.2: Overall width ditch

Road Category	**Carriageway width**	**Overall width to front of Ditches**
A/B/C + Secondary Roads	6.0 m	8.4 m
D/E + Minor Roads	5.4 m	7.8 m
RAR Roads	4.5 m	6.5 m
Minor/RAR roads with insufficient widths or Temporary	3.5 m	5.5 m

Work Method
The Contractor shall use Equipment to carry out this item.
Measurement Unit: km
The measurement shall be the length of shoulder reformed.
Payment
The unit rate shall be the full compensation for labour, tools, equipment and incidental costs required for carrying out the work.

SECTION 15: PAVED CARRIAGEWAY MAINTENANCE

15 – 50 – 001: Pothole Patching - hot mix

15 – 50 – 002: Pothole Patching - cold mix

This activity involves the repair of potholes, which have developed on the surface of paved roads where there is no evidence of base failure. Potholes shall be defined as local failures usually round or oval in shape covering less than 4.0 sq. m and less than 100mm in depth. Repair of larger areas shall be defined as surface repairs.
The areas to be repaired shall be marked out into rectangular shapes. All failed areas shall be cut back to sound road material. The hole shall extend to the bottom of the base layer, and the sides shall be cut to form a vertical face. All

unsuitable material shall be removed and deposited away from the road to the approval of the Engineer.
A prime coat of 60% cationic spray grade emulsion, shall be applied on all the sides and on the bottom of the prepared hole
Premixed bituminous material, similar to the existing surfacing shall be placed in the hole and compacted in two or more layers of regular thickness depending on the depth involved.
The final layer, prior to compaction, shall be overfilled by 20% of its depth. Compaction shall be carried out using a pedestrian vibrating roller, plate compactor or hand rammer as appropriate until the surface is level, with the surrounding material.
A minimum depth of 50mm shall be provided for the cationic premix bituminous backfill.
Premix proportions shall be as follows:

-	Sand	38%
-	6.7mm aggregate	57%
-	Bitumen emulsion	5% (bitumen content 60-65%)

Work Method

The Contractor shall use **Labour** and **Equipment** to carry out this item.
Quality Control

- The quality of the repair material shall be to the approval of the Engineer.
- The patch shall be checked using a straight edge and shall be flush with other parts of the carriageway
- Compaction of the patch shall be checked such that no imprint of the compaction equipment is visible.

Measurement Unit: m^3
The unit of measurement shall be the volume of material used in the repair.
Payment
The unit rate for this item shall include the full compensation, labour, tools, materials , equipment and incidental costs required to carry out the work.

15 – 50 – 004: Road Edge Repairs

This activity involves the repair to the edges of paved carriageways, including the rebuilding of pavement layers and the shoulders.
All soft material along the surface edge shall first be removed. The pavement layers shall be rebuilt and thoroughly compacted, in similar materials to the existing pavement. The pavement shall be similarly rebuilt against sound material of the existing pavement, and thoroughly compacted. The top of the compacted fill shall be between 30mm to 50mm below the estimated new surface level.
A trench (100 mm wide x 100mm deep) shall be dug along the surface edge in order to reinforce the new edge. The trench shall be swept clean of all loose material and primed with bitumen emulsion.
A trench shall be filled with cold premix and compacted in layers of a 50mm maximum thickness, finishing flush with the existing surface and maintaining the cross fall. The repaired edge shall be finished off by sheet patching with a light sand layer to absorb surplus bitumen.
Work Method
The Contractor shall use **Labour** and **Equipment** to carry out this item.
Quality Control

- The edge repair shall be checked using straight edge to be flush with other parts of the carriageway
- Compaction of the edge repair shall be such that no imprint of the compaction equipment is visible.

Measurement Unit: m^2
The measurement shall be the area of the repair including the bituminous edge and shoulder.
Payment
The unit rate shall be full compensation for labour, tools, materials, equipment, and incidental costs required to carry out the work.

15 – 60 – 001 Spot Sealing - (Fine cracks)

This activity involves the repair of alligator cracking (maximum width 3mm) on the carriageway. The area to be sealed shall be marked in chalk and be clean and dry. The bituminous binder shall be as specified by the Engineer

and shall be applied with a spray lance or other approved method. Distribution rates shall be 1.5kg/m^2 for bitumen emulsion.
Coarse sand, up to 5mm, shall then be spread over the whole surface.
Crack sealing shall be carried out during the warm and dry weather.
Work Method
The Contractor shall use **Labour** and **Equipment** to carry out this item.
Quality Control

- The quality of the repair work shall be to the approval of the Engineer.
- The area of spot sealing shall be checked to be free of cracks.

Measurement Unit: m^2
The measurement for this item will be the area of fine cracks repaired.
Payment
The unit rate shall include full compensation for materials, labour, tools, equipment, and incidental costs required to carry out the work.

15-60-002 Crack Sealing

This activity covers the repair of transverse or longitudinal cracks wider than 3mm on the surface of a surface dressed or bituminous carriageway or shoulder.
The cracks and the surrounding road surface shall be clean and dry. The cracks shall be filled with hot cut back bitumen.
The bitumen shall be distributed using a watering can and shall follow the line of the crack, with the nozzle or spout held close to the road surface, keeping the width of the spread as narrow as possible. Coarse sand, up to 5mm, or crusher dust shall be spread over the strip of the binder.
All crack sealing shall be carried out during the warm and dry weather.
Work Method
The Contractor shall use **Labour** and **Equipment** to carry out this item.
Quality Control

- The sealing shall be carried out to the satisfaction of the Engineer.
- The area of sealing shall be checked to be free of cracks.

Measurement Unit: m

The measurement shall be the length of cracks sealed.
Payment

The unit rate shall include full compensation for materials, labour, tools and incidental costs required to carry out the work.

15 – 80 – 001 to 005 Base repairs

This activity involves the repair of localised failures of the pavement layers, including the removal of the deformed areas and reconstructing the pavement and surfacing layers including treatment of the bottom of the excavation prior to backfilling.
The areas to be repaired shall be marked and cut out into rectangular shapes. All failed area shall be cut back to sound road material. The sides shall be dressed so that they are at 60º to the horizontal, and the bottom of the hole shall be compacted to a density of 93 % AASHTO T180. All unsuitable material shall be removed and deposited away from the road as directed by the Engineer.
For a bituminous base a prime coat of 60% cationic spray grade emulsion shall be applied to all vertical surfaces and on the bottom of the prepared hole.
The material for the base repair shall be graded crushed stone, dense bitumen macadam or neat gravel, according to the original base material, and shall be compacted in layers as directed by the Engineer.

15-80-001: Graded Crushed Stone

"Graded crushed stone" shall be crushed stone with a smooth grading curve, which is within the specified envelope. The stone class shall be given in the special Specifications or as directed by the Engineer.
Work Method
The Contractor shall use **Labour** and **Equipment** to carry out this item of work.
Quality Control

- The repair shall be carried out to the approval of the Engineer.
- The repair shall be checked with a straight edge and shall be flush with other parts of the carriageway laterally and longitudinally.
- Compaction of the patch shall be checked such that no imprint of the compaction equipment is visible.

Measurement Unit m^3
The measurement shall be the volume of graded crushed stone compacted in the repair measured in-site.
Payment
The unit rate for this item shall include the full compensation for the materials, tools, labour, equipment and incidental costs, required to carry out the work.

15-80-002: Dense Bitumen Macadam
Dense bitumen macadam shall be a hot-mixed, hot-laid plant mixture of well-graded aggregate and penetration grade bitumen, as specified for road-base material.

Work method
The Contractor shall use **Labour** and **Equipment** to carry out this item.
Quality Control
- The repair shall be carried out to the approval of the Engineer
- The repair shall be checked with a straight edge and shall be flush with other parts of the carriageway laterally and longitudinally.
- Compaction of the patch shall be checked such that no imprint of the compaction equipment is visible.

Measurement Unit: m^3
The measurement shall be the volume of dense bitumen macadam compacted on the road measured in- situ.
Payment
The unit rate for this item shall include the full compensation for the materials, tools, labour, equipment, and incidental costs required to carry out the work.
15-80-005: Neat Gravel

"Gravel " includes lateritic gravel, quartzitic gravel, calcareous gravel, soft stone, coral rag, clayey sands, decomposed rock, crushed rock or a combination of any of these materials.
Work method
The Contractor shall use **Labour** and **Equipment** to carry out this item of work
Quality Control
- The repair shall be carried out to the approval of the Engineer.
- The repair shall be checked with a straight edge and shall be flush with other parts of the carriageway laterally and longitudinally.
- Compaction of the patch shall be checked such that no imprint of the compaction equipment shall be visible.

Measurement Unit: m^3

The measurement shall be the volume of gravel compacted on the road measured in-situ.
Payment
The unit rate for this item shall include the full compensation for the materials, labour, tools, equipment, and incidental costs required to carry out the work.
SECTION 17: BRIDGE MAINTENANCE

17 - 50 - 001: Cleaning and Clearing - Deck

17 - 50 - 002: Cleaning and Clearing - Riverbed

Description

This activity involves the following tasks,

- Blooming of the deck and sidewalks to clear all loose soil, dirt, aggregate, debris, and removal of the same from site
- Removal of all dirt and stones lodged between deck planking
- Clearance of weep holes of dirt and debris
- Removal of all dirt and debris in joints between beams and abutments or any point under bridge
- Removal of debris lodged at pier and abutments or any point under the bridge
- Removal of trees and bushes growing under the bridge and directly upstream and downstream and disposing the material away from the bridge and stream
- Cleaning of any signs or reflectors on or at the bridge.
- Removal of termites tunnels in the vicinity of timber bridges and soaking the ground with chemical solutions against wood destroying insects.

Work Method

The Contractor shall use **Labour** to carry out this item.

Quality Control

- The bridge deck shall be checked to be clean and free of dirt and debris
- The passage below the deck shall be checked to be free of obstructions

Measurement Unit: Provisional Sum
The measurement of work shall be on a Dayworks basis.
Payment
Payment shall be made for the labour and material instructed by the Engineer to be used on the work.

SECTION 20: ROAD FURNITURE REPAIR AND MAINTENANCE

20-50- 001: Traffic Sign Maintenance

This activity involves all the tasks required to ensure that the road signs and signposts are in a clean, properly aligned, vertical and secure condition; the replacement of missing or broken bolts, nuts or other fixings and the tightening of the same. The maintenance shall also extend to securing any loose posts by the re-compacting or removal of any unsuitable material surrounding the posts, importing and compacting of suitable material to render the post secure.

Work Method

The Contractor shall use **Labour** to carry out this item.

Quality Control

- The signs shall be clean and in vertical position
- The fixings shall be hand checked to be tight

Measurement Unit: No.
The measurement shall be number of signs maintained.

Payment
The unit rate shall be the full compensation for labour, tools, material and incidental costs required to carry out the work.

20-50- 003: Guardrail Repair

This activity involves the repair of Guardrails (including rails, posts and fixings) to a properly aligned, vertical and secure condition. The repair shall include securing any loose posts by re-compaction or removal of any unsuitable material surrounding the post, importing and compaction of suitable materials to render the posts secure, and the re-fixing of the rails.

Work Method

The Contractor shall use **Labour** to carry out this item.

Quality Control

- The guardrails shall be checked as being properly aligned secure and in a vertical position
- The fixings shall be hand checked to be firmly fixed

Measurement Unit: m
The measurement shall be the length of Guardrail repaired
Payment
The unit rate shall be the full compensation for labour, material, tools, and incidental costs required to carry out the work.

20- 50- 004: Marker Posts Replacement

This activity involves the replacement of kilometre stones and culvert marker posts
The Engineer shall determine the location of the marker stones and posts. They shall be set in a simple excavation and backfilled with soil. The depth of the excavation shall be determined on the site, depending on the size and shape of the marker stone or post.

Work Method

The Contractor shall use **Labour** to carry out this item.

Quality Control

- The posts shall be vertical and firmly bedded to the approval of the Engineer

Measurement Unit: No
The measurement shall be in number of marker posts.
Payment
The unit rate shall be the full compensation for labour, tools, posts, materials and incidental costs required to carry out the work.

20-50-006: Sign cleaning and repainting

This activity involves the cleaning of road signs, reflectors and guideposts and repainting of sign supporting structures, rear panels of signs, kilometre posts and culvert markers. Surfaces to be painted shall be clean, dry and free from loose material.

Work Method

The Contractor shall use **Labour** to carry out this item of work

Quality Control

- The cleaning and painting shall be carried out to the approval of the Engineer

Measurement Unit: No
The measurement shall be in number of signs, reflectors, or guideposts cleaned or painted.
Payment
The unit rate shall be the full compensation for labour, materials, tools and incidental costs required to carry out the work.

SECTION 25: HIV/AIDS AWARENESS AND PREVENTION CAMPAIGN

Scope:

This section covers the Contractors obligations with regard to on-site HIV / AIDS awareness campaign and preventive measures that are to be instituted.

25-50-001 HIV / AIDS Awareness Campaign

The Contractor shall institute an HIV / AIDS awareness campaign amongst the workers for the duration of the

Contract.
As part of the campaign the Contractor shall display AIDS awareness posters in all buildings frequented by workers employed on the Contract, where such buildings fall under the control of the Contractor.

In addition at least two of the Contractors vehicles regularly used on site shall display HIV / AIDS awareness posters. The posters shall be printed on gloss paper and shall be at least A1 size on buildings and A3 size or other approved size on vehicles. The message on the posters shall be supplied by the Employer through the Engineer. Aids awareness shall also be included in the orientation process of all workers employed on the Contract.
Measurement Unit: month
The measurement shall be the calendar month or part thereof, measured over the duration of the campaign.
Payment
The unit rate shall include full compensation for labour and material required for the provision of the item.

25-50-002 AIDS Prevention Campaign

The Contractor shall institute an HIV / AIDS prevention campaign amongst the workers for the duration of the Contract.

As part of the campaign the Contractor shall make condoms available to the workers. The condoms shall be supplied by the Employer through the Engineer.
Measurement Unit: month
The measurement shall be the calendar month measured over the duration of the campaign.
Payment
The unit rate shall include full compensation for labour and material including the distribution of condoms, required for the provision of the item.

76 DRAWINGS

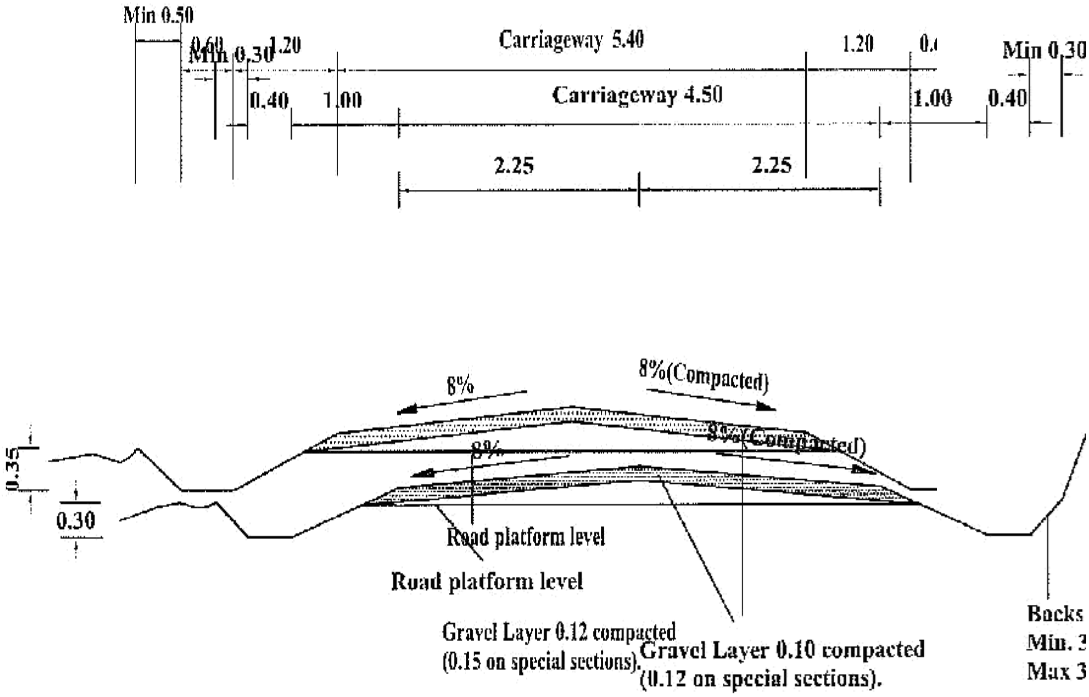

Notes:

1.All dimensions in metres

2.Traffic levels of 5-200 vpd may justify a carriageway width of 6.0m

3.Gravel thickness may be increased as directed by the Engineer

Notes:

1.All dimensions in metres

2.Gravel thickness may be increased as directed by the Engineer

C-2

C-1

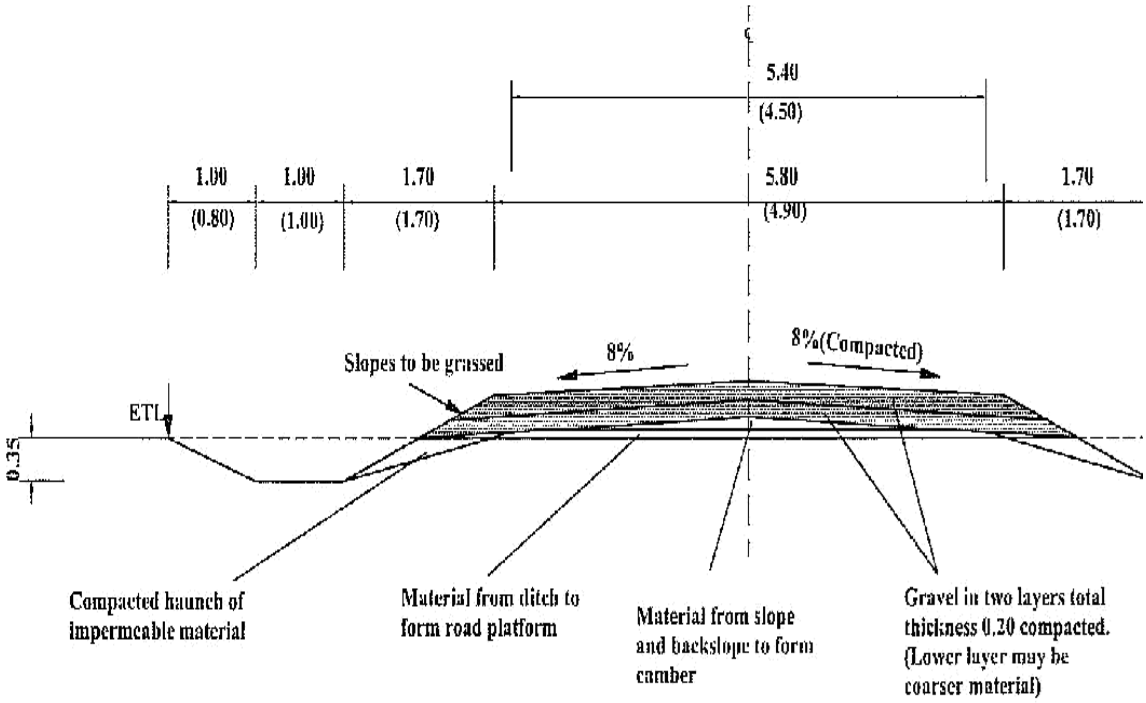
5.40
(4.50)
1.00
(0.80)
1.00
(1.00)
1.70
(1.70)
5.80
(4.90)
1.70
(1.70)
8%
8%(Compacted)
Slopes to be grassed
ETL
0.35
Compacted haunch of impermeable material
Material from ditch to form road platform
Material from slope and backslope to form camber
Gravel in two layers total thickness 0.20 compacted. (Lower layer may be coarser material)

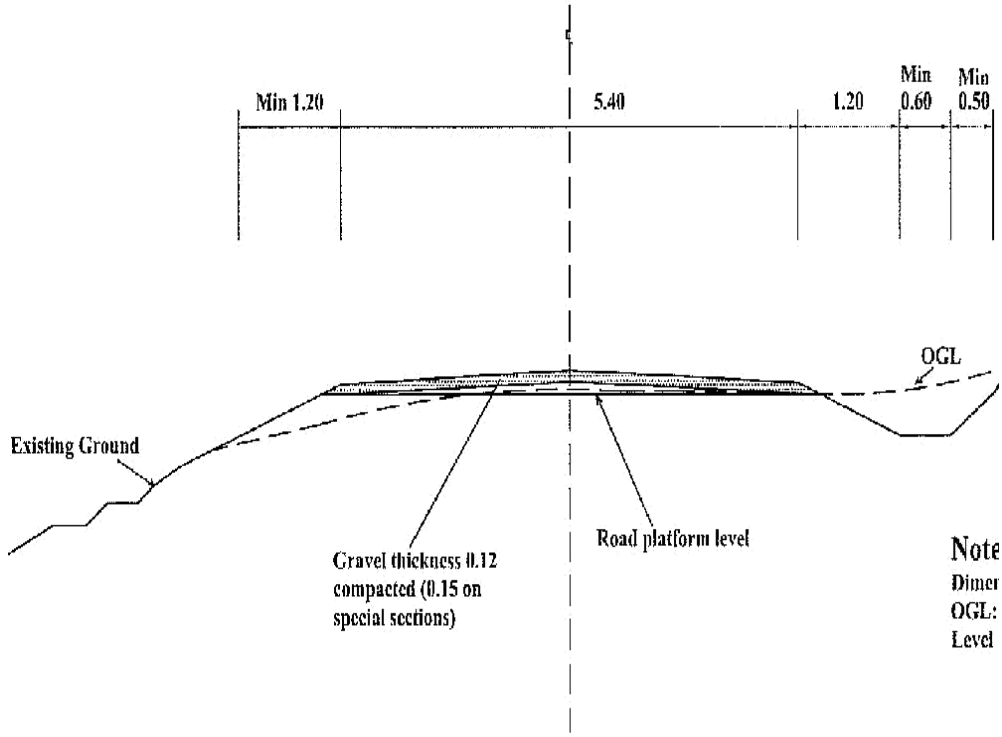
Min 1.20
5.40
1.20
Min 0.60
Min 0.50
OGL
Existing Ground
Gravel thickness 0.12 compacted (0.15 on special sections)
Road platform level
Note
Dimer
OGL:
Level

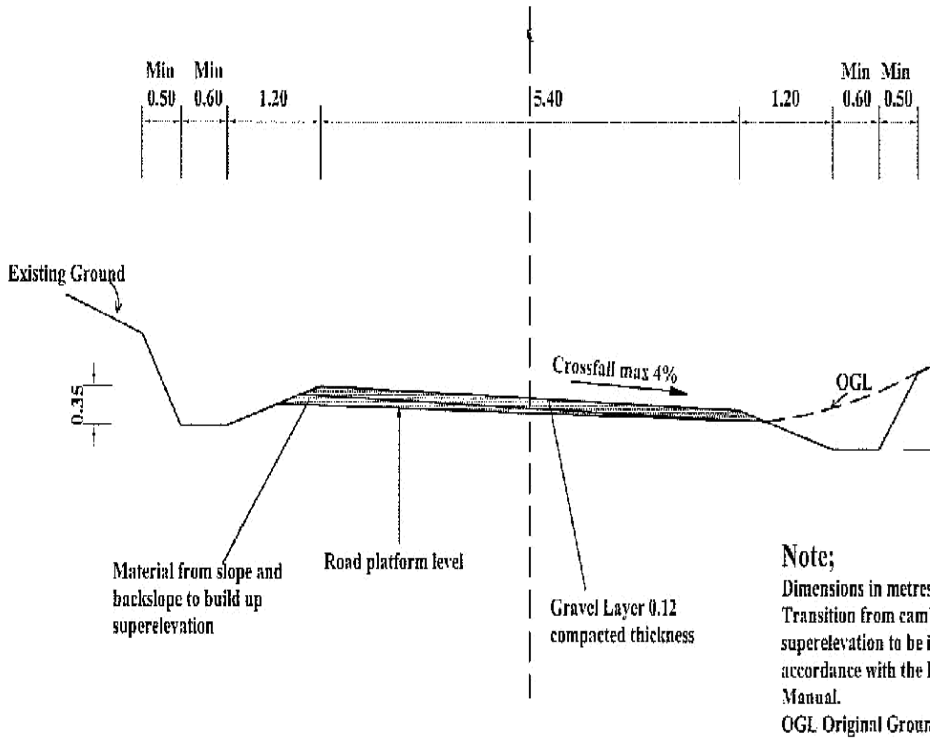
Min
0.50
Min
0.60
1.20
5.40
1.20
Min
0.60
Min
0.50
Existing Ground
0.35
Crossfall max 4%
OGL
Material from slope and backslope to build up superelevation
Road platform level
Gravel Layer 0.12 compacted thickness
Note;
Dimensions in metre
Transition from cam
superelevation to be i
accordance with the
Manual.
OGL Original Grou

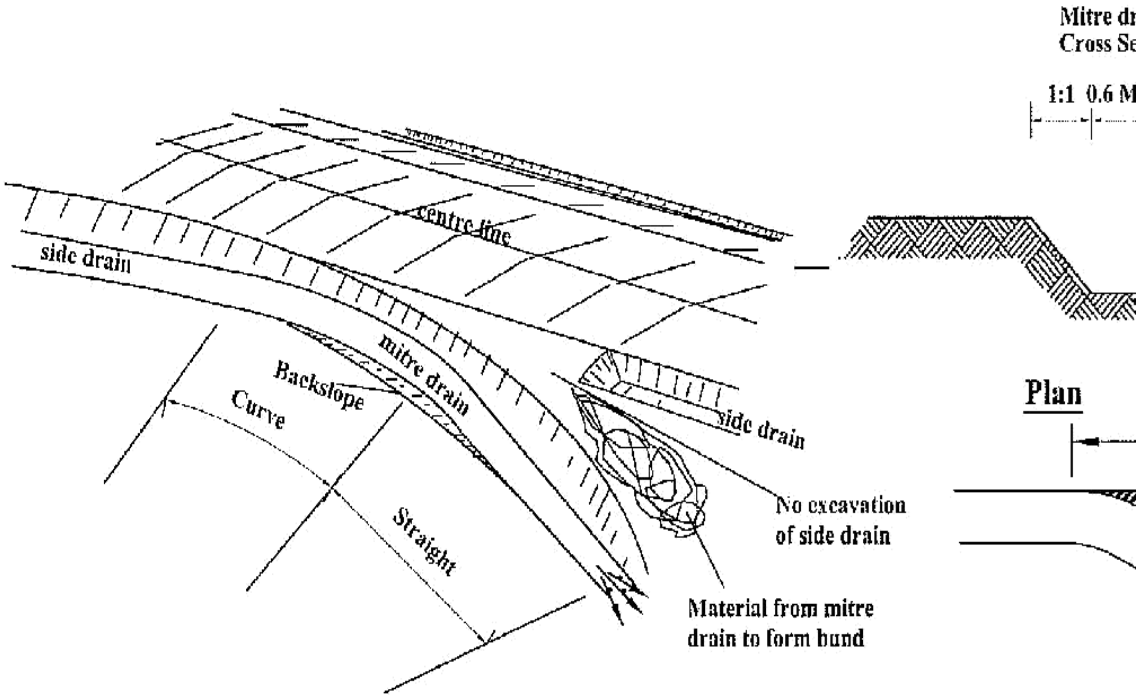

Notes

Location,direction and length of th
by the Engineer

C-6

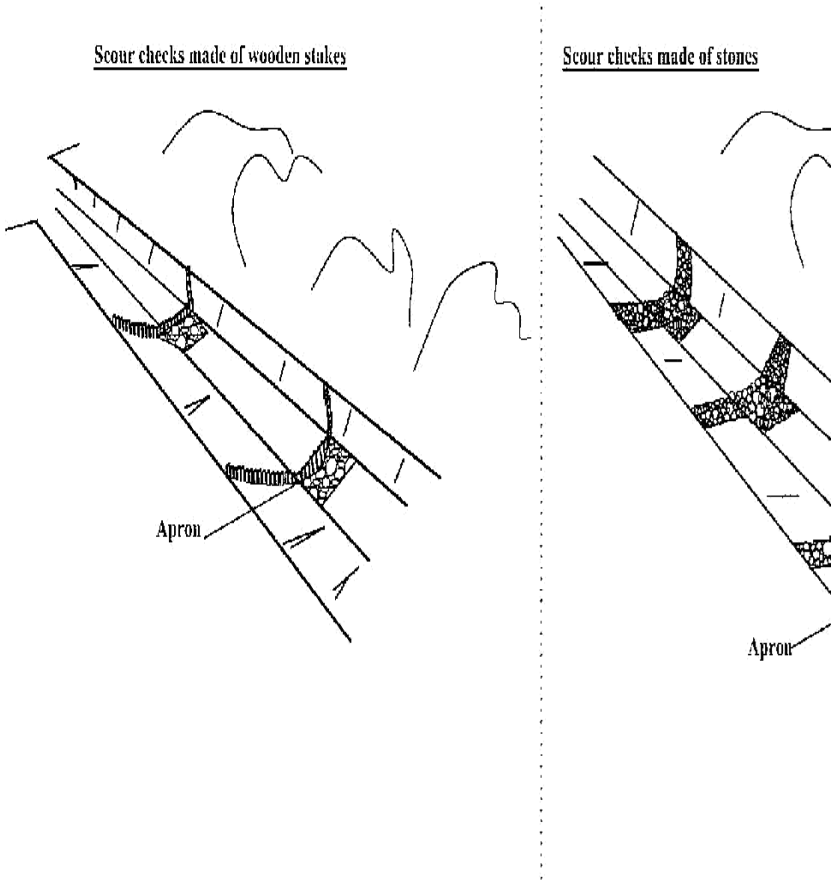
Scour checks made of wooden stakes
Apron
Scour checks made of stones
Apron

Scour checks made of stones

Cross section

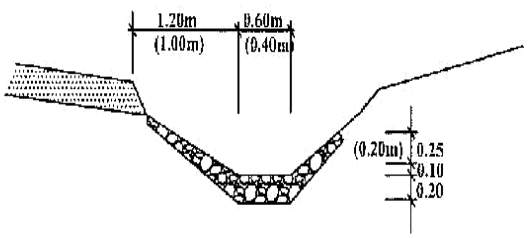

Ground plan

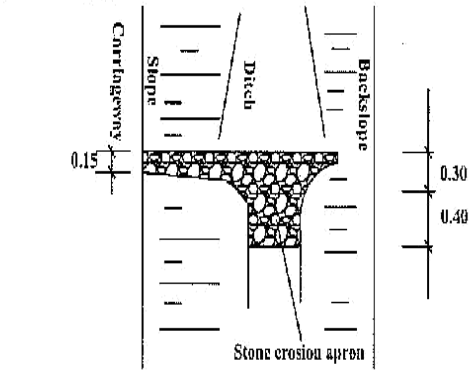

NOTE
1.Dimensions in metres

Scour checks mac

Cross section

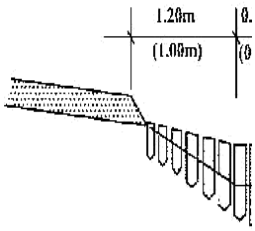

Ground plan

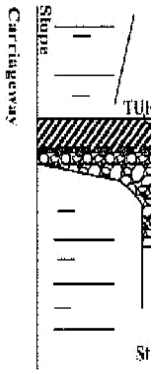

STONE WEIGHT:MIN 10KG
STAKE DIAMETER: MIN. 0.1(

C-8

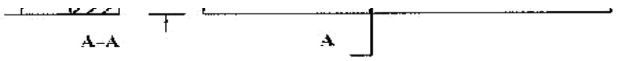

Note
1.Dimensions in mm

SECTION OF MASONRY SCOUR CHECK

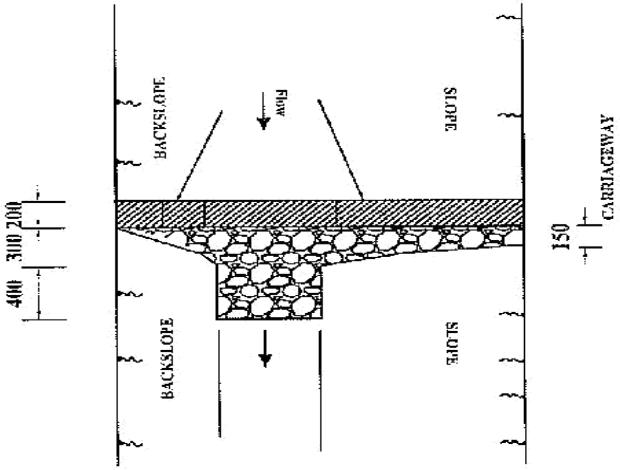

PLAN OF DRAIN WITH SCOUR CHECK

Cross-Section	Sizes in mm			Excav (m3)	Concrete (m3)	Apron stone pitching (m3)
	Length	Width	Depth			
A	2400	200	550	0.22	0.25	0.18
B	2000	200	500	0.18	0.2	0.14

Issued by Kenya Rural Roads Authority

SECTION OF CONCRETE SCOUR CHECK

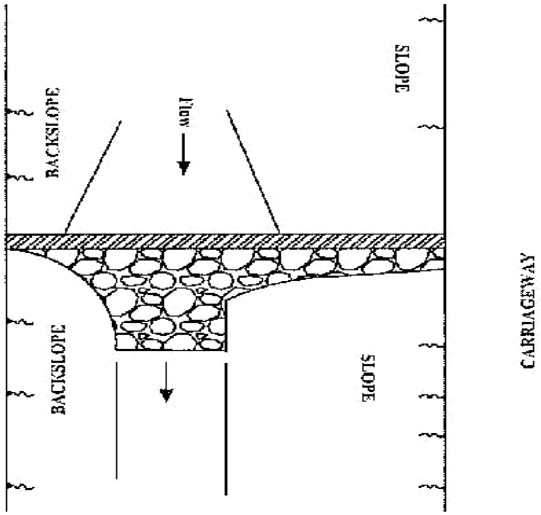

NOTE
1.Dimensions in mm

PLAN OF DRAIN WITH SCOUR CHECK

Cross-Section	Sizes in mm			Excav (m3)	Concrete (m3)	Apron stone pitching (m3)
	Length	Width	Depth			
A	2400	100	550	0.13	0.15	0.18
B	2000	100	500	0.10	0.09	0.14

Issued by Kenya Rural Roads Authority

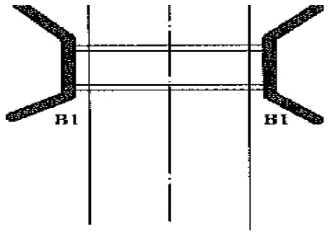

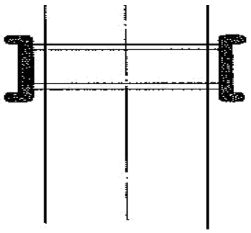

TYPE 2(ENTRY ONLY)

TYPE 4(ENTRY AND EXIT ON ACCESS)

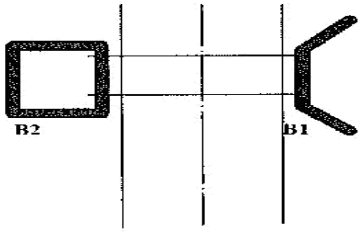

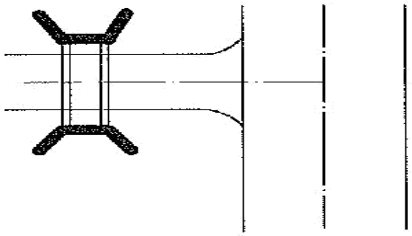

NOTE

1. The code numbers specify the shape and function and the code letter denotes the material;

A =Concrete block
B =Stone masonry
C =Concrete

Issued by Kenya Rural Roads Authority

SECTION A-A

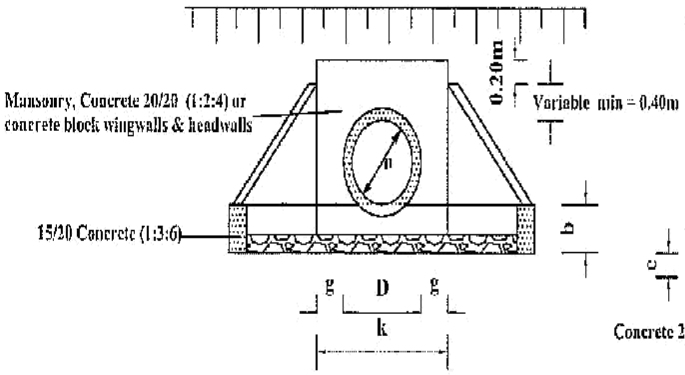

SECTION B-B

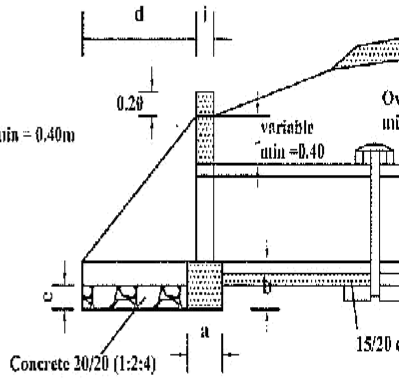

PLAN

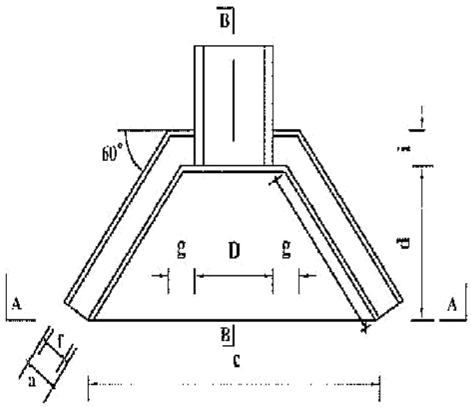

CULVERT TYPES	
X-SECTION WIDTH m	No. of pipes
4.50	6
5.50	7
6.50	8

PIPE DIAMETER IN M		TYPE A and C CONCRETE BL	
		450	600
DIMENSION	UNIT		
a FOUNDATION	m	0.30	0.30
b FOUNDATION	m	0.30	0.30
c FOUNDATION	m	2.20	2.35
d APRON	m	1.00	1.00
e APRON	m	0.20	0.20
f WALL	m	0.20	0.20
g WALL	m	0.30	0.30
h WALL	m	1.15	1.15
i WALL	m	0.20	0.20
k APRON	m	1.05	1.20
MATERIAL REQUIREMENT			
FOUNDATION (concrete)	m3	0.30	0.32
HEAD/WINGWALLS (Conrete/Masonry)	m3	0.42	0.49
APRON (concrete)	m3	0.33	0.36

C-11

SECTION A-A

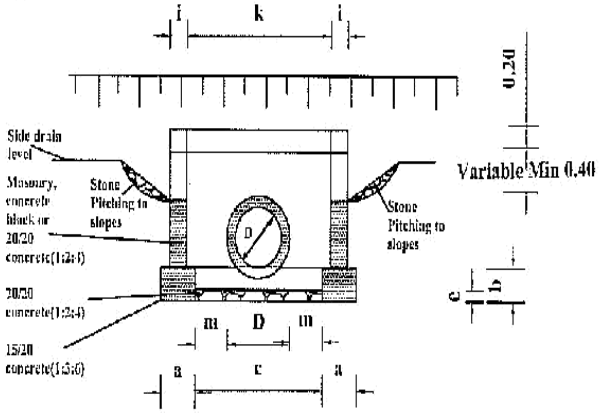

SECTION B-B

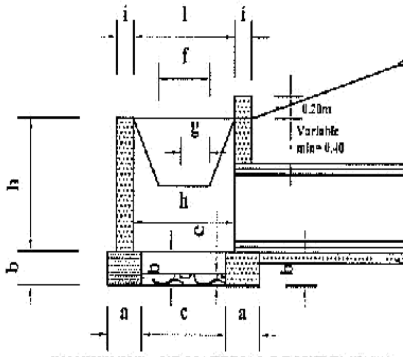

PLAN

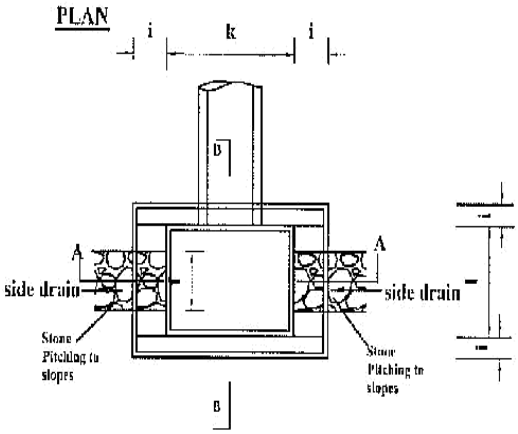

DIMENSIONS AND MATERIAL REQUIREMENTS

PIPE DIAMETER IN (M)		TYPE A CONCRETE BLOCKS			TY M
		450	600	900	45
DIMENSION	UNIT				
a FOUNDATION	m	0.30	0.30	0.30	0.4
b FOUNDATION	m	0.30	0.30	0.30	0.3
c FOUNDATION	m	1.10	1.10	1.40	1.2
d APRON	m	0.90	0.90	0.90	1.0
e APRON	m	0.20	0.20	0.20	0.2
f DROP INLET	m	0.60	0.60	0.60	0.6
g DROP INLET	m	0.30	0.40	0.60	0.3
h DROP INLET	m	0.60	0.80	1.20	0.6
i DROP INLET	m	0.20	0.20	0.20	0.4
k DROP INLET	m	1.20	1.20	1.50	1.2
l DROP INLET	m	1.00	1.00	1.00	1.0
m DROP INLET	m	0.38	0.30	0.30	0.3
MATERIAL REQUIREMENT					
FOUNDATION (concrete)	m3	0.47	0.47	0.52	0.7
HEAD/WINGWALLS (Concrete/Masonry)	m3	0.56	0.72	1.15	1.2
APRON (cocrete)	m3	0.24	0.24	0.30	0.2

C-12

C-13

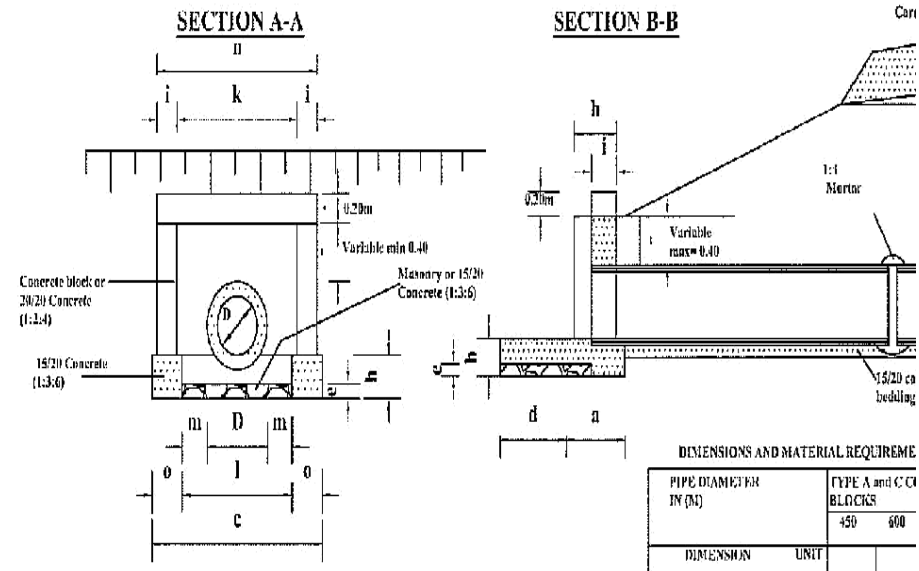

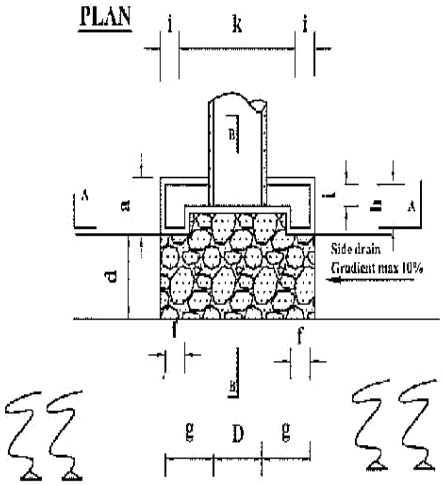

DIMENSIONS AND MATERIAL REQUIREME

PIPE DIAMETER IN (M)			TYPE A and C CO BLOCKS	
			450	600
	DIMENSION	UNIT		
a	FOUNDATION	m	0.50	0.50
b	FOUNDATION	m	0.30	0.30
c	FOUNDATION	m	1.55	1.70
d	APRON	m	0.60	0.60
e	APRON	m	0.20	0.20
f	HEADWALL	m	0.20	0.20
g	HEADWALL	m	0.50	0.50
h	HEADWALL	m	0.50	0.50
i	HEADWALL	m	0.50	0.50
k	HEADWALL	m	0.50	0.50
l	FOUNDATION	m	0.50	0.50
m	FOUNDATION	m	0.50	0.50
n	HEADWALL	m	0.50	0.50
o	FOUNDATION	m	0.50	0.50
MATERIAL REQUIREMENT				
	FOUNDATION (concrete)		0.23	0.19
	HEADWINGWALLS (Concrete/Masonry)		0.34	0.37
	APRON (concrete)		0.95	0.99

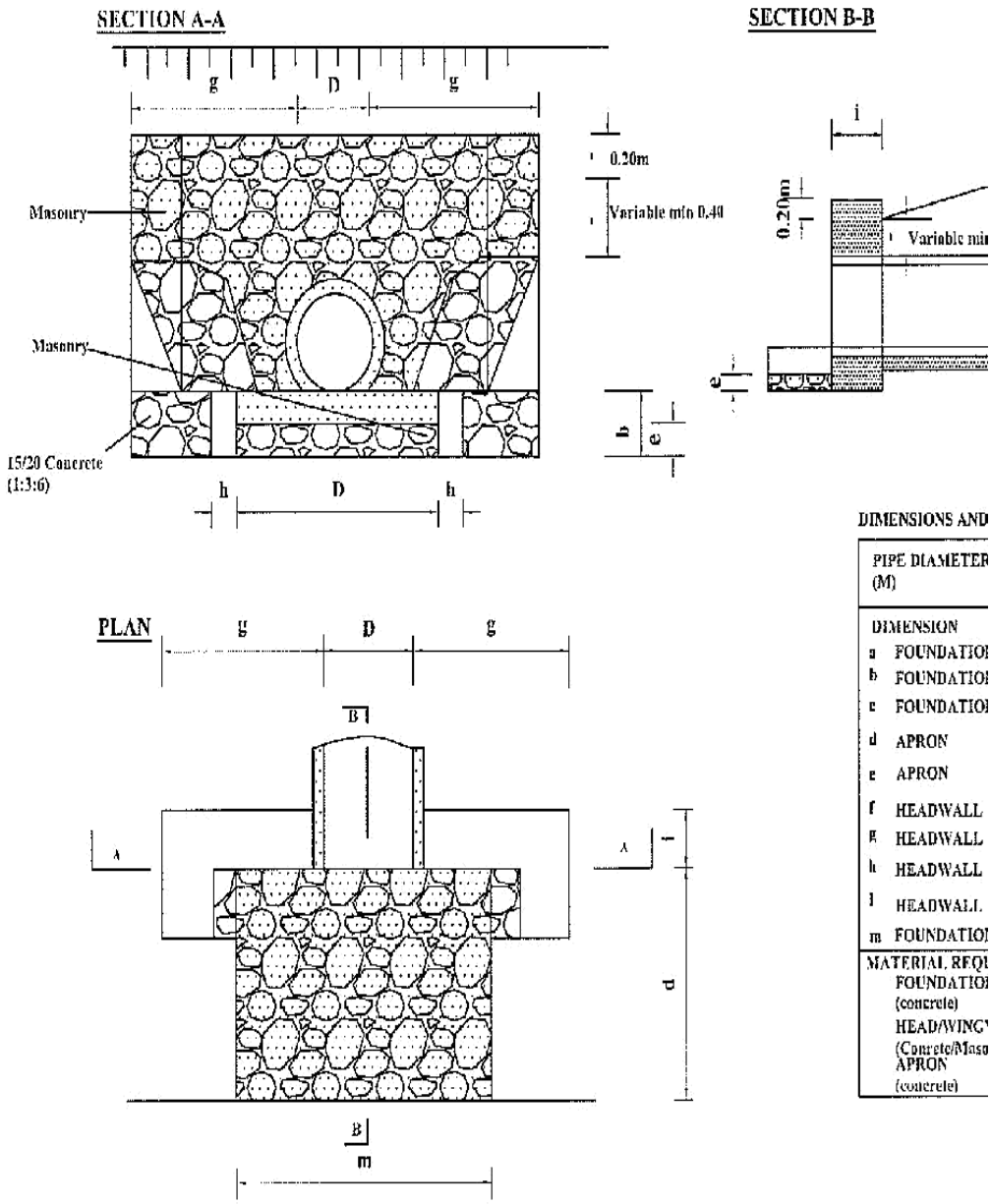
SECTION A-A
SECTION B-B
g
D
g
0.20m
Variable m/o 0.40
Masonry
Masonry
15/20 Concrete
(1:3:6)
h
D
h
i
0.20m
Variable mi
e
b
e
DIMENSIONS AND
PIPE DIAMETER
(M)
DIMENSION
a FOUNDATIO
b FOUNDATIO
c FOUNDATIO
d APRON
e APRON
f HEADWALL
g HEADWALL
h HEADWALL
i HEADWALL
m FOUNDATIO
MATERIAL REQ
FOUNDATIO
(concrete)
HEAD/WING
(Concrete/Maso
APRON
(concrete)
PLAN
g
D
g
B
A
A
i
d
B
m

C-14

SECTION A-A

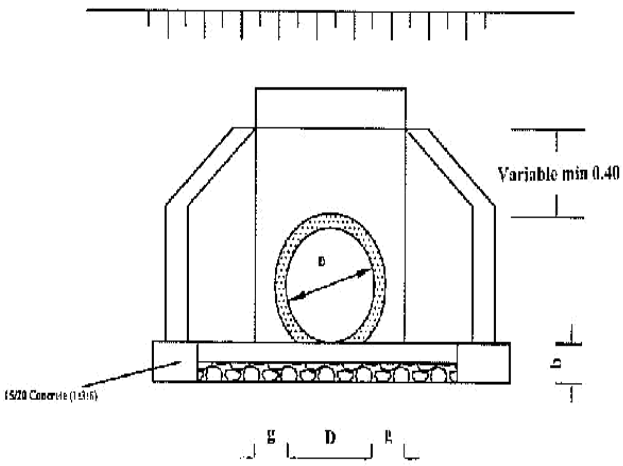

PLAN

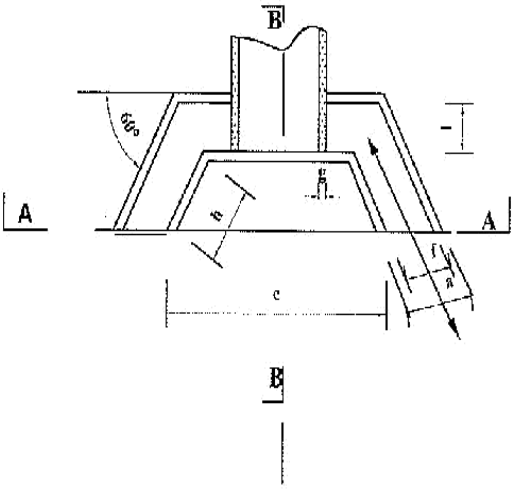

SECTION B-B

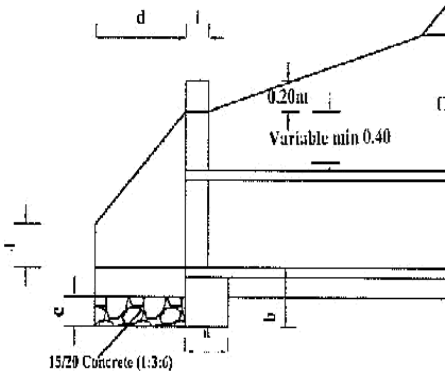

DIMENSIONS AND MATERIAL REQUIREMENTS

PIPE DIAMETER IN (M)			TYPE A (CONCRETE BLOCKS) 450	600	900
	DIMENSION	UNIT			
a	FOUNDATION	m	0.30	0.30	
b	FOUNDATION	m	0.30	0.30	
c	APRON	m	1.34	1.49	
d	APRON	m	0.60	0.60	
e	APRON	m	0.20	0.20	
f	WINGWALLS	m	0.20	0.20	
g	WINGWALLS	m	0.10	0.10	
h	HEADWALLS	m	0.69	0.69	
j	HEADWALLS	m	0.20	0.20	
k	HEADWALLS	m	0.65	0.80	
l	HEADWALLS	m	0.40	0.40	
MATERIAL REQUIREMENT					
	FOUNDATION (concrete 1:3:6:10)		0.18	0.20	
	HEAD/WINGWALLS (Conrete/Masonry)		0.28	0.32	
	APRON (concrete)		0.12	0.14	

C-15

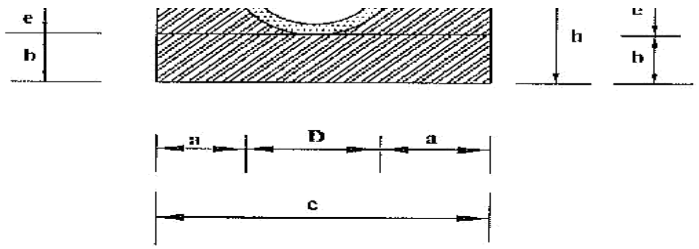

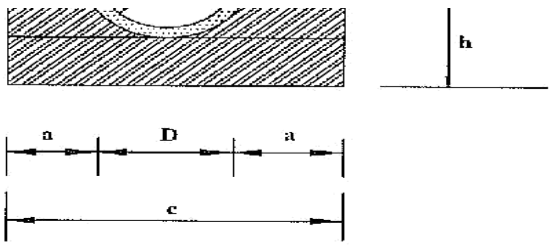

Diameter (D)	450 (mm)	600 (mm)	900 (mm)	450 (mm)	600 (mm)	900 (mm)
a	0.15	0.20	0.20	0.15	0.20	0.20
b	0.10	0.15	0.15	0.10	0.15	0.15
c	0.86	1.12	1.48	0.86	1.12	1.48
d	0.56	0.72	1.08	0.56	0.72	1.08
e	0.14	0.18	0.27	0.28	0.36	0.54
f(min)	0.34	0.45	0.68	0.34	0.45	0.68
g	-	-	-	-	-	-
h	0.24	0.33	0.42	0.38	0.51	0.69
i	-	-	-	-	-	-
Concrete	Volume in (m3/m)			Volume in (m3/m)		
Class 15/20	0.24	0.24	0.24	0.20	0.37	0.56
Application	-Fair subgrade condition -Overfill > 75% of the pipe diameter -Seasonal water flow only			-Fair to poor subgrade condition -Overfill > 75% of the pipe diameter -Seasonal water flow only		
Remarks	Material for back/overfill shall be approved by the Engineer			Material for back/overfill shall be approved by the Engineer		

Issued by Kenya Rural Roads Authority

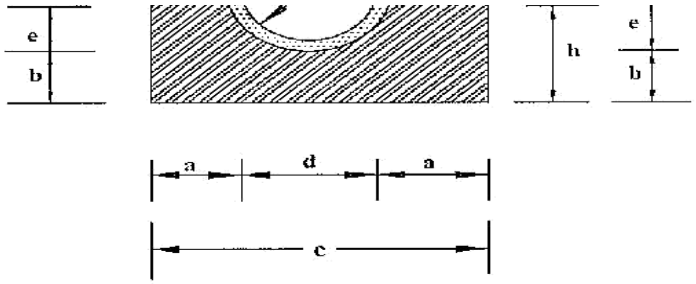

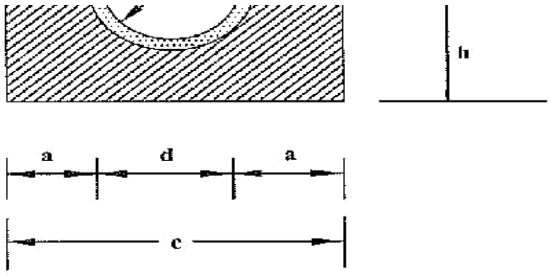

Diameter (D)	450 (mm)	600 (mm)	900 (mm)
a	0.15	0.20	0.20
b	0.10	0.15	0.15
c	0.86	1.12	1.48
d	0.56	0.72	1.08
e	0.42	0.54	0.81
f(min)	0.23	0.3	0.45
g	-	-	-
h	0.52	0.69	0.96
i	-	-	-
Concrete	Volume in (m3/m)		
Class 15/20	0.26	0.47	0.71
Application	-Fair subgrade condition -Overfill > 75% of the pipe diameter -Seasonal water flow only		
Remarks	Material for back/overfill shall be approved by the Engineer		

450 (mm)	600 (mm)	900 (mm)
0.15	0.20	0.20
0.10	0.15	0.15
0.86	1.12	1.48
0.56	0.72	1.08
0.46	0.52	0.78
0.15	0.15	0.15
0.15	0.15	0.15
0.81	1.02	1.38
0.28	0.35	0.45
Volume in (m3/m)		
0.37	0.61	0.92
-Fair to poor subgrade condition -Overfill > 75% of the pipe diameter -Seasonal water flow only		
Material for back/overfill shall be approved by the Engineer		

Issued by Kenya Rural Roads Authority

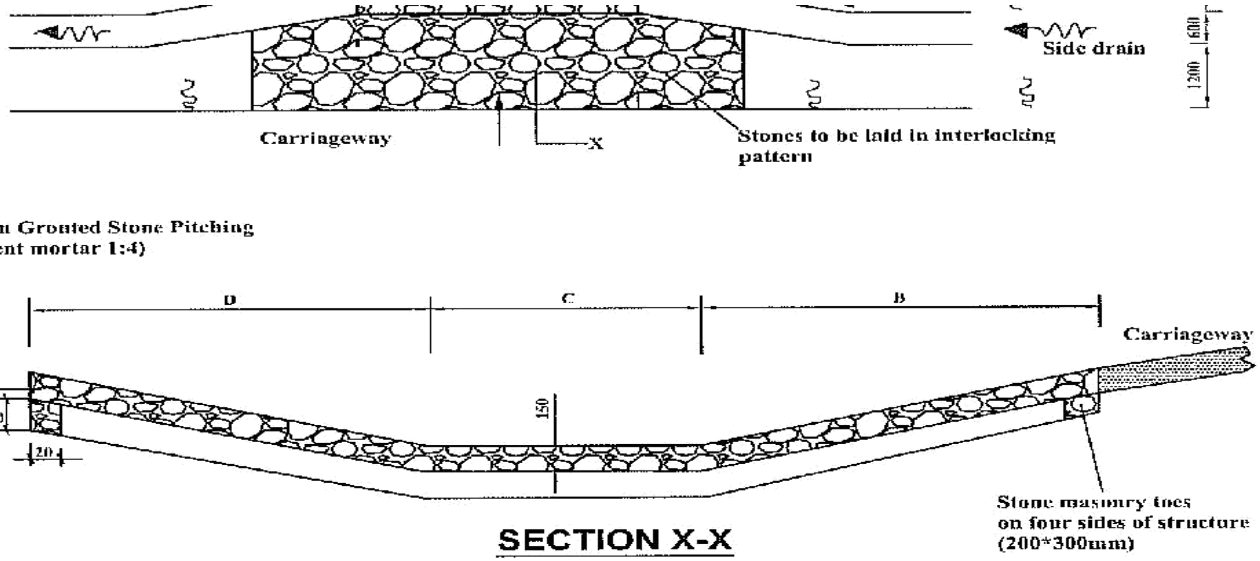

QUANTITIES TABLE								
Cross section	DIMENSONS					Excavation(m3)	Stone masonry (m3)	150mm Grouted stone pitching(m3)
	A	B	C	D	E			
A	4000	1800	600	1800	4200	7.5	1.30	21.75
	6000	1800	600	1800	4200	10.00	1.60	30.15
B	4000	1400	400	1800	3600	7.00	1.20	18.30
	6000	1400	400	1800	3600	9.00	1.50	25.50

Issued by Kenya Rural Roads Authority

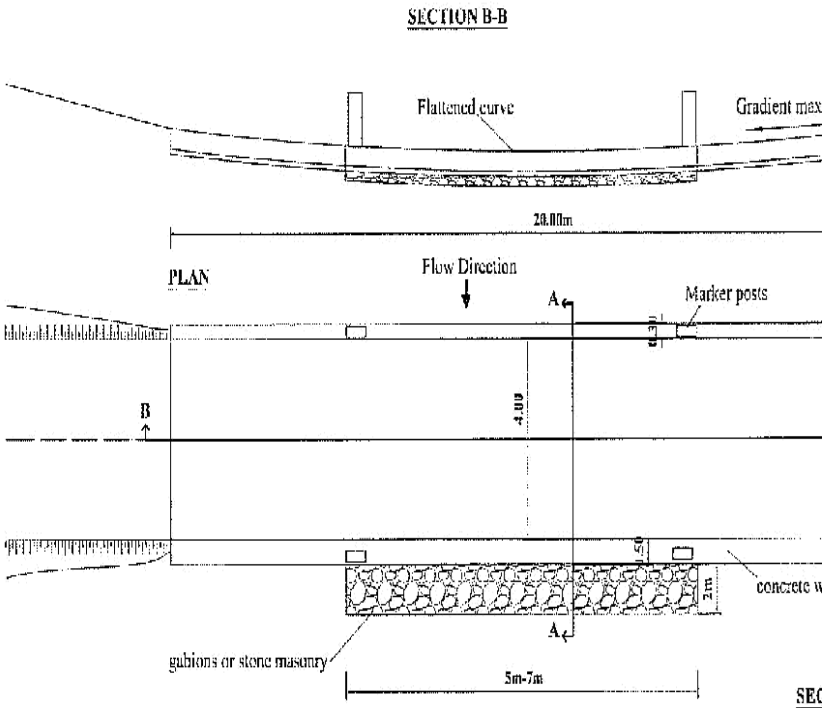

Material : All concrete Class 20/20 (1:2:4)

1 Concrete wall : 10m³
2 Concrete slab: 24m³ or stone masonry
3 Concrete toe : 8m³ or stone masonry
4 Gabions / mattress rock fill: 4.3m³ or stone masonry
5 Gabions /mattress: 36m²
6 Marker posts - precast concrete: 4 no.
7 Excavation (slab + toes + gabions) 54.2m³

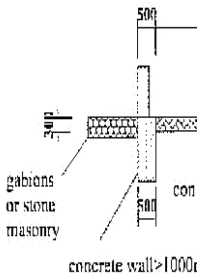

SECTION A-A

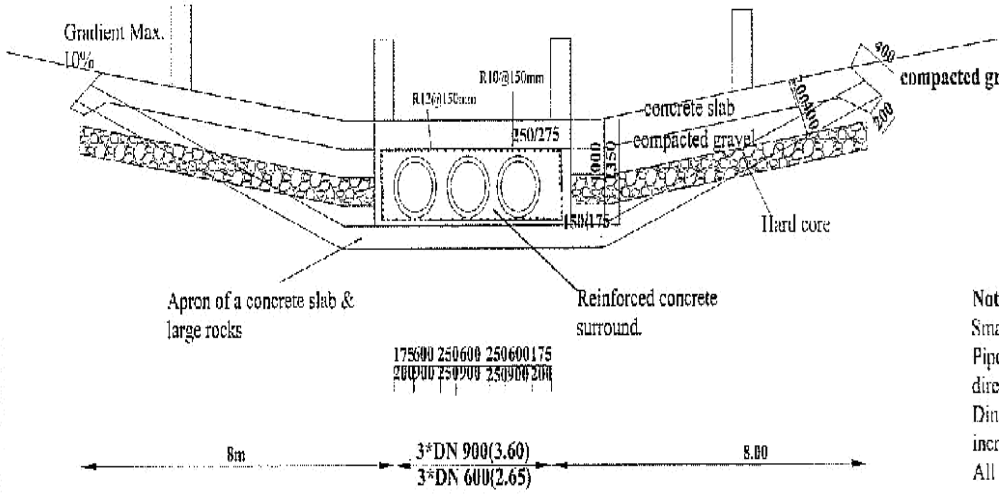

PLAN

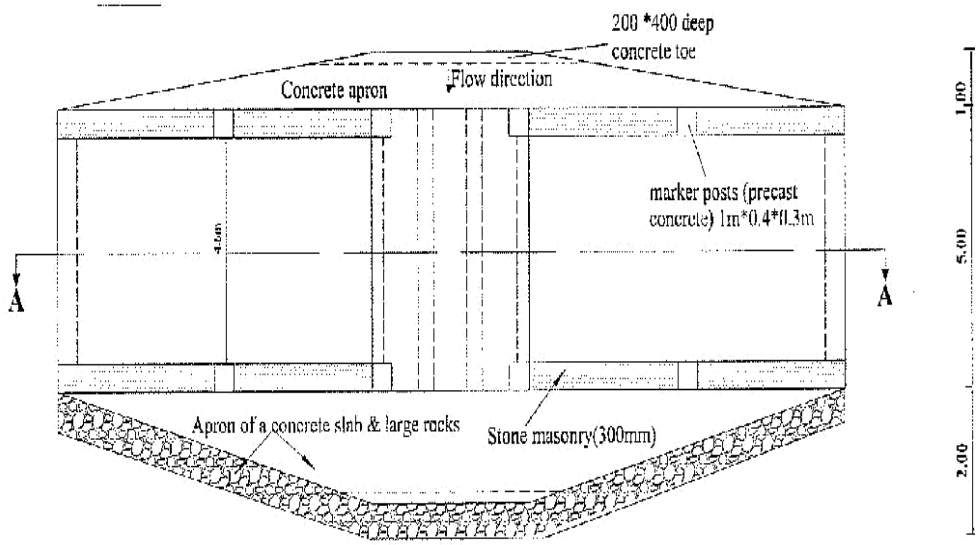

C-20

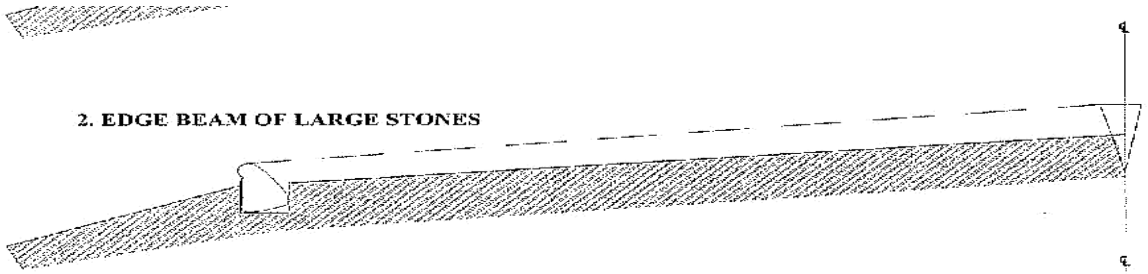

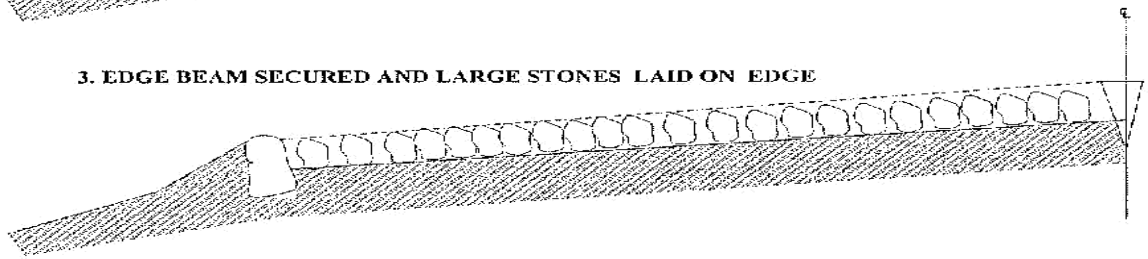

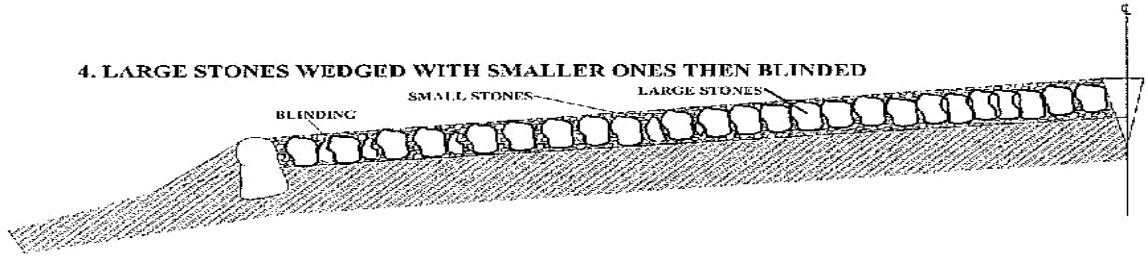

Issued by Kenya Rural Roads Authority

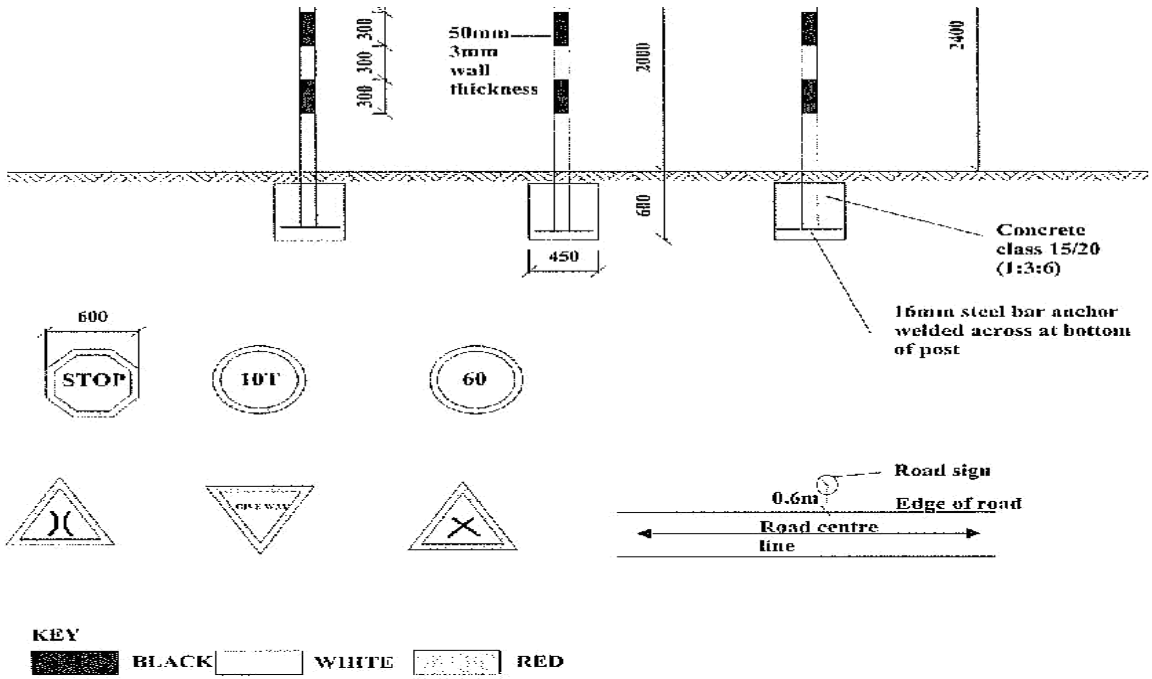

1. The type of sign required and their location shall be as shown on the Road Plan or as directed by the Engineer.
2.Sign plate to be 2mm thick mild steel plate
3.Sign post to be 50mm fixing clamps/brackets.
4.Sign plate to be fixed to steel tube by $ Nos M10 bolts and 50mm fixing clamps/brackets.
5.Sign paints shall be reflective.
6.The sign plate and post shall be treated by applying two coats of lead red oxide paint before applying a priming and two finish coats of approved paints. Paints used shall have a hard, durable and glossy finish.

Issued by Kenya Rural Roads Authority

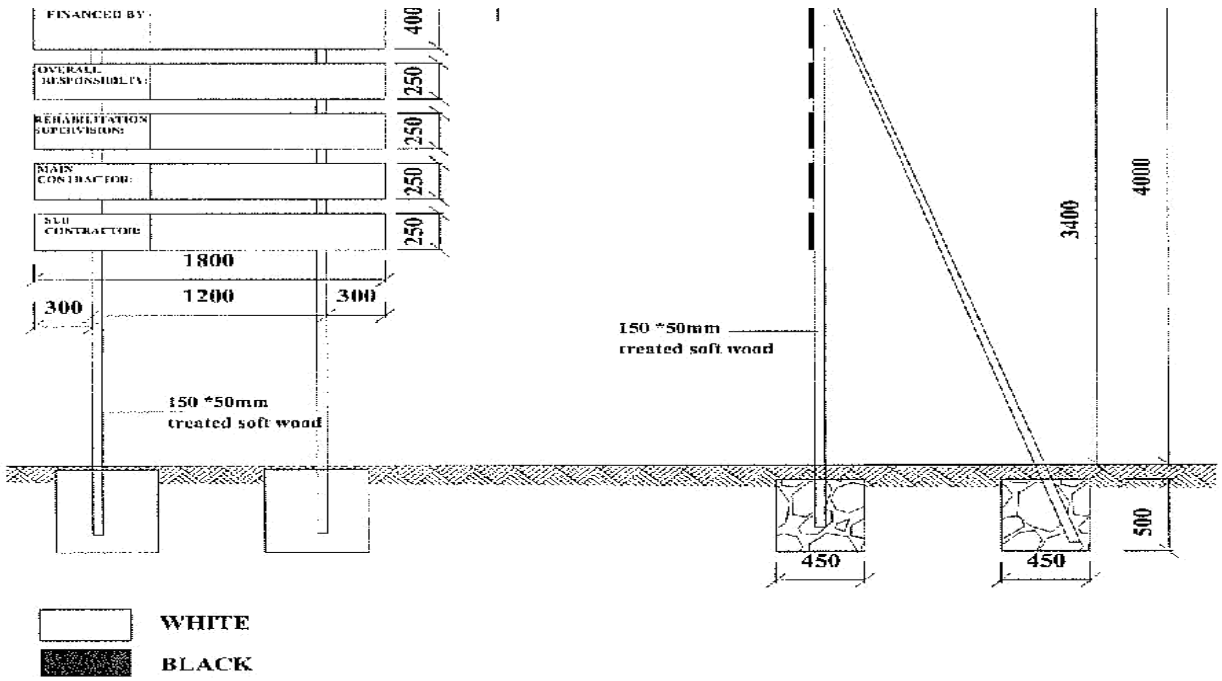

NOTES

1. The wording of the project sign board and the location to be as directed by the Engineer.
2. Materials to be used for fabrication of signboard shall be pressure impregnated treated softwood timber
3. Wording board posts to be attached to the posts with galvanised nails
4. Project board posts and struts to be embedded in concrete class 20/20(1:2:4)

Issued by Kenya Rural Roads Authority

SECTION VII- BILLS OF QUANTITIES

1. Objectives

The objectives of the Bill of Quantities are:

a) to provide sufficient information on the quantities of Works to be performed to enable tenders to be prepared efficiently and accurately; and

b) when a Contract has been entered into, to provide a priced Bill of Quantities for use in the periodic valuation of Works executed.

In order to attain these objectives, Works should be itemized in the Bill of Quantities in sufficient detail to distinguish between the different classes of Works, or between Works of the same nature carried out in different locations or in other circumstances which may give rise to different considerations of cost. Consistent with these requirements, the layout and contents of the Bill of Quantities should be as simple and brief as possible.

2. Day work Schedule

A Day work Schedule should be included only if the probability of unforeseen work, outside the items included in the Bill of Quantities, is high. To facilitate checking by the Procuring Entity of the realism of rates quoted by the Tenderers, the Day work Schedule should normally comprise the following:

a) A list of the various classes of labor, materials, and Constructional Plant for which basic day work rates or prices are to be inserted by the Tenderer, together with a statement of the conditions under which the Contractor shall be paid for work executed on a day work basis.

b) Nominal quantities for each item of day work, to be priced by each Tenderer at day work rates as Tender. The rate to be entered by the Tenderer against each basic day work item should include the Contractor's profit, overheads, supervision, and other charges.

3. Provisional Sums

A general provision for physical contingencies (quantity overruns) may be made by including a provisional sum in the Summary Bill of Quantities. Similarly, a contingency allowance for possible price increases should be provided as a provisional sum in the Summary priced Bill of Quantities. The inclusion of such provisional sums often facilitates budgetary approval by avoiding the need to request periodic supplementary approvals as the future need arises. Where such provisional sums or contingency allowances are used, the Special Conditions of Contract should state the manner in which they shall be used, and under whose authority (usually the Project Manager's).

The estimated cost of specialized work to be carried out, or of special goods to be supplied, by other contractors should be indicated in the relevant part of the Bill of Quantities as a particular provisional sum with an appropriate brief description. A separate procurement procedure is normally carried out by the Procuring Entity to select such specialized contractors. To provide an element of competition among the Tenderers in respect of any facilities, amenities, attendance, etc., to be provided by the successful Tenderer as prime Contractor for the use and convenience of the specialist contractors, each related provisional sum should be followed by an item in the Bill of Quantities inviting the Tenderer to quote a sum for such amenities, facilities, attendance, etc.

These Notes for Preparing a Bill of Quantities are intended only as information for the Procuring Entity or the person drafting the tendering document. They should not be included in the final tendering document.

4. The Bills of Quantities

The Bills of Quantities should be divided generally into the following sections:

a) Preambles
b) Preliminary items
c) Work Items
c) Day work Schedule; and
d) Provisional items
e) Summary.

5. The Summary to the Bills of Quantities will take this form or some other form but including these items.

SECTION V - BILLS OF QUANTITIES

PREAMBLE TO BILL OF QUANTITIES

1. The Bills of Quantities forms part of the Contract Documents and are to be read in conjunction with the Instructions to Bidders, Conditions of Contract Parts I and II, Specifications and Drawings.

2. The brief description of the items in the Bills of Quantities is purely for the purpose of identification, and in no way modifies or supersedes the detailed descriptions given in the conditions of Contract and Specifications for the full direction and description of work and materials.

3. The Quantities set forth in the Bills of Quantities are estimated, representing substantially the work to be carried out, and are given to provide a common basis for bidding and comparing of Bids. There is no guarantee to the Contractor that he will be required to carry out all the quantities of work indicated under any one particular item or group of items in the Bill of Quantities. The basis of payment shall be the Contractor's rates and the quantities of work actually done in fulfilment of his obligation under the Contract.

4. Payments will be made on completed milestones

5. Payments for emergency and/or instructed works will be paid as and when they occur using submitted rates and/or day works and shall require prior approval of the Employer.

6. The prices and rates inserted in the Bills of Quantities will be used for valuing the work executed, and the Engineer will only measure the whole of the works executed in accordance with this Contract.

7. A price or rate shall be entered in ink against every item in the Bills of Quantities with the exception of items that already have Provisional sums affixed thereto. The bidders are reminded that no “nil” or “included” rates or “lump-sum” discounts will be accepted. The rates for various items should include discounts if any. Bidders who fail to comply will be disqualified.

8. Provisional sums (including Day-works) in the Bills of Quantities shall be expended in whole or in part at the discretion of the Engineer.

9. The price and rates entered in the Bills of Quantities shall, except in-so-far as it is otherwise provided under the Contract, include all Constructional plant to be used, labour, insurance, supervision, compliance testing, materials, erection, maintenance of works, overheads and profits, taxes and duties together with all general risks, liabilities and obligations set out or implied in the Contract, transport, electricity and telephones, water, use and replenishment of all consumables, including those required under the contract by the Engineer and his staff.

10. Unless otherwise stated, all measurements shall be net taken on the finished work carried out in accordance with the details shown on the drawings or instructed, with no allowance for extra cuts or fills, waste or additional thickness necessary to obtain the minimum finished thickness or dimensions required in this Contract. Any work performed in excess or the requirements of the plans and specifications will not be paid for, unless ordered in writing by the Engineer.

Road
Code UNCL 59 Section Name
Package: UNCL 59 Bukunga-Magada

/KERRA/VHG/VHI/10%/008/039/055/2021-2022
Contractor 0

Bill of Quantities

Bill No.1	**General: Office administration and overheads/Preliminaries**				**Project:**
Item No.	**Description**	**Units**	**Quantity**	**Unit Bid Rate(Ksh)**	**Amount KSh**
01-50-016	Materials Investigation &Testing	KS	12000	1.00	12,000.00
01-60-001	Contract supervision	KS	184548.65	1.00	184,548.65
01-60-005	Publicity Sign Boards	NO	2		-
					-
					-
					-
					-
					-
					-
					-
					-
					-
					-
					-
					-
					-
					-
					-
					-
					-
					-
					-
					-
					-
					-
					-
					-
	Total Carried Forward to Summary:				

Road
Code UNCL 59 Section Name
Package: UNCL 59 Bukunga-Magada

/KERRA/VHG/VHI/10%/008/039/055/2021-2022
Contractor 0

Bill of Quantities

Page: 2

Bill No.4	**SITE CLEARANCE**				**Project:**
Item No.	**Description**	**Units**	**Quantity**	**Unit Bid Rate(Ksh)**	**Amount KSh**
04-50-004	Light Bush Clearing	M²	4000		-
					-
					-
					-
					-
					-
					-
					-
					-
					-
					-
					-
					-
					-
					-
					-
					-
					-
					-
					-
					-
					-
					-
					-
					-
					-
					-
					-
					-
	Total Carried Forward to Summary:				-

Road
Code UNCL 59 Section Name
Package: UNCL 59 Bukunga-Magada

/KERRA/VHG/VHI/10%/008/039/055/2021-2022
Contractor 0

Bill of Quantities

Page: 3

Bill No.8	**CULVERT AND DRAINAGE WORKS**				**Project:**
Item No.	**Description**	**Units**	**Quantity**	**Unit Bid Rate(Ksh)**	**Amount KSh**
08-60-003	Culvert Cleaning- Partially blocked - 600mm	MT	100		-
08-70-004	Provide and place Gabion Installation	NO	120		-
08-70-005	Provide and place Rock fill to Gabions	M³	240		-
					-
					-
					-
					-
					-
					-
					-
					-
					-
					-
					-
					-
					-
					-
					-
					-
					-
					-
					-
					-
					-
					-
					-
					-
					-
	Total Carried Forward to Summary:				-

Road
Code UNCL 59 Section Name
Package: UNCL 59 Bukunga-Magada

/KERRA/VHG/VHI/10%/008/039/055/2021-2022
Contractor 0

Bill of Quantities

Page: 4

Bill No.12	**NATURAL MATERIAL BASES AND SUBBASE**				**Project:**
Item No.	**Description**	**Units**	**Quantity**	**Unit Bid Rate(Ksh)**	**Amount KSh**
12-60-002	Provide, place, spread and compact Base Repair - Stabilized Gravel	M³	50		-
12-70-002	Excavation and spoiling of the existing bituminous layers to any distance where directed by the Engineer	M³	50		-
					-
					-
					-
					-
					-
					-
					-
					-
					-
					-
					-
					-
					-
					-
					-
					-
					-
					-
					-
					-
					-
					-
					-
					-
					-
					-
	Total Carried Forward to Summary:				-

Road
Code UNCL 59 Section Name
Package: UNCL 59 Bukunga-Magada

/KERRA/VHG/VHI/10%/008/039/055/2021-2022
Contractor 0

Bill of Quantities

Page: 5

Bill No.14	**CEMENT AND LIME TREATED SUBGRADE,SUBBASE AND BASE**				**Project:**
Item No.	**Description**	**Units**	**Quantity**	**Unit Bid Rate(Ksh)**	**Amount KSh**
14-50-008	Allow for the protection and curing of the treated material as specified	M²	50		-
					-
					-
					-
					-
					-
					-
					-
					-
					-
					-
					-
					-
					-
					-
					-
					-
					-
					-
					-
					-
					-
					-
					-
					-
					-
					-
					-
	Total Carried Forward to Summary:				-

Road
Code UNCL 59 Section Name
Package: UNCL 59 Bukunga-Magada

/KERRA/VHG/VHI/10%/008/039/055/2021-2022
Contractor 0

Bill of Quantities					Page: 6
Bill No.15	**BITUMINOUS SURFACE TREATMENT AND SURFACE DRESSING**				**Project:**
Item No.	**Description**	**Units**	**Quantity**	**Unit Bid Rate(Ksh)**	**Amount KSh**
15-50-001	Prepare surface to recieve treatment	M²	100		-
15-92-001	Provide and Spray MC 30 cut-back bitumen as prime coat to carriageway, shoulders, busbays and junctions at rate 0.8-1.2 lts/m2 as prime coat	L	500		-
15-93-002	Provide and spray K-160 as tack coat at a rate of 0.8-1.0 L/sq metre as directed by the Engineer	L	500		-
					-
					-
					-
					-
					-
					-
					-
					-
					-
					-
					-
					-
					-
					-
					-
					-
					-
	Total Carried Forward to Summary:				-

Road
Code UNCL 59 Section Name
Package: UNCL 59 Bukunga-Magada

/KERRA/VHG/VHI/10%/008/039/055/2021-2022
Contractor 0

Bill of Quantities

Page: 7

Bill No.16	**BITUMINOUS MIXES**				**Project:**
Item No.	**Description**	**Units**	**Quantity**	**Unit Bid Rate(Ksh)**	**Amount KSh**
16-80-001	Provide, lay and roll asphalt concrete type 1 (bitumen content 5-6% by weight) as directed by the Engineer	M³	30		-
					-
					-
					-
					-
					-
					-
					-
					-
					-
					-
					-
					-
					-
					-
					-
					-
					-
					-
					-
					-
					-
					-
					-
					-
					-
					-
					-
	Total Carried Forward to Summary:				-

Road
Code UNCL 59 Section Name
Package: UNCL 59 Bukunga-Magada

/KERRA/VHG/VHI/10%/008/039/055/2021-2022
Contractor 0

Bill of Quantities

Bill No.20	**ROAD FURNITURE REPAIR AND MAINTENANCE**				**Project:**
Item No.	**Description**	**Units**	**Quantity**	**Unit Bid Rate(Ksh)**	**Amount KSh**
20-50-018	Trees	LS	24000	1.00	24,000.00
					-
					-
					-
					-
					-
					-
					-
					-
					-
					-
					-
					-
					-
					-
					-
					-
					-
					-
					-
					-
					-
					-
					-
					-
					-
					-
					-
					-
	Total Carried Forward to Summary:				

Bill of Quantities

Page: 1

	Summary	**Project:**
Item No.	**Description**	**Amount (KShs)**
1	General: Office administration and overheads/Preliminaries	-
4	SITE CLEARANCE	-
8	CULVERT AND DRAINAGE WORKS	-
12	NATURAL MATERIAL BASES AND SUBBASE	-
14	CEMENT AND LIME TREATED SUBGRADE,SUBBASE AND BASE	-
15	BITUMINOUS SURFACE TREATMENT AND SURFACE DRESSING	-
16	BITUMINOUS MIXES	-
20	ROAD FURNITURE REPAIR AND MAINTENANCE	-
	Sub Total	-
	VAT @ 16 %	-
	Total	-
	Contingencies (@ 0 %)	-
	Carried to page on the form of Tender	-

SECTION VIII - GENERAL CONDITIONS OF CONTRACT

These General Conditions of Contract (GCC), read in conjunction with the Special Conditions of Contract (SCC) and other documents listed therein, should be a complete document expressing fairly the rights and obligations of both parties.

These General Conditions of Contract have been developed on the basis of considerable international experience in the drafting and management of contracts, bearing in mind a trend in the construction industry towards simpler, more straightforward language.

The GCC can be used for both smaller admeasurement contracts and lump sum contracts.

General Conditions of Contract

A. General

1. Definitions

Boldface type is used to identify defined terms.

a) **The Accepted Contract** Amount means the amount accepted in the Letter of Acceptance for the execution and completion of the Works and the remedying of any defects.

b) **The Activity Schedule** is a schedule of the activities comprising the construction, installation, testing, and commissioning of the Works in a lump sum contract. It includes a lump sum price for each activity, which is used for valuations and for assessing the effects of Variations and Compensation Events.

c) **The Adjudicator** is the person appointed jointly by the Procuring Entity and the Contractor to resolve disputes in the first instance, as provided for in GCC 23.

d) **Bill of Quantities** means the priced and completed Bill of Quantities forming part of the Bid.

e) **Compensation Events** are those defined in GCC Clause 42 hereunder.

f) **The Completion Date** is the date of completion of the Works as certified by the Project Manager, in accordance with GCC Sub-Clause 53.1.

g) **The Contract** is the Contract between the Procuring Entity and the Contractor to execute, complete, and maintain the Works. It consists of the documents listed in GCC Sub-Clause 2.3 below.

h) **The Contractor** is the party whose Bid to carry out the Works has been accepted by the Procuring Entity.

i) **The Contractor's Bid** is the completed bidding document submitted by the Contractor to the Procuring Entity.

j) **The Contract Price** is the Accepted Contract Amount stated in the Letter of Acceptance and thereafter as adjusted in accordance with the Contract.

k) **Days** are calendar days; months are calendar months.

l) **Day work**s are varied work inputs subject to payment on a time basis for the Contractor's employees and Equipment, in addition to payments for associated Materials and Plant.

m) **A Defect** is any part of the Works not completed in accordance with the Contract.

n) **The Defects** Liability Certificate is the certificate issued by Project Manager upon correction of defects by the Contractor.

o) **The Defects Liability Period** is the period **named in the SCC** pursuant to Sub-Clause 34.1 and calculated from the Completion Date.

p) **Drawings** means the drawings of the Works, as included in the Contract, and any additional and modified drawings issued by (or on behalf of) the Procuring Entity in accordance with the Contract, include calculations and other information provided or approved by the Project Manager for the execution of the Contract.

q) **The Procuring Entity** is the party who employs the Contractor to carry out the Works, **as specified in the SCC,** who is also the Procuring Entity.

r) **Equipmen**t is the Contractor's machinery and vehicles brought temporarily to the Site to construct the Works.

s) **"In writing" or "written"** means hand-written, type-written, printed or electronically made, and resulting in a permanent record;

t) The Initial Contract Price is the Contract Price listed in the Procuring Entity's Letter of Acceptance.

u) **The Intended Completion Date** is the date on which it is intended that the Contractor shall complete the Works. The Intended Completion Date is **specified in the SCC**. The Intended Completion Date may be revised only by the Project Manager by issuing an extension of time or an acceleration order.

v) **Materials** are all supplies, including consumables, used by the Contractor for incorporation in the Works.

w) **Plant i**s any integral part of the Works that shall have a mechanical, electrical, chemical, or biological function.

x) **The Project Manager** is the person **named in the SCC** (or any other competent person appointed by the Procuring Entity and notified to the Contractor, to act in replacement of the Project Manager) who is responsible for supervising the execution of the Works and administering the Contract.

y) **SCC** means Special Conditions of Contract.

z) **The Site** is the area of the works as **defined as such in the SCC**.

aa) **Site Investigation Reports** are those that were included in the bidding document and are factual and interpretative reports about the surface and subsurface conditions at the Site.

bb) **Specification** means the Specification of the Works included in the Contract and any modification or addition made or approved by the Project Manager.

cc) **The Start Date** is **given in the SCC**. It is the latest date when the Contractor shall commence execution of the Works. It does not necessarily coincide with any of the Site Possession Dates.

dd) **A Subcontractor** is a person or corporate body who has a Contract with the Contractor to carry out a part of the work in the Contract, which includes work on the Site.

ee) Temporary Works are works designed, constructed, installed, and removed by the Contractor that are needed for construction or installation of the Works.

ff) A Variation is an instruction given by the Project Manager which varies the Works.

gg) The Works are what the Contract requires the Contractor to construct, install, and turn over to the Procuring Entity, **as defined in the SCC**.

2. Interpretation

In interpreting these GCC, words indicating one gender include all genders. Words indicating the singular also include the plural and words indicating the plural also include the singular. Headings have no significance. Words have their normal meaning under the language of the Contract unless specifically defined. The Project Manager shall provide instructions clarifying queries about these GCC.

If sectional completion is **specified in the SCC**, references in the GCC to the Works, the Completion Date, and the Intended Completion Date apply to any Section of the Works (other than references to the Completion Date and Intended Completion Date for the whole of the Works).

The documents forming the Contract shall be interpreted in the following order of priority:

a) Agreement,
b) Letter of Acceptance,
c) Contractor's Bid,
d) Special Conditions of Contract,
e) General Conditions of Contract, including Appendices,
f) Specifications,
g) Drawings,
h) Bill of Quantities[6], and
i) any other document **listed in the SCC** as forming part of the Contract.

[6] *In lump sum contracts, delete "Bill of Quantities" and replace with "Activity Schedule."*

3. Language and Law

The language of the Contract is English Language and the law governing the Contract are the Laws of Kenya.

Throughout the execution of the Contract, the Contractor shall comply with the import of goods and services prohibitions in the Procuring Entity's Country when

a) as a matter of law or official regulations, Kenya prohibits commercial relations with that country; or

b) by an act of compliance with a decision of the United Nations Security Council taken under Chapter VII of the Charter of the United Nations, Kenya prohibits any import of goods from that country or any payments to any country, person, or entity in that country.

4. Project Manager's Decisions

Except where otherwise specifically stated, the Project Manager shall decide contractual matters between the Procuring Entity and the Contractor in the role representing the Procuring Entity.

5. Delegation

Otherwise **specified in the SCC,** the Project Manager may delegate any of his duties and responsibilities to other people, except to the Adjudicator, after notifying the Contractor, and may revoke any delegation after notifying the Contractor.

6. Communications

Communications between parties that are referred to in the Conditions shall be effective only when in writing. A notice shall be effective only when it is delivered.

7. Subcontracting

The Contractor may subcontract with the approval of the Project Manager, but may not assign the Contract without the approval of the Procuring Entity in writing. Subcontracting shall not alter the Contractor's obligations.

8. Other Contractors

The Contractor shall cooperate and share the Site with other contractors, public authorities, utilities, and the Procuring Entity between the dates given in the Schedule of Other Contractors, as **referred to in the SCC.** The Contractor shall also provide facilities and services for them as described in the Schedule. The Procuring Entity may modify the Schedule of Other Contractors, and shall notify the Contractor of any such modification.

9. Personnel and Equipment

The Contractor shall employ the key personnel and use the equipment identified in its Bid, to carry out the Works or other personnel and equipment approved by the Project Manager. The Project Manager shall approve any proposed replacement of key personnel and equipment only if their relevant qualifications or characteristics are substantially equal to or better than those proposed in the Bid.

If the Project Manager asks the Contractor to remove a person who is a member of the Contractor's staff or work force, stating the reasons, the Contractor shall ensure that the person leaves the Site within seven days and has no further connection with the work in the Contract.

If the Procuring Entity, Project Manager or Contractor determines, that any employee of the Contractor be determined to have engaged in Fraud and Corruption during the execution of the Works, then that employee shall be removed in accordance with Clause 9.2 above.

10. Procuring Entity's and Contractor's Risks

The Procuring Entity carries the risks which this Contract states are Procuring Entity's risks, and the Contractor carries the risks which this Contract states are Contractor's risks.

11. Procuring Entity's Risks

From the Start Date until the Defects Liability Certificate has been issued, the following are Procuring Entity's risks:

a) The risk of personal injury, death, or loss of or damage to property (excluding the Works, Plant, Materials, and Equipment), which are due to

   i) use or occupation of the Site by the Works or for the purpose of the Works, which is the unavoidable result of the Works or

   ii) negligence, breach of statutory duty, or interference with any legal right by the Procuring Entity or by any person employed by or contracted to him except the Contractor.

b) The risk of damage to the Works, Plant, Materials, and Equipment to the extent that it is due to a fault of the Procuring Entity or in the Procuring Entity's design, or due to war or radioactive contamination directly affecting the country where the Works are to be executed.

From the Completion Date until the Defects Liability Certificate has been issued, the risk of loss of or damage to the Works, Plant, and Materials is a Procuring Entity's risk except loss or damage due to

a) a Defect which existed on the Completion Date,

b) an event occurring before the Completion Date, which was not itself a Procuring Entity's risk, or

c) the activities of the Contractor on the Site after the Completion Date.

12. Contractor's Risks

From the Starting Date until the Defects Liability Certificate has been issued, the risks of personal injury, death, and loss of or damage to property (including, without limitation, the Works, Plant, Materials, and Equipment) which are not Procuring Entity's risks are Contractor's risks.

13. Insurance

The Contractor shall provide, in the joint names of the Procuring Entity and the Contractor, insurance cover from the Start Date to the end of the Defects Liability Period, in the amounts and deductibles **stated in the SCC** for the following events which are due to the Contractor's risks:

a) loss of or damage to the Works, Plant, and Materials;

b) loss of or damage to Equipment;

c) loss of or damage to property (except the Works, Plant, Materials, and Equipment) in connection with the Contract; and

d) personal injury or death.

Policies and certificates for insurance shall be delivered by the Contractor to the Project Manager for the Project Manager's approval before the Start Date. All such insurance shall provide for compensation to be payable in the types and proportions of currencies required to rectify the loss or damage incurred.

If the Contractor does not provide any of the policies and certificates required, the Procuring Entity may effect the insurance which the Contractor should have provided and recover the premiums the Procuring Entity has paid from payments otherwise due to the Contractor or, if no payment is due, the payment of the premiums shall be a debt due.

Alterations to the terms of an insurance shall not be made without the approval of the Project Manager.

Both parties shall comply with any conditions of the insurance policies.

14. Site Data

The Contractor shall be deemed to have examined any Site Data **referred to in the SCC**, supplemented by any information available to the Contractor.

15. Contractor to Construct the Works

The Contractor shall construct and install the Works in accordance with the Specifications and Drawings.

16. The Works to Be Completed by the Intended Completion Date

The Contractor may commence execution of the Works on the Start Date and shall carry out the Works in accordance with the Program submitted by the Contractor, as updated with the approval of the Project Manager, and complete them by the Intended Completion Date.

17. Approval by the Project Manager

The Contractor shall submit Specifications and Drawings showing the proposed Temporary Works to the Project Manager, for his approval.

The Contractor shall be responsible for design of Temporary Works.

The Project Manager's approval shall not alter the Contractor's responsibility for design of the Temporary Works.

The Contractor shall obtain approval of third parties to the design of the Temporary Works, where required.

All Drawings prepared by the Contractor for the execution of the temporary or permanent Works, are subject to prior approval by the Project Manager before this use.

18. Safety

The Contractor shall be responsible for the safety of all activities on the Site.

19. Discoveries

Anything of historical or other interest or of significant value unexpectedly discovered on the Site shall be the property of the Procuring Entity. The Contractor shall notify the Project Manager of such discoveries and carry out the Project Manager's instructions for dealing with them.

20. Possession of the Site

The Procuring Entity shall give possession of all parts of the Site to the Contractor. If possession of a part is not given by the date **stated in the SCC,** the Procuring Entity shall be deemed to have delayed the start of the relevant activities, and this shall be a Compensation Event.

21. Access to the Site

The Contractor shall allow the Project Manager and any person authorized by the Project Manager access to the Site and to any place where work in connection with the Contract is being carried out or is intended to be carried out.

22. Instructions, Inspections and Audits

The Contractor shall carry out all instructions of the Project Manager which comply with the applicable laws where the Site is located.

The Contractor shall keep, and shall make all reasonable efforts to cause its Subcontractors and sub-consultants to keep, accurate and systematic accounts and records in respect of the Works in such form and details as will clearly identify relevant time changes and costs.

The Contractor shall permit and shall cause its subcontractors and sub-consultants to permit, the Procuring Entity and/or persons appointed by the Public Procurement Regulatory Authority to inspect the Site and/or the accounts and records relating to the procurement process, selection and/or contract execution, and to have such accounts and records audited by auditors appointed by the Public Procurement Regulatory Authority. The Contractor's and its Subcontractors' and sub-consultants' attention is drawn to Sub-Clause 25.1 (Fraud and Corruption) which provides, inter alia, that acts intended to materially impede the exercise of the Public Procurement Regulatory Authority's inspection and audit rights constitute a prohibited practice subject to contract termination (as well as to a determination of ineligibility pursuant to the Public Procurement Regulatory Authority's prevailing sanctions procedures).

23. Appointment of the Adjudicator

The Adjudicator shall be appointed jointly by the Procuring Entity and the Contractor, at the time of the Procuring Entity's issuance of the Letter of Acceptance. If, in the Letter of Acceptance, the Procuring Entity does not agree on the appointment of the Adjudicator, the Procuring Entity will request the Appointing Authority **designated in the SCC**, to appoint the Adjudicator within 14 days of receipt of such request.

Should the Adjudicator resign or die, or should the Procuring Entity and the Contractor agree that the Adjudicator is not functioning in accordance with the provisions of the Contract, a new Adjudicator shall be jointly appointed by the Procuring Entity and the Contractor. In case of disagreement between the Procuring Entity and the Contractor, within 30 days, the Adjudicator shall be designated by the Appointing Authority **designated in the SCC** at the request of either party, within 14 days of receipt of such request.

24. Settlement of Claims and Disputes

Contractor's Claims

If the Contractor considers itself to be entitled to any extension of the Time for Completion and/or any additional payment, under any Clause of these Conditions or otherwise in connection with the Contract, the Contractor shall give Notice to the Project Manager, describing the event or circumstance giving rise to the claim. The notice shall be given as soon as practicable, and not later than 30 days after the Contractor became aware, or should have become aware, of the event or circumstance.

If the Contractor fails to give notice of a claim within such period of 30 days, the Time for Completion shall not be extended, the Contractor shall not be entitled to additional payment, and the Procuring Entity shall be discharged from all liability in connection with the claim. Otherwise, the following provisions of this Sub-Clause shall apply.

The Contractor shall also submit any other notices which are required by the Contract, and supporting particulars for the claim, all as relevant to such event or circumstance.

The Contractor shall keep such contemporary records as may be necessary to substantiate any claim, either on the Site or at another location acceptable to the Project Manager. Without admitting the Procuring Entity's liability, the Project Manager may, after receiving any notice under this Sub-Clause, monitor the record-keeping and/or instruct the Contractor to keep further contemporary records. The Contractor shall permit the Project Manager to inspect all these records, and shall (if instructed) submit copies to the Project Manager.

Within 42 days after the Contractor became aware (or should have become aware) of the event or circumstance giving rise to the claim, or within such other period as may be proposed by the Contractor and approved by the Project Manager, the Contractor shall send to the Project Manager a fully detailed claim which includes full supporting particulars of the basis of the claim and of the extension of time and/or additional payment claimed. If the event or circumstance giving rise to the claim has a continuing effect:

a) this fully detailed claim shall be considered as interim;
b) the Contractor shall send further interim claims at monthly intervals, giving the accumulated delay and/or amount claimed, and such further particulars as the Project Manager may reasonably require; and
c) the Contractor shall send a final claim within 30 days after the end of the effects resulting from the event or circumstance, or within such other period as may be proposed by the Contractor and approved by the Project Manager.

Within 42 days after receiving a Notice of a claim or any further particulars supporting a previous claim, or within such other period as may be proposed by the Project Manager and approved by the Contractor, the Project Manager shall respond with approval, or with disapproval and detailed comments. He may also request any necessary further particulars, but shall nevertheless give his response on the principles of the claim within the above defined time period.

Within the above defined period of 42 days, the Project Manager shall proceed in accordance with Sub-Clause

3.5 [Determinations] to agree or determine (i) the extension (if any) of the Time for Completion (before or after its expiry) in accordance with Sub-Clause 8.4 [Extension of Time for Completion], and/or (ii) the additional payment (if any) to which the Contractor is entitled under the Contract.

Each Payment Certificate shall include such additional payment for any claim as has been reasonably substantiated as due under the relevant provision of the Contract. Unless and until the particulars supplied are sufficient to substantiate the whole of the claim, the Contractor shall only be entitled to payment for such part of the claim as he has been able to substantiate.

If the Project Manager does not respond within the timeframe defined in this Clause, either Party may consider that the claim is rejected by the Project Manager and any of the Parties may refer to Arbitration in accordance with Sub-Clause 24.4 [Arbitration].

The requirements of this Sub-Clause are in addition to those of any other Sub-Clause which may apply to a claim. If the Contractor fails to comply with this or another Sub-Clause in relation to any claim, any extension of time and/or additional payment shall take account of the extent (if any) to which the failure has prevented or prejudiced proper investigation of the claim, unless the claim is excluded under the second paragraph of this Sub-Clause 24.3.

Amicable Settlement

Where a notice of a claim has been given, both Parties shall attempt to settle the dispute amicably before the commencement of arbitration. However, unless both Parties agree otherwise, the Party giving a notice of a claim in accordance with Sub-Clause 24.1 above should move to commence arbitration after the fifty-sixth day from the day on which a notice of a claim was given, even if no attempt at an amicable settlement has been made.

Matters that may be referred to arbitration

Notwithstanding anything stated herein the following matters may be referred to arbitration before the practical completion of the Works or abandonment of the Works or termination of the Contract by either party:

a) The appointment of a replacement Project Manager upon the said person ceasing to act.
b) Whether or not the issue of an instruction by the Project Manager is empowered by these Conditions.
c) Whether or not a certificate has been improperly withheld or is not in accordance with these Conditions.
e) Any dispute arising in respect of war risks or war damage.
f) All other matters shall only be referred to arbitration after the completion or alleged completion of the Works or termination or alleged termination of the Contract, unless the Procuring Entity and the Contractor agree otherwise in writing.

Arbitration

Any claim or dispute between the Parties arising out of or in connection with the Contract not settled amicably in accordance with Sub-Clause 24.3 shall be finally settled by arbitration.

No arbitration proceedings shall be commenced on any claim or dispute where notice of a claim or dispute has not been given by the applying party within ninety days of the occurrence or discovery of the matter or issue giving rise to the dispute.

Notwithstanding the issue of a notice as stated above, the arbitration of such a claim or dispute shall not commence unless an attempt has in the first instance been made by the parties to settle such claim or dispute amicably with or without the assistance of third parties. Proof of such attempt shall be required.

The Arbitrator shall, without prejudice to the generality of his powers, have powers to direct such measurements, computations, tests or valuations as may in his opinion be desirable in order to determine the rights of the parties and assess and award any sums which ought to have been the subject of or included in any certificate.

The Arbitrator shall, without prejudice to the generality of his powers, have powers to open up, review and revise any certificate, opinion, decision, requirement or notice and to determine all matters in dispute which shall be submitted to him in the same manner as if no such certificate, opinion, decision requirement or notice had been given.

The arbitrators shall have full power to open up, review and revise any certificate, determination, instruction, opinion or valuation of the Project Manager, relevant to the dispute. Nothing shall disqualify representatives of the Parties and the Project Manager from being called as a witness and giving evidence before the arbitrators on any matter whatsoever relevant to the dispute.

Neither Party shall be limited in the proceedings before the arbitrators to the evidence, or to the reasons for dissatisfaction given in its Notice of Dissatisfaction.

Arbitration may be commenced prior to or after completion of the Works. The obligations of the Parties, and the Project Manager shall not be altered by reason of any arbitration being conducted during the progress of the Works.

24.4.8 The terms of the remuneration of each or all the members of Arbitration shall be mutually agreed upon by the Parties when agreeing the terms of appointment. Each Party shall be responsible for paying one-half of this remuneration.

Arbitration with National Contractors

If the Contract is with national contractors, arbitration proceedings will be conducted in accordance with the Arbitration Laws of Kenya. In case of any claim or dispute, such claim or dispute shall be notified in writing by either party to the other with a request to submit it to arbitration and to concur in the appointment of an Arbitrator within thirty days of the notice. The dispute shall be referred to the arbitration and final decision of a person to be agreed between the parties. Failing agreement to concur in the appointment of an Arbitrator, the Arbitrator shall be appointed, on the request of the applying party, by the Chairman or Vice Chairman of any of the following professional institutions;

i) Architectural Association of Kenya
ii) Institute of Quantity Surveyors of Kenya
iii) Association of Consulting Engineers of Kenya
iv) Chartered Institute of Arbitrators (Kenya Branch)
v) Institution of Engineers of Kenya

The institution written to first by the aggrieved party shall take precedence over all other institutions.

Alternative Arbitration Proceedings

Alternatively, the Parties may refer the matter to the Nairobi Centre for International Arbitration (NCIA) which offers a neutral venue for the conduct of national and international arbitration with commitment to providing institutional support to the arbitral process.

Failure to Comply with Arbitrator's Decision

The award of such Arbitrator shall be final and binding upon the parties.

In the event that a Party fails to comply with a final and binding Arbitrator's decision, then the other Party may, without prejudice to any other rights it may have, refer the matter to a competent court of law.

Contract operations to continue

Notwithstanding any reference to arbitration herein,

a) the parties shall continue to perform their respective obligations under the Contract unless they otherwise agree; and
b) the Procuring Entity shall pay the Contractor any monies due the Contractor.

25. Fraud and Corruption

The Government requires compliance with the country's Anti-Corruption laws and its prevailing sanctions policies and procedures as set forth in the Constitution of Kenya and its Statutes.

The Procuring Entity requires the Contractor to disclose any commissions or fees that may have been paid or are to be paid to agents or any other party with respect to the bidding process or execution of the Contract. The information disclosed must include at least the name and address of the agent or other party, the amount and currency, and the purpose of the commission, gratuity or fee.

B. Time Control

1. Program

Within the time **stated in the SCC**, after the date of the Letter of Acceptance, the Contractor shall submit to the Project Manager for approval a Program showing the general methods, arrangements, order, and timing for all the activities in the Works. In the case of a lump sum contract, the activities in the Program shall be consistent with those in the Activity Schedule.

An update of the Program shall be a program showing the actual progress achieved on each activity and the effect of the progress achieved on the timing of the remaining work, including any changes to the sequence of the activities.

The Contractor shall submit to the Project Manager for approval an updated Program at intervals no longer than the period **stated in the SCC.** If the Contractor does not submit an updated Program within this period, the Project Manager may withhold the amount **stated in the SCC** from the next payment certificate and continue to withhold this amount until the next payment after the date on which the overdue Program has been submitted. In the case of a lump sum contract, the Contractor shall provide an updated Activity Schedule within 14 days of being instructed to by the Project Manager.

The Project Manager's approval of the Program shall not alter the Contractor's obligations. The Contractor may revise the Program and submit it to the Project Manager again at any time. A revised Program shall show the effect of Variations and Compensation Events.

2. Extension of the Intended Completion Date

The Project Manager shall extend the Intended Completion Date if a Compensation Event occurs or a Variation is issued which makes it impossible for Completion to be achieved by the Intended Completion Date without the Contractor taking steps to accelerate the remaining work, which would cause the Contractor to incur additional cost.

The Project Manager shall decide whether and by how much to extend the Intended Completion Date within 21 days of the Contractor asking the Project Manager for a decision upon the effect of a Compensation Event or Variation and submitting full supporting information. If the Contractor has failed to give early warning of a delay or has failed to cooperate in dealing with a delay, the delay by this failure shall not be considered in assessing the new Intended Completion Date.

3. Acceleration

When the Procuring Entity wants the Contractor to finish before the Intended Completion Date, the Project Manager shall obtain priced proposals for achieving the necessary acceleration from the Contractor. If the Procuring Entity accepts these proposals, the Intended Completion Date shall be adjusted accordingly and confirmed by both the Procuring Entity and the Contractor.

If the Contractor's priced proposals for an acceleration are accepted by the Procuring Entity, they are incorporated in the Contract Price and treated as a Variation.

4. Delays Ordered by the Project Manager

The Project Manager may instruct the Contractor to delay the start or progress of any activity within the Works.

5. Management Meetings

Either the Project Manager or the Contractor may require the other to attend a management meeting. The business of a management meeting shall be to review the plans for remaining work and to deal with matters raised in accordance with the early warning procedure.

The Project Manager shall record the business of management meetings and provide copies of the record to those attending the meeting and to the Procuring Entity. The responsibility of the parties for actions to be

taken shall be decided by the Project Manager either at the management meeting or after the management meeting and stated in writing to all who attended the meeting.

6. Early Warning

The Contractor shall warn the Project Manager at the earliest opportunity of specific likely future events or circumstances that may adversely affect the quality of the work, increase the Contract Price, or delay the execution of the Works. The Project Manager may require the Contractor to provide an estimate of the expected effect of the future event or circumstance on the Contract Price and Completion Date. The estimate shall be provided by the Contractor as soon as reasonably possible.

The Contractor shall cooperate with the Project Manager in making and considering proposals for how the effect of such an event or circumstance can be avoided or reduced by anyone involved in the work and in carrying out any resulting instruction of the Project Manager.

C. Quality Control

1. Identifying Defects

The Project Manager shall check the Contractor's work and notify the Contractor of any Defects that are found. Such checking shall not affect the Contractor's responsibilities. The Project Manager may instruct the Contractor to search for a Defect and to uncover and test any work that the Project Manager considers may have a Defect.

2. Tests

If the Project Manager instructs the Contractor to carry out a test not specified in the Specification to check whether any work has a Defect and the test shows that it does, the Contractor shall pay for the test and any samples. If there is no Defect, the test shall be a Compensation Event.

3. Correction of Defects

The Project Manager shall give notice to the Contractor of any Defects before the end of the Defects Liability Period, which begins at Completion, and is **defined in the SCC.** The Defects Liability Period shall be extended for as long as Defects remain to be corrected.

Every time notice of a Defect is given, the Contractor shall correct the notified Defect within the length of time specified by the Project Manager's notice.

4. Uncorrected Defects

If the Contractor has not corrected a Defect within the time specified in the Project Manager's notice, the Project Manager shall assess the cost of having the Defect corrected, and the Contractor shall pay this amount.

D. Cost Control

1. Contract Price[7]

The Bill of Quantities shall contain priced items for the Works to be performed by the Contractor. The Bill of Quantities is used to calculate the Contract Price. The Contractor will be paid for the quantity of the work accomplished at the rate in the Bill of Quantities for each item.

2. Changes in the Contract Price[8]

If the final quantity of the work done differs from the quantity in the Bill of Quantities for the particular item by more than 25 percent, provided the change exceeds 1 percent of the Initial Contract Price, the Project Manager shall adjust the rate to allow for the change. The Project Manager shall not adjust rates from changes in quantities if thereby the Initial Contract Price is exceeded by more than 15 percent, except with the prior approval of the Procuring Entity.

If requested by the Project Manager, the Contractor shall provide the Project Manager with a detailed cost breakdown of any rate in the Bill of Quantities.

3. Variations

All Variations shall be included in updated Programs[9] produced by the Contractor.

The Contractor shall provide the Project Manager with a quotation for carrying out the Variation when requested to do so by the Project Manager. The Project Manager shall assess the quotation, which shall be given within seven (7) days of the request or within any longer period stated by the Project Manager and before the Variation is ordered.

If the Contractor's quotation is unreasonable, the Project Manager may order the Variation and make a change to the Contract Price, which shall be based on the Project Manager's own forecast of the effects of the Variation on the Contractor's costs.

If the Project Manager decides that the urgency of varying the work would prevent a quotation being given and considered without delaying the work, no quotation shall be given and the Variation shall be treated as a Compensation Event.

The Contractor shall not be entitled to additional payment for costs that could have been avoided by giving early warning.

If the work in the Variation corresponds to an item description in the Bill of Quantities and if, in the opinion of the Project Manager, the quantity of work above the limit stated in Sub-Clause 39.1 or the timing of its execution do not cause the cost per unit of quantity to change, the rate in the Bill of Quantities shall be used to calculate the value of the Variation. If the cost per unit of quantity changes, or if the nature or timing of the work in the Variation does not correspond with items in the Bill of Quantities, the quotation by the Contractor shall be in the form of new rates for the relevant items of work[10].

Value Engineering: The Contractor may prepare, at its own cost, a value engineering proposal at any time during the performance of the contract. The value engineering proposal shall, at a minimum, include the following;

a) the proposed change(s), and a description of the difference to the existing contract requirements;
b) a full cost/benefit analysis of the proposed change(s) including a description and estimate of costs (including life cycle costs) the Procuring Entity may incur in implementing the value engineering proposal; and
c) a description of any effect(s) of the change on performance/functionality.

The Procuring Entity may accept the value engineering proposal if the proposal demonstrates benefits that:

a) accelerate the contract completion period; or
b) reduce the Contract Price or the life cycle costs to the Procuring Entity; or
c) improve the quality, efficiency, safety or sustainability of the Facilities; or
d) yield any other benefits to the Procuring Entity, without compromising the functionality of the Works.

If the value engineering proposal is approved by the Procuring Entity and results in:

a) a reduction of the Contract Price; the amount to be paid to the Contractor shall be the **percentage specified in the SCC** of the reduction in the Contract Price; or
b) an increase in the Contract Price; but results in a reduction in life cycle costs due to any benefit described in (a) to (d) above, the amount to be paid to the Contractor shall be the full increase in the Contract Price.

4. Cash Flow Forecasts

When the Program[11], is updated, the Contractor shall provide the Project Manager with an updated cash flow forecast. The cash flow forecast shall include different currencies, as defined in the Contract, converted as necessary using the Contract exchange rates.

---

[7] *In lump sum contracts, replace GCC Sub-Clauses 36.1 as follows:*
36.1 The Contractor shall provide updated Activity Schedules within 14 days of being instructed to by the Project Manager. The Activity Schedule shall contain the priced activities for the Works to be performed by the Contractor. The Activity Schedule is used to monitor and control the performance of activities on which basis the Contractor will be paid. If payment for materials on site shall be made separately, the Contractor shall show delivery of Materials to the Site separately on the Activity Schedule.

[8]*In lump sum contracts, replace entire GCC Clause 37 with new GCC Sub-Clause 37.1, as follows:*
The Activity Schedule shall be amended by the Contractor to accommodate changes of Program or method of working made at the Contractor's own discretion. Prices in the Activity Schedule shall not be altered when the Contractor makes such changes to the Activity Schedule.
[9]*In lump sum contracts, add "and Activity Schedules" after "Programs."* [10]*In lump sum contracts, delete this paragraph.*

5. Payment Certificates

The Contractor shall submit to the Project Manager monthly statements of the estimated value of the work executed less the cumulative amount certified previously.

The Project Manager shall check the Contractor's monthly statement and certify the amount to be paid to the Contractor.

The value of work executed shall be determined by the Project Manager.

The value of work executed shall comprise the value of the quantities of work in the Bill of Quantities that have been completed[12].

The value of work executed shall include the valuation of Variations and Compensation Events.

The Project Manager may exclude any item certified in a previous certificate or reduce the proportion of any item previously certified in any certificate in the light of later information.

Where the contract price is different from the corrected tender price, in order to ensure the contractor is not paid less or more relative to the contract price (*which would be the tender price*), payment valuation certificates and variation orders on omissions and additions valued based on rates in the Bill of Quantities or schedule of rates in the Tender, will be adjusted by a plus or minus percentage. The percentage already worked out during tender evaluation is worked out as follows: *(corrected tender price – tender price)/tender price X 100*.

6. Payments

Payments shall be adjusted for deductions for advance payments and retention. The Procuring Entity shall pay the Contractor the amounts certified by the Project Manager within 30 days of the date of each certificate. If the Procuring Entity makes a late payment, the Contractor shall be paid interest on the late payment in the next payment. Interest shall be calculated from the date by which the payment should have been made up to the date when the late payment is made at the prevailing rate of interest for commercial borrowing for each of the currencies in which payments are made.

If an amount certified is increased in a later certificate or as a result of an award by the Adjudicator or an Arbitrator, the Contractor shall be paid interest upon the delayed payment as set out in this clause. Interest shall be calculated from the date upon which the increased amount would have been certified in the absence of dispute.

Unless otherwise stated, all payments and deductions shall be paid or charged in the proportions of currencies comprising the Contract Price.

Items of the Works for which no rate or price has been entered in shall not be paid for by the Procuring Entity and shall be deemed covered by other rates and prices in the Contract.

7. Compensation Events

The following shall be Compensation Events:

a) The Procuring Entity does not give access to a part of the Site by the Site Possession Date pursuant to GCC Sub-Clause 20.1.

b) The Procuring Entity modifies the Schedule of Other Contractors in a way that affects the work of the Contractor under the Contract.

c) The Project Manager orders a delay or does not issue Drawings, Specifications, or instructions required for execution of the Works on time.

d) The Project Manager instructs the Contractor to uncover or to carry out additional tests upon work, which is then found to have no Defects.

e) The Project Manager unreasonably does not approve a subcontract to be let.

---

[11] *In lump sum contracts, add "or Activity Schedule" after "Program."*

[12] *In lump sum contracts, replace this paragraph with the following: "The value of work executed shall comprise the value of completed activities in the Activity Schedule."*

f) Ground conditions are substantially more adverse than could reasonably have been assumed before issuance of the Letter of Acceptance from the information issued to bidders (including the Site Investigation Reports), from information available publicly and from a visual inspection of the Site.

g) The Project Manager gives an instruction for dealing with an unforeseen condition, caused by the Procuring Entity, or additional work required for safety or other reasons.

h) Other contractors, public authorities, utilities, or the Procuring Entity does not work within the dates and other constraints stated in the Contract, and they cause delay or extra cost to the Contractor.

i) The advance payment is delayed.

j) The effects on the Contractor of any of the Procuring Entity's Risks.

k) The Project Manager unreasonably delays issuing a Certificate of Completion.

If a Compensation Event would cause additional cost or would prevent the work being completed before the Intended Completion Date, the Contract Price shall be increased and/or the Intended Completion Date shall be extended. The Project Manager shall decide whether and by how much the Contract Price shall be increased and whether and by how much the Intended Completion Date shall be extended.

As soon as information demonstrating the effect of each Compensation Event upon the Contractor's forecast cost has been provided by the Contractor, it shall be assessed by the Project Manager, and the Contract Price shall be adjusted accordingly. If the Contractor's forecast is deemed unreasonable, the Project Manager shall adjust the Contract Price based on the Project Manager's own forecast. The Project Manager shall assume that the Contractor shall react competently and promptly to the event.

The Contractor shall not be entitled to compensation to the extent that the Procuring Entity's interests are adversely affected by the Contractor's not having given early warning or not having cooperated with the Project Manager.

8. Tax

The Project Manager shall adjust the Contract Price if taxes, duties, and other levies are changed between the date 30 days before the submission of bids for the Contract and the date of the last Completion certificate. The adjustment shall be the change in the amount of tax payable by the Contractor, provided such changes are not already reflected in the Contract Price or are a result of GCC Clause 44.

9. Currency y of Payment

All payments under the contract shall be made in Kenya Shillings

10. Price Adjustment

Prices shall be adjusted for fluctuations in the cost of inputs only if **provided for in the SCC.** If so provided, the amounts certified in each payment certificate, before deducting for Advance Payment, shall be adjusted by applying the respective price adjustment factor to the payment amounts due in each currency. A separate formula of the type specified below applies:

P = A + B Im/Io

where: P is the adjustment factor for the portion of the Contract Price payable.

A and B are coefficients[13] **specified in the SCC,** representing the non-adjustable and adjustable portions, respectively, of the Contract Price payable and Im is the index prevailing at the end of the month being invoiced and IOC is the index prevailing 30 days before Bid opening for inputs payable.

If the value of the index is changed after it has been used in a calculation, the calculation shall be corrected and an adjustment made in the next payment certificate. The index value shall be deemed to take account of all changes in cost due to fluctuations in costs.

11. Retention

The Procuring Entity shall retain from each payment due to the Contractor the proportion **stated in the SCC** until Completion of the whole of the Works.

Upon the issue of a Certificate of Completion of the Works by the Project Manager, in accordance with GCC 53.1,

half the total amount retained shall be repaid to the Contractor and half when the Defects Liability Period has passed and the Project Manager has certified that all Defects notified by the Project Manager to the Contractor before the end of this period have been corrected. The Contractor may substitute retention money with an "on demand" Bank guarantee.

12. Liquidated Damages

The Contractor shall pay liquidated damages to the Procuring Entity at the rate per day **stated in the SCC** for each day that the Completion Date is later than the Intended Completion Date. The total amount of liquidated damages shall not exceed the amount **defined in the SCC.** The Procuring Entity may deduct liquidated damages from payments due to the Contractor. Payment of liquidated damages shall not affect the Contractor's liabilities.

If the Intended Completion Date is extended after liquidated damages have been paid, the Project Manager shall correct any overpayment of liquidated damages by the Contractor by adjusting the next payment certificate. The Contractor shall be paid interest on the overpayment, calculated from the date of payment to the date of repayment, at the rates specified in GCC Sub-Clause 41.1.

13. Bonus

The Contractor shall be paid a Bonus calculated at the rate per calendar day **stated in the SCC** for each day (less any days for which the Contractor is paid for acceleration) that the Completion is earlier than the Intended Completion Date. The Project Manager shall certify that the Works are complete, although they may not be due to be complete.

14. Advance Payment

The Procuring Entity shall make advance payment to the Contractor of the amounts **stated in the SCC** by the date **stated in the SCC,** against provision by the Contractor of an Unconditional Bank Guarantee in a form and by a bank acceptable to the Procuring Entity in amounts and currencies equal to the advance payment. The Guarantee shall remain effective until the advance payment has been repaid, but the amount of the Guarantee shall be progressively reduced by the amounts repaid by the Contractor. Interest shall not be charged on the advance payment.

The Contractor is to use the advance payment only to pay for Equipment, Plant, Materials, and mobilization expenses required specifically for execution of the Contract. The Contractor shall demonstrate that advance payment has been used in this way by supplying copies of invoices or other documents to the Project Manager.

The advance payment shall be repaid by deducting proportionate amounts from payments otherwise due to the Contractor, following the schedule of completed percentages of the Works on a payment basis. No account shall be taken of the advance payment or its repayment in assessing valuations of work done, Variations, price adjustments, Compensation Events, Bonuses, or Liquidated Damages.

15. Securities

The Performance Security shall be provided to the Procuring Entity no later than the date specified in the Letter of Acceptance and shall be issued in an amount **specified in the SCC,** by a bank or surety acceptable to the Procuring Entity, and denominated in the types and proportions of the currencies in which the Contract Price is payable. The Performance Security shall be valid until a date 28 day from the date of issue of the Certificate of Completion in the case of a Bank Guarantee, and until one year from the date of issue of the Completion Certificate in the case of a Performance Bond.

16. Dayworks

If applicable, the Dayworks rates in the Contractor's Bid shall be used only when the Project Manager has given written instructions in advance for additional work to be paid for in that way.

All work to be paid for as Dayworks shall be recorded by the Contractor on forms approved by the Project Manager. Each completed form shall be verified and signed by the Project Manager within two days of the work being done.

The Contractor shall be paid for Dayworks subject to obtaining signed Dayworks forms.

[13] *The sum of the two coefficients A and B should be 1 (one) in the formula for each currency. Normally, both coefficients shall be the same in the formulae for all*

currencies, since coefficient A, for the non-adjustable portion of the payments, is a very approximate figure (usually 0.15) to take account of fixed cost elements or other non-adjustable components. The sum of the adjustments for each currency are added to the Contract Price.

17. Cost of Repairs

Loss or damage to the Works or Materials to be incorporated in the Works between the Start Date and the end of the Defects Correction periods shall be remedied by the Contractor at the Contractor's cost if the loss or damage arises from the Contractor's acts or omissions.

E. Finishing the Contract

18. Completion

The Contractor shall request the Project Manager to issue a Certificate of Completion of the Works, and the Project Manager shall do so upon deciding that the whole of the Works is completed.

19. Taking Over

The Procuring Entity shall take over the Site and the Works within seven days of the Project Manager's issuing a certificate of Completion.

20. Final Account

The Contractor shall supply the Project Manager with a detailed account of the total amount that the Contractor considers payable under the Contract before the end of the Defects Liability Period. The Project Manager shall issue a Defects Liability Certificate and certify any final payment that is due to the Contractor within 56 days of receiving the Contractor's account if it is correct and complete. If it is not, the Project Manager shall issue within 56 days a schedule that states the scope of the corrections or additions that are necessary. If the Final Account is still unsatisfactory after it has been resubmitted, the Project Manager shall decide on the amount payable to the Contractor and issue a payment certificate.

21. Operating and Maintenance Manuals

If "as built" Drawings and/or operating and maintenance manuals are required, the Contractor shall supply them by the dates **stated in the SCC.**

If the Contractor does not supply the Drawings and/or manuals by the dates **stated in the SCC** pursuant to GCC Sub-Clause 56.1**,** or they do not receive the Project Manager's approval, the Project Manager shall withhold the amount **stated in the SCC** from payments due to the Contractor.

22. Termination

The Procuring Entity or the Contractor may terminate the Contract if the other party causes a fundamental breach of the Contract.

Fundamental breaches of Contract shall include, but shall not be limited to, the following:

a) the Contractor stops work for 30 days when no stoppage of work is shown on the current Program and the stoppage has not been authorized by the Project Manager;
b) the Project Manager instructs the Contractor to delay the progress of the Works, and the instruction is not withdrawn within 30 days;
c) the Procuring Entity or the Contractor is made bankrupt or goes into liquidation other than for a reconstruction or amalgamation;
d) a payment certified by the Project Manager is not paid by the Procuring Entity to the Contractor within 84 days of the date of the Project Manager's certificate;
e) the Project Manager gives Notice that failure to correct a particular Defect is a fundamental breach of Contract and the Contractor fails to correct it within a reasonable period of time determined by the Project Manager;
f) the Contractor does not maintain a Security, which is required;
g) the Contractor has delayed the completion of the Works by the number of days for which the maximum amount of liquidated damages can be paid, as **defined in the SCC**; or
h) if the Contractor, in the judgment of the Procuring Entity has engaged in Fraud and Corruption, as defined in paragraph 2.2 a of the Appendix A to the GCC, in competing for or in executing the Contract, then the Procuring Entity may, after giving fourteen (14) days written notice to the Contractor, terminate the

Contract and expel him from the Site.

Notwithstanding the above, the Procuring Entity may terminate the Contract for convenience.

If the Contract is terminated, the Contractor shall stop work immediately, make the Site safe and secure, and leave the Site as soon as reasonably possible.

When either party to the Contract gives notice of a breach of Contract to the Project Manager for a cause other than those listed under GCC Sub-Clause 56.2 above, the Project Manager shall decide whether the breach is fundamental or not.

23. Payment upon Termination

If the Contract is terminated because of a fundamental breach of Contract by the Contractor, the Project Manager shall issue a certificate for the value of the work done and Materials ordered less advance payments received up to the date of the issue of the certificate and less the percentage to apply to the value of the work not completed, as **specified in the SCC.** Additional Liquidated Damages shall not apply. If the total amount due to the Procuring Entity exceeds any payment due to the Contractor, the difference shall be a debt payable to the Procuring Entity.

If the Contract is terminated for the Procuring Entity's convenience or because of a fundamental breach of Contract by the Procuring Entity, the Project Manager shall issue a certificate for the value of the work done, Materials ordered, the reasonable cost of removal of Equipment, repatriation of the Contractor's personnel employed solely on the Works, and the Contractor's costs of protecting and securing the Works, and less advance payments received up to the date of the certificate.

24. Property

All Materials on the Site, Plant, Equipment, Temporary Works, and Works shall be deemed to be the property of the Procuring Entity if the Contract is terminated because of the Contractor's default.

25. Release from Performance

If the Contract is frustrated by the outbreak of war or by any other event entirely outside the control of either the Procuring Entity or the Contractor, the Project Manager shall certify that the Contract has been frustrated. The Contractor shall make the Site safe and stop work as quickly as possible after receiving this certificate and shall be paid for all work carried out before receiving it and for any work carried out afterwards to which a commitment was made.

SECTION IX - SPECIAL CONDITIONS OF CONTRACT

Except where otherwise specified, all Special *Conditions of Contract should be filled in by the Procuring Entity prior to issuance of the bidding document. Schedules and reports to be provided by the Procuring Entity should be annexed.*

GCC Clause	1. General
GCC 1.1 (r)	The Procuring Entity's is: **DIRECTOR (RAM)** ***KENYA RURAL ROADS AUTHORITY-VIHIGA REGION P.O BOX 48151-00100 MARAGAOLI***
GCC 1.1 (V)	The intended completion date for the whole of the works shall be *[insert date]* ***Three months***
GCC 1.1 (Y)	The project Manager is : **DEPUTY DIRECTOR** ***KENYA RURAL ROADS AUTHORITY-VIHIGA REGION P.O BOX 1251-50300 MARAGAOLI***
GCC 1.1 (aa)	The site is located at : *[insert address of site]* and is defined in drawings no : ***[as per the attached in the specifications and drawings]***
GCC 1.1 (dd)	The start date shall be: *[insert date]* ***signing of the contract***
GCC 1.1 (hh)	The works consist of : ***Grading and graveling works , culvert installations***
GCC 2.2	Sectional completion are: *[insert nature and dates, if appropriate]***N/A**
GCC 5.1	The project Manager ***[may]*** delegate any of his duties and responsibilities
GCC 8.1	Schedule of other contractors: *[insert scheduled of others Contractors if appropriate]*
GCC 9.1	**Key Personnel** GCC 9.1 is replaced with the following 9.1 Key personnel are the contractor's personnel named in this GCC 9.1 of the special conditions of contracts shall employ the key personnel and use the equipment identified in this bid, to carry out the works or other personnel and use the equipment approved by the project manager. The project manager shall approve any proposed replacement of key personnel and equipment only if their relevant qualifications and characteristics are substantially equal or better than those proposed in the bid. [Insert the name/s of each key personnel agreed by the procuring entity pripr to contract signature.
GCC 13.1	The minimum insurance amount and deducible shall be*:* *i.* For loss or damage to the works, plant and ,materials/ *[insert amount]* *ii.* For loss or damage to equipment [*insert amounts]* *iii.* For loss or damage to property *(except the works, plant, materials and Equipment)* in connection with contract *[insert amount]* iv. For personal injury or death *1.* Of the contractor's employees*:* [amount] *2.* Of other people: *[amount]*
GC C 14.1	Site Data are: *[list Site Data}*
GC C 20.1	The Site Possession Date(s) shall be: *[insert location(s) and date(s)J*
GC C 23.1 & **GC C 23.2**	Appointing Authority for the Adjudicator: *[insert name of Authority]*.
GC C 24.3	Hourly rate and types of reimbursable expenses to be paid to the Adjudicator: *[Insert hourly fees and reimbursable expenses}.*
	B. Time Control
GC C 26.1	The Contractor shall submit for approval a Program for the Works within *[Number}* days from the date of the Letter of Acceptance.

GCC 26.3	The period between Program updates is *[insert number]* days. The amount to be withheld for late submission of an updated Program is *[insert amount}.*
	C. Quality Control
GCC 34.1	The Defects Liability Period is: *[insert number]* days. *[The Defects Liability Period is usually limited to 12 months, but could be less in very simple cases}*
	D. Cost Control
GCC 38.7	If the value engineering proposal is approved by the Procuring Entity the amount to be paid to the Contractor shall be _% *(insert appropriate percentage. The percentage is normally up to 50%)* of the reduction in the Contract Price.
GCC 44.1	The currency of the Procuring Entity's Country is: *[insert name of currency of the* Procuring Entity's Country}.
GCC 45.1	The Contract *[insert "is" or "is not"}* subject to price adjustment in accordance with GCC Clause 45, and the following information regarding coefficients *[specify "does" or "does not"}* apply. *[Price adjustment is mandatory for contracts which provide for time of completion exceeding 18 months]* The coefficients for adjustment of prices are: (a) *[insert percentage]* percent nonadjustable element (coefficient A).(b) *[Insert percentage}* percent adjustable element (coefficient B). (c) The Index I for shall be *[insert index].*
GCC 46.1	The proportion of payments retained is: *[insert percentage}* ***8%*** *[The retention amount is usually close to 5 percent and in no case exceeds 10 percent.}*
GCC 47.1	The liquidated damages for the whole of the Works are ***[8% of the Contract Price}*** per day. The maximum amount of liquidated damages for the whole of the Works is *[insert percentage]* of the final Contract Price. *[Usually liquidated damages are set between 0.05 percent and 0.10 percent per day, and the total amount is not to exceed between 5 percent and 10 percent of the Contract Price .lf Sectional Completion and Damages per Section have been agreed, the latter should be specified here}*
GCC 48.1	The Bonus for the whole of the Works is *[insert percentage of final Contract Price}* per day. The maximum amount of Bonus for the whole of the Works is *[insert percentage}* of the final Contract Price. *[If early completion would provide benefits to the* Procuring Entity, *this clause should remain; otherwise delete. The Bonus is usually numerically equal to the liquidated damages.}*
GCC 49.1	The Advance Payments shall be: *[insert amount(s)}* and shall be paid to the Contractor no later than *[insert date(s)}.**N/A***
GCC 50.1	The Performance Security amount is *[insert amount(s) denominated in the types and proportions of the currencies in which the Contract Price is payable, or in a freely convertible currency acceptable to the* Procuring Entity] (a) Performance Security - Bank Guarantee: in the amount(s) of *[insert related figure(s)}* percent of the Accepted Contract Amount and in the same currency (ies) of the Accepted Contract Amount. (b) Performance Security - Performance Bond: in the amount(s) of *[insert related figure(s)* percent of the Accepted Contract Amount and in the same currency (ies) of the Accepted Contract Amount.
	E. Finishing the Contract
GCC	The date by which operating and maintenance manuals are required is *[insert date].*

56.1	The date by which "as built" drawings are required is *[insert date]* .
GCC 56.2	The amount to be withheld for failing to produce "as built" drawings and/or operating and maintenance manuals by the date required in GCC 58.1 is *[insert amount in local currency]*.
GCC 57.2 (g)	The maximum number of days is: *[insert number; consistent with Clause 47.1 on liquidated damages]*.
GCC 58.1	The percentage to apply to the value of the work not completed, representing the Procuring Entity's additional cost for completing the Works, is *[insert percentage}*.

FORM No 1: NOTIFICATION OF INTENTION TO AWARD

This Notification of Intention to Award shall be sent to each Tenderer that submitted a Tender. Send this Notification to the Tenderer's Authorized Representative named in the Tender Information Form on the format below.

FORMAT

1. For the attention of Tenderer's Authorized Representative
   - *i)* Name: *[insert Authorized Representative's name]*
   - *ii)* Address: *[insert Authorized Representative's Address]*
   - *iii)* Telephone: *[insert Authorized Representative's telephone/fax numbers]*
   - *iv)* Email Address: *[insert Authorized Representative's email address]*

   [IMPORTANT: insert the date that this Notification is transmitted to Tenderers. The Notification must be sent to all Tenderers simultaneously. This means on the same date and as close to the same time as possible.]

2. Date of transmission: [*email*] on [*date*] (local time)

   This Notification is sent by (*Name and designation*) _____

3. Notification of Intention to Award

   - *i)* Procuring Entity: *[insert the name of the Procuring Entity]*
   - *ii)* Project: *[insert name of project]*
   - *iii)* Contract title: *[insert the name of the contract]*
   - *iv)* Country: *[insert country where ITT is issued]*
   - *v)* ITT No: *[insert ITT reference number from Procurement Plan]*

   This Notification of Intention to Award (Notification) notifies you of our decision to award the above contract. The transmission of this Notification begins the Standstill Period. During the Standstill Period, you may:

4. Request a debriefing in relation to the evaluation of your tender

   Submit a Procurement-related Complaint in relation to the decision to award the contract.

   a) The successful tenderer
      - i) Name of successful Tender: _____
      - ii) Address of the successful Tender : _____
      - iii) Contract price of the successful Tender Kenya Shillings _____ (in words) _____ _____

   b) Other Tenderers

   Names of all Tenderers that submitted a Tender. If the Tender's price was evaluated include the evaluated price as well as the Tender price as read out. For Tenders not evaluated, give one main reason the Tender was unsuccessful.

S.No.	**Name of Tenderer**	**Tender Price as read out**	**Evaluated Tender price (Note a**	**One reason why not evaluated**
1				
2				
3				
4				
5				

(Note a) State NE if not evaluated

5. How to request a debriefing

a) DEADLINE: The deadline to request a debriefing expires at midnight on [*insert date*] (*local time*).

b) You may request a debriefing in relation to the results of the evaluation of your Tender. If you decide to request a debriefing your written request must be made within three (5) Business Days of receipt of this Notification of Intention to Award.

c) Provide the contract name, reference number, name of the Tenderer, contact details; and address the request for debriefing as follows:

i) Attention: [*insert full name of person, if applicable*]

ii) Title/position: [*insert title/position*]

ii) Agency: [*insert name of Procuring Entity*]

iii) Email address: [*insert email address*]

d) If your request for a debriefing is received within the 3 Days deadline, we will provide the debriefing within five (3) Business Days of receipt of your request. If we are unable to provide the debriefing within this period, the Standstill Period shall be extended by five (3) Days after the date that the debriefing is provided. If this happens, we will notify you and confirm the date that the extended Standstill Period will end.

e) The debriefing may be in writing, by phone, video conference call or in person. We shall promptly advise you in writing how the debriefing will take place and confirm the date and time.

f) If the deadline to request a debriefing has expired, you may still request a debriefing. In this case, we will provide the debriefing as soon as practicable, and normally no later than fifteen (15) Days from the date of publication of the Contract Award Notice.

6. How to make a complaint

a) Period: Procurement-related Complaint challenging the decision to award shall be submitted by midnight, [*insert date*] (local time).

b) Provide the contract name, reference number, name of the Tenderer, contact details; and address the Procurement-related Complaint as follows:

i) Attention: [*insert full name of person, if applicable*]

ii) Title/position: [*insert title/position*]

iii) Agency: [*insert name of Procuring Entity*]

iv) Email address: [*insert email address*]

c) At this point in the procurement process, you may submit a Procurement-related Complaint challenging the decision to award the contract. You do not need to have requested, or received, a debriefing before making this complaint. Your complaint must be submitted within the Standstill Period and received by us before the Standstill Period ends.

d) Further information: For more information refer to the Public Procurement and Disposals Act 2015 and its Regulations available from the Website info@ppra.go.ke or complaints@ppra.go.ke.

You should read these documents before preparing and submitting your complaint.

e) There are four essential requirements:

i) You must be an 'interested party'. In this case, that means a Tenderer who submitted a Tender in this tendering process, and is the recipient of a Notification of Intention to Award.

ii) The complaint can only challenge the decision to award the contract.

iii) You must submit the complaint within the period stated above.

iv) You must include, in your complaint, all of the information required to support your complaint.

7. Standstill Period

i) DEADLINE: The Standstill Period is due to end at midnight on [*insert date*] (local time).

ii) The Standstill Period lasts ten (14) Days after the date of transmission of this Notification of Intention to Award.

iii) The Standstill Period may be extended as stated in paragraph Section 5 (d) above.

If you have any questions regarding this Notification please do not hesitate to contact us. On behalf of the Procuring Entity:

***Signature:*_____ *Name:*_____**

Title/position:_____ Telephone:__ Email: _____

FORM NO 2: NOTIFICATION OF AWARD - LETTER OF ACCEPTANCE

[letterhead paper of the Procuring Entity] [date]

To: *[name and address of the Contractor]*

This is to notify you that your Tender dated *[date]* for execution of the *[name of the Contract and identification number, as given in the Contract Data]* for the Accepted Contract Amount *[amount in numbers and words] [name of currency]*, as corrected and modified in accordance with the Instructions to Tenderers, is hereby accepted by …… (*name of Procuring Entity).*

You are requested to furnish the Performance Security within 30 days in accordance with the Conditions of Contract, using, for that purpose, one of the Performance Security Forms included in Section VIII, Contract Forms, of the Tender Document.

Authorized Signature:.....

Name and Title of Signatory:.....

Name of Procuring Entity.....

Attachment: *Contract Agreement*.....

FORM NO 3: CONTRACT AGREEMENT

THIS AGREEMENT made the_____day of_____, 20___, between _____of _____ (hereinafter "the Procuring Entity"), of the one part, and_____of_____(hereinafter "the Contractor"), of the other part:

WHEREAS the Procuring Entity desires that the Works known as_____should be executed by the Contractor, and has accepted a Tender by the Contractor for the execution and completion of these Works and the remedying of any defects therein,

The Procuring Entity and the Contractor agree as follows:

1. In this Agreement words and expressions shall have the same meanings as are respectively assigned to them in the Contract documents referred to.

2. The following documents shall be deemed to form and be read and construed as part of this Agreement. This Agreement shall prevail over all other Contract documents.
   a) the Letter of Acceptance
   b) the Letter of Tender
   c) the addenda Nos_____(if any)
   d) the Special Conditions of Contract
   e) the General Conditions of Contract;
   f) the Specifications
   g) the Drawings; and
   h) the completed Schedules and any other documents forming part of the contract.

3. In consideration of the payments to be made by the Procuring Entity to the Contractor as specified in this Agreement, the Contractor hereby covenants with the Procuring Entity to execute the Works and to remedy defects therein in conformity in all respects with the provisions of the Contract.

4. The Procuring Entity hereby covenants to pay the Contractor in consideration of the execution and completion of the Works and the remedying of defects therein, the Contract Price or such other sum as may become payable under the provisions of the Contract at the times and in the manner prescribed by the Contract.

IN WITNESS whereof the parties hereto have caused this Agreement to be executed in accordance with the Laws of Kenya on the day, month and year specified above.

Signed and sealed by_____(for the Procuring Entity)

Signed and sealed by_____(for the Contractor).

FORM NO. 4 - PERFORMANCE SECURITY

[Option 1 - Unconditional Demand Bank Guarantee]

[Guarantor letterhead]

Beneficiary:_____*[insert name and Address of* Procuring Entity*]* **Date:**_____

_____*[Insert date of issue]*

Guarantor: [*Insert name and address of place of issue, unless indicated in the letterhead]*

1. We have been informed that_____(hereinafter called "the Contractor") has entered into Contract No._____dated_____with (*name of Procuring Entity*)_____(the Procuring Entity as the Beneficiary), for the execution of _____(hereinafter called "the Contract").

2. Furthermore, we understand that, according to the conditions of the Contract, a performance guarantee is required.

3. At the request of the Contractor, we as Guarantor, hereby irrevocably undertake to pay the Beneficiary any sum or sums not exceeding in total an amount of_____(*in words*),[1] such sum being payable in the types and proportions of currencies in which the Contract Price is payable, upon receipt by us of the Beneficiary's complying demand supported by the Beneficiary's statement, whether in the demand itself or in a separate signed document accompanying or identifying the demand, stating that the Applicant is in breach of its obligation(s) under the Contract, without the Beneficiary needing to prove or to show grounds for your demand or the sum specified therein.

4. This guarantee shall expire, no later than the …. Day of ……, 2...…[2], and any demand for payment under it must be received by us at the office indicated above on or before that date.

5. The Guarantor agrees to a one-time extension of this guarantee for a period not to exceed *[six months] [one year]*, in response to the Beneficiary's written request for such extension, such request to be presented to the Guarantor before the expiry of the guarantee."

[Name of Authorized Official, signature(s) and seals/stamps].

Note: *All italicized text (including footnotes) is for use in preparing this form and shall be deleted from the final product.*

[1]*The Guarantor shall insert an amount representing the percentage of the Accepted Contract Amount specified in the Letter of Acceptance, less provisional sums, if any, and denominated either in the currency of the Contract or a freely convertible currency acceptable to the Beneficiary.*

[2]*Insert the date twenty-eight days after the expected completion date as described in GC Clause 11.9. The Procuring Entity should note that in the event of an extension of this date for completion of the Contract, the Procuring Entity would need to request an extension of this guarantee from the Guarantor. Such request must be in writing and must be made prior to the expiration date established in the guarantee.*

FORM No. 5 - PERFORMANCE SECURITY

[Option 2– Performance Bond]

[Note: Procuring Entities are advised to use Performance Security – Unconditional Demand Bank Guarantee instead of Performance Bond due to difficulties involved in calling Bond holder to action]

[Guarantor letterhead or SWIFT identifier code]

Beneficiary:_____*[insert name and Address of* Procuring Entity*]* **Date:** _____*[Insert date of issue]***.**

PERFORMANCE BOND No.:_____

Guarantor: [*Insert name and address of place of issue, unless indicated in the letterhead]*

1. By this Bond_____as Principal (hereinafter called "the Contractor") and_____] as Surety (hereinafter called "the Surety"), are held and firmly bound unto_____] as Obligee (hereinafter called "the Procuring Entity") in the amount of_____for the payment of which sum well and truly to be made in the types and proportions of currencies in which the Contract Price is payable, the Contractor and the Surety bind themselves, their heirs, executors, administrators, successors and assigns, jointly and severally, firmly by these presents.

2. WHEREAS the Contractor has entered into a written Agreement with the Procuring Entity dated the _____day of_____, 20 , for_____in accordance with the documents, plans, specifications, and amendments thereto, which to the extent herein provided for, are by reference made part hereof and are hereinafter referred to as the Contract.

3. NOW, THEREFORE, the Condition of this Obligation is such that, if the Contractor shall promptly and faithfully perform the said Contract (including any amendments thereto), then this obligation shall be null and void; otherwise, it shall remain in full force and effect. Whenever the Contractor shall be, and declared by the Procuring Entity to be, in default under the Contract, the Procuring Entity having performed the Procuring Entity's obligations thereunder, the Surety may promptly remedy the default, or shall promptly:
   1) complete the Contract in accordance with its terms and conditions; or
   2) obtain a tender or tenders from qualified tenderers for submission to the Procuring Entity for completing the Contract in accordance with its terms and conditions, and upon determination by the Procuring Entity and the Surety of the lowest responsive Tenderers, arrange for a Contract between such Tenderer, and Procuring Entity and make available as work progresses (even though there should be a default or a succession of defaults under the Contract or Contracts of completion arranged under this paragraph) sufficient funds to pay the cost of completion less the Balance of the Contract Price; but not exceeding, including other costs and damages for which the Surety may be liable hereunder, the amount set forth in the first paragraph hereof. The term "Balance of the Contract Price," as used in this paragraph, shall mean the total amount payable by Procuring Entity to Contractor under the Contract, less the amount properly paid by Procuring Entity to Contractor; or
   3) pay the Procuring Entity the amount required by Procuring Entity to complete the Contract in accordance with its terms and conditions up to a total not exceeding the amount of this Bond.

4. The Surety shall not be liable for a greater sum than the specified penalty of this Bond.

5. Any suit under this Bond must be instituted before the expiration of one year from the date of the issuing of the Taking-Over Certificate. No right of action shall accrue on this Bond to or for the use of any person or corporation other than the Procuring Entity named herein or the heirs, executors, administrators, successors, and assigns of the Procuring Entity.

6. In testimony whereof, the Contractor has hereunto set his hand and affixed his seal, and the Surety has caused these presents to be sealed with his corporate seal duly attested by the signature of his legal representative, this day___of_ _____20_____.

   SIGNED ON……..…….. on behalfof By_____in the capacity of

   In the presence of

   SIGNED ON……..……..…….. on behalf of By…….. in the capacity of

In the presence of

FORM NO. 6 - ADVANCE PAYMENT SECURITY

[Demand Bank Guarantee]

[Guarantor letterhead]

Beneficiary:_____*[Insert name and Address of* Procuring Entity*]*
Date:_____*[Insert date of issue]*

ADVANCE PAYMENT GUARANTEE No.:_____*[Insert guarantee reference number]* **Guarantor:**

_____**[***Insert name and address of place of issue, unless indicated in the letterhead]*

1. We have been informed that_____(hereinafter called "the Contractor") has entered into Contract No._____*dated*_____with the Beneficiary, for the execution of _____

2. Furthermore, we understand that, according to the conditions of the Contract, an advance payment in the sum _____(*in words*)is to be made against an advance payment guarantee.

3. At the request of the Contractor, we as Guarantor, hereby irrevocably undertake to pay the Beneficiary any sum or sums not exceeding in total an amount of_____(*in words*_____)[1] upon receipt by us of the Beneficiary's complying demand supported by the Beneficiary's statement, whether in the demand itself or in a separate signed document accompanying or identifying the demand, stating either that the Applicant:
   a) has used the advance payment for purposes other than the costs of mobilization in respect of the Works; or
   b) has failed to repay the advance payment in accordance with the Contract conditions, specifying the amount which the Applicant has failed to repay.

4. A demand under this guarantee may be presented as from the presentation to the Guarantor of a certificate from the Beneficiary's bank stating that the advance payment referred to above has been credited to the Contractor on its account number_____at_____.

5. The maximum amount of this guarantee shall be progressively reduced by the amount of the advance payment repaid by the Contractor as specified in copies of interim statements or payment certificates which shall be presented to us. This guarantee shall expire, at the latest, upon our receipt of a copy of the interim payment certificate indicating that ninety (90) percent of the Accepted Contract Amount, less provisional sums, has been certified for payment, or on the _____ day of_____, 2 ,[2] whichever is earlier. Consequently, any demand for payment under this guarantee must be received by us at this office on or before that date.

6. The Guarantor agrees to a one-time extension of this guarantee for a period not to exceed *[six months][one year]*, in response to the Beneficiary's written request for such extension, such request to be presented to the Guarantor before the expiry of the guarantee.

[Name of Authorized Official, signature(s) and seals/stamps]

Note: All italicized text (including footnotes) is for use in preparing this form and shall be deleted from the final product.

---

[1]*The Guarantor shall insert an amount representing the amount of the advance payment and denominated either in the currency of the advance payment as specified in the Contract.*

[2]*Insert the expected expiration date of the Time for Completion. The Procuring Entity should note that in the event of an extension of the time for completion of the Contract, the Procuring Entity would need to request an extension of this guarantee from the Guarantor. Such request must be in writing and must be made prior to the expiration date established in the guarantee.*

FORM NO. 7 - RETENTION MONEY SECURITY

[Demand Bank Guarantee]

[Guarantor letterhead]

Beneficiary: _____*[Insert name and Address of* Procuring Entity*]*

Date:_____*[Insert date of issue]*

Advance payment guarantee no. *[Insert guarantee reference number]*

Guarantor: [*Insert name and address of place of issue, unless indicated in the letterhead]*

1. We have been informed that_____*[insert name of Contractor, which in the case of a joint venture shall be the name of the joint venture]* (hereinafter called "the Contractor") has entered into Contract No. _____*[insert reference number of the contract]* dated_____with the Beneficiary, for the execution of_____*[insert name of contract and brief description of* Works*]* (hereinafter called "the Contract").

2. Furthermore, we understand that, according to the conditions of the Contract, the Beneficiary retains moneys up to the limit set forth in the Contract ("the Retention Money"), and that when the Taking-Over Certificate has been issued under the Contract and the first half of the Retention Money has been certified for payment, and payment of *[*insert the second half of the Retention Money] is to be made against a Retention Money guarantee.

3. At the request of the Contractor, we, as Guarantor, hereby irrevocably undertake to pay the Beneficiary any sum or sums not exceeding in total an amount of *[insert amount in figures]*_____(*[insert amount in words*_____*])*[1] upon receipt by us of the Beneficiary's complying demand supported by the Beneficiary's statement, whether in the demand itself or in a separate signed document accompanying or identifying the demand, stating that the Contractor is in breach of its obligation(s) under the Contract, without your needing to prove or show grounds for your demand or the sum specified therein.

4. A demand under this guarantee may be presented as from the presentation to the Guarantor of a certificate from the Beneficiary's bank stating that the second half of the Retention Money as referred to above has been credited to the Contractor on its account number_____at_____*[insert name and address of Applicant's bank]*.

5. This guarantee shall expire no later than the …..... Day of …..……, 2.....…[2], and any demand for payment under it must be received by us at the office indicated above on or before that date.

6. The Guarantor agrees to a one-time extension of this guarantee for a period not to exceed *[six months] [one year]*, in response to the Beneficiary's written request for such extension, such request to be presented to the Guarantor before the expiry of the guarantee.

[Name of Authorized Official, signature(s) and seals/stamps]

Note: All italicized text (including footnotes) is for use in preparing this form and shall be deleted from the final product.

---

[1]*The Guarantor shall insert an amount representing the amount of the second half of the Retention Money.*

[2]*Insert a date that is twenty-eight days after the expiry of retention period after the actual completion date of the contract. The Procuring Entity should note that in the event of an extension of this date for completion of the Contract, the Procuring Entity would need to request an extension of this guarantee from the Guarantor. Such request must be in writing and must be made prior to the expiration date established in the guarantee.*